SCALE MODEL AIRCRAFT THAT FLY

H. J. TOWNER & HOWARD BOYS

3/-

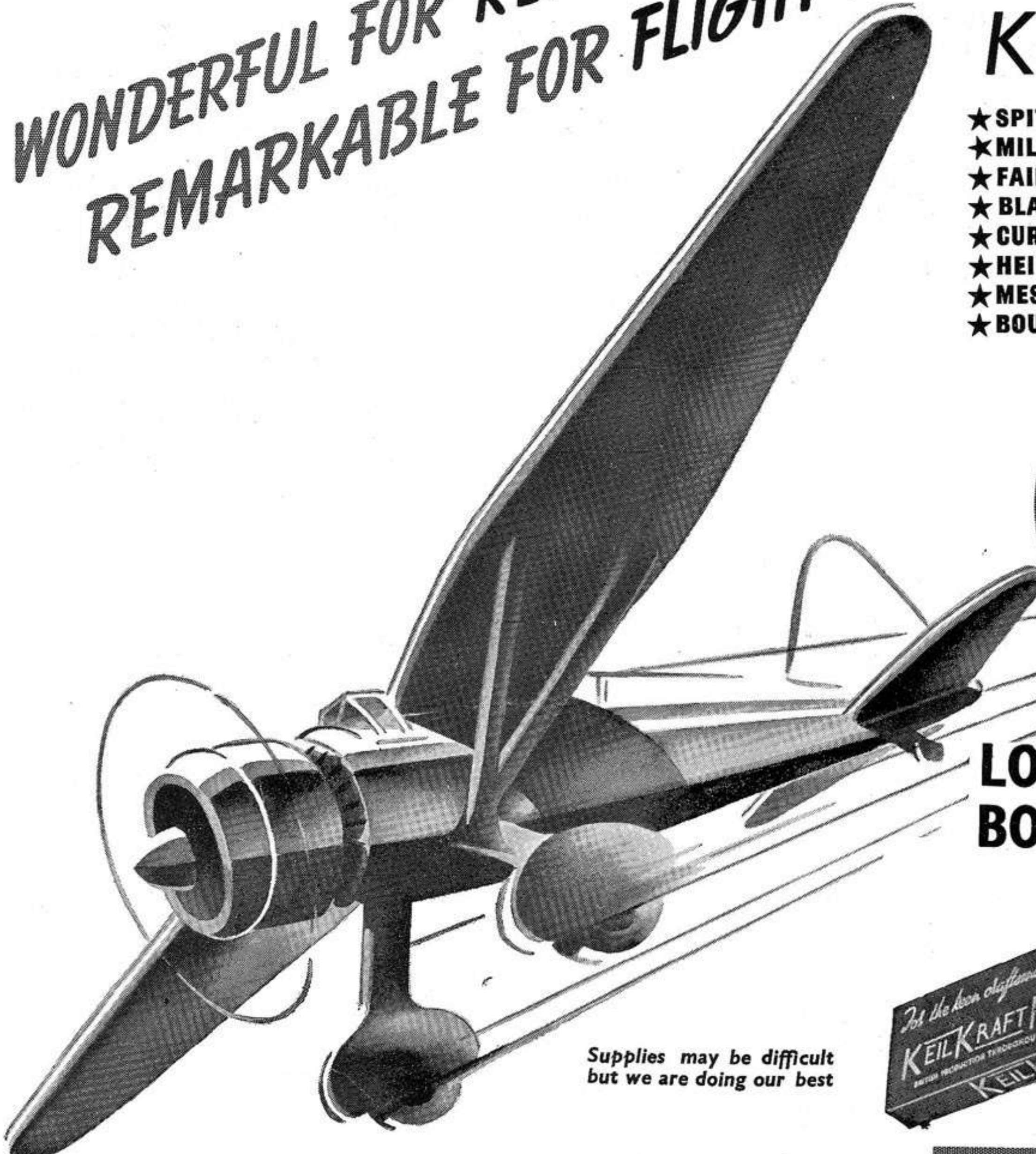


For the keen craftsman
KEILKRAFT KITS
Ajax
EASY TO BUILD
BRITISH PRODUCTION THROUGHOUT
KEILKRAFT KITS

Models that look and fly like the real thing!

For a model to *look* and *fly* like the real thing, it must be reasonably large. These two fine 1 in. scale models combine good flying qualities with true to type appearance, and their large size does not make them cumbersome for travelling, as wings, tail-plane, etc., are all detachable. All materials are included in these absolutely complete kits, and are the finest obtainable. The large, fully detailed plans show all parts clearly and full size, ensuring correct assembly and true construction.

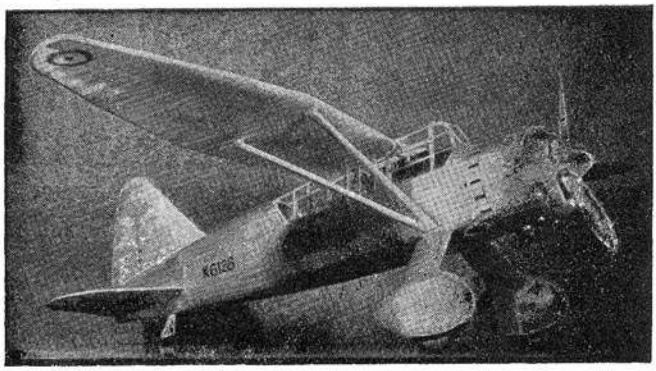

WESTLAND "LYSANDER"
(Designed by HOWARD BOYS)
1 in. scale 50 in. wing span
37/6 carr. paid. Plan alone, **5/-**

Designed by experts, these two proved designs as described in this book will give the utmost satisfaction to the beginner and expert alike. While quite straightforward in construction, they offer ample scope to the expert and lover of detail. When completed they are models to be proud of, and are extremely suitable for exhibition and scale model contests.

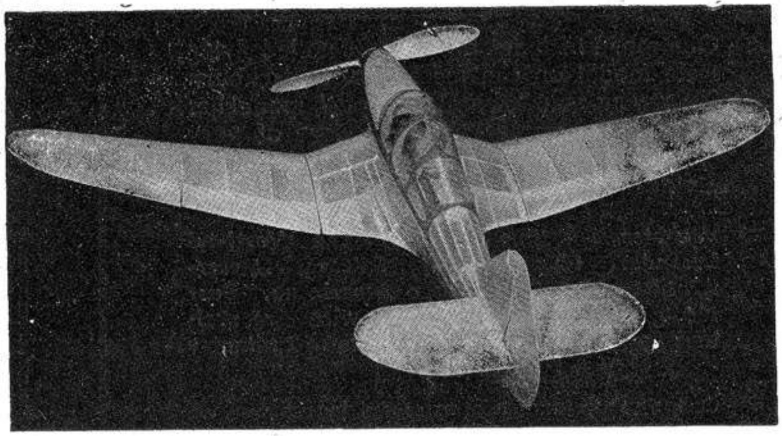

MILES "KESTREL" TRAINER
(Designed by H. J. TOWNER)
1 in. scale 39 in. wing span
27/6 carr. paid. Plan alone, **3/6**

SUPER SCALE KITS, UPPINGHAM, RUTLAND

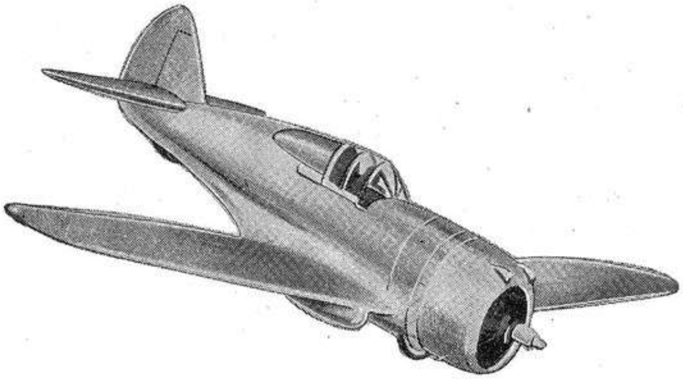

"I was dead on the target . . ."

Make no mistake. The Pilot cannot afford to do so any more than you can when it comes to choosing a kit . . . and the widespread popularity of SKYLEADA kits is your surest guide to the finest possible value to-day.

For a modest outlay you, too, can join the thousands of happy model-builders who always insist on a SKYLEADA Kit. All necessary parts and cement, etc., are included for building the model, with shaped sections ready printed on the wood. Most of the shaping is already done in the non-flying kit. A special feature of all SKYLEADA models is the ease of construction and the clearly-defined drawings.

SKYLEADA MODELS
South End, CROYDON

TRADE ENQUIRIES INVITED.

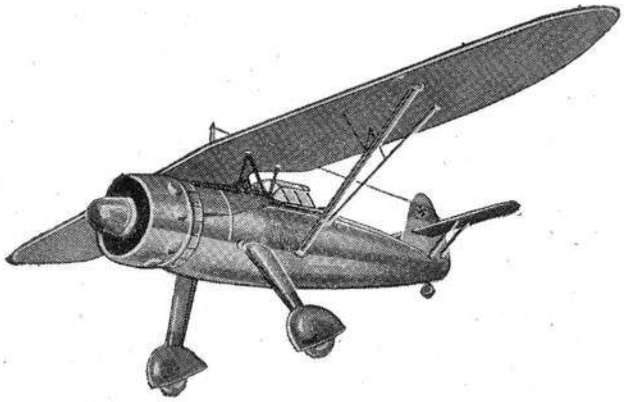

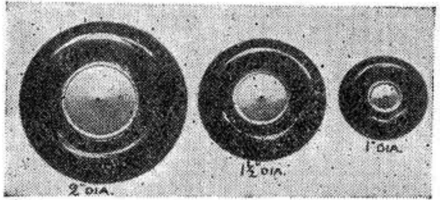
2" DIA.
1½" DIA.
1" DIA.

"All Over the Place"

There are Studiette Agents established in all parts of England, Scotland and Northern Ireland. . . Also in Eire, Canada, Australia, New Zealand, South Africa, India, Burma, Trinidad, Singapore, Bermuda, U.S.A., Argentine, Dutch East Indies, Brazil, Peru, Ceylon, etc.

Such world-wide distribution is fair evidence of the popularity of STUDIETTE PRODUCTS, the demand for which is ever increasing.

Ask for "Studiette Brand" when purchasing YOUR model kits and supplies. . . . . Your satisfaction is ensured as ALL Studiette modelcraft products are sold under guarantee.

There is THE Kit for YOU in the STUDIETTE RANGE of
FLYING SCALE MODEL AIRCRAFT
NON-SCALE DURATION MODEL AIRCRAFT
"SOLID SCALE" DIXON-SCALECRAFT AIRCRAFT
MODERN "WATERLINE" BATTLESHIPS
"OLD TIME" GALLEONS AND SAILING SHIPS

Ask your dealer to show you our lines. If you would like our catalogue, please write to us (enclosing stamp) and giving the name of your usual Model Supply Store.

Studiette
REGISTERED

Model Dept. (SM), Stanley Works, Kent Street
BIRMINGHAM 5, ENGLAND

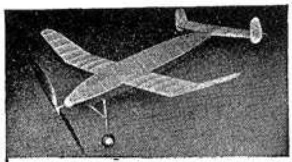

Get Your PANDA To-day
JUST THE MODEL YOU ARE LOOKING FOR

This is the very latest by the designer of the "LYNX," and its success has been remarkable.

Note the original design which is not a rehash of other models. Low frontal area and single wheel undercarriage reducing drag, mid-wing with tip-dihedral for stability. No down-thrust needed. Plan, printed balsa, together with our latest catalogue—price 3/3. Kit to follow shortly. Dimensions: span 39 in., length 30 in., area 144.

SKYLEADA
KEILKRAFT
FROG KITS

Large stock of all the above available by return, from 1/3 plus postage.

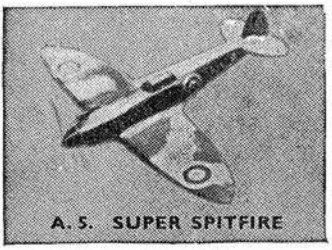

STILL THE LEADER

The M.S.S. **"Lynx."** Price of kit with ready carved propeller, post free, only **18/6**, plans and printed balsa **3/6**. "Lynx Cub," a smaller version of the "Lynx." Price, complete kit, post free, only **10/6**, plans and printed balsa **2/6**.

MODEL SUPPLY STORES
17 BRAZENNOSE STREET
MANCHESTER 2
Also at Kirkhams Bury Old Rd., Prestwich, Manchester

Write for Catalogue 4d. post free

TOWNER **FLYING** BOYS
SCALE SPECIALISTS

We hold a Complete Range of
Kits Designed by These Experts

SPITFIRE · HURRICANE · MESS. 109
HEINKEL · AIRACOBRA · DEFIANT
and
TWO TWIN-ENGINED BOMBERS
BLENHEIM —— HAMPDEN

"CONDOR" LYSANDER, 25 in. span **15/6** Post Free

ATLANTA
KEILKRAFT
SKYLEADA
CLEVELAND
KITS

A TESTED FLYING SCALE MODEL
Renard R 31. Span 30 in.
PLAN ONLY, 1/6
Send 4d. stamp for our Catalogue

BALSA
TISSUE
WIRE
CEMENT
DOPE

Everything for the Solid Model Builder

NORTHERN MODEL AIRCRAFT CO.
— 25 Lower Mosley Street, Manchester 2 —

Made by constructors for constructors —Joy-Plane *better* products enable you to build *better* models!

JOY-PLANE PRODUCTS

Wholesale Enquiries for Special Kit Packs, Midget Tubes, Bottles, Vials, etc., of above lines to Dept. "K"

WING DOPE (clear)	**3½d., 7d., 1/-**
SILK WING DOPE	(approx. ½ pt.) 3/6
BALSA CEMENT	**3½d., 7d., 1/2**
WATERPROOF DOPE	**4½d., 8d.**
FIELD CEMENT	**7d.**
SILVER DOPE	**4d., 7½d., 1/2**
BALSA WOOD GRAIN FILLER	Jars **7½d.**
BANANA OIL (1) Thick	**3½d., 7d., 1/-**
(2) Thin	**3½d., 7d., 1/-**
MODEL DOPES (Opaque Colours), including camouflage, Glossy or Matt, black, white, brown, green, grey, pale blue	**4d., 7½d., 1/2**
RUBBER LUBRICANT	**4d., 8d.**
TISSUE PASTE	**4d., 8d.**
LUMINOUS PAINT, "New Discovery" Brand. Base coat and luminous coat	**1/8, 2/10**
SPECIAL BRUSH CLEANER	**3½d.**

Ask for particulars of export terms, prices, etc.

THE TURNBRIDGE MANUFACTURING & SUPPLY CO. LTD.
52a/62a Longley Road, London, S.W.17

MATA
MODEL AIRCRAFT TRADE ASSOCIATION

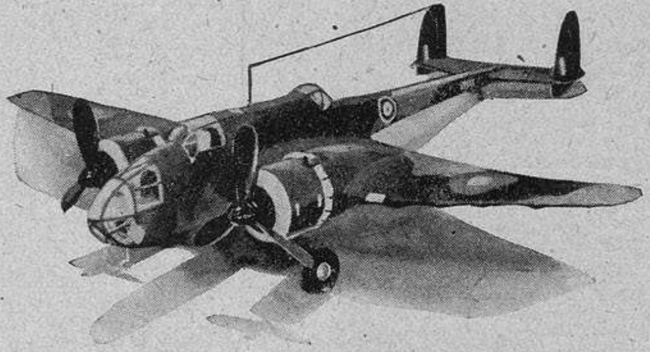

SCALE MODEL AIRCRAFT THAT FLY

BY

H. J. TOWNER and HOWARD BOYS

THE HARBOROUGH PUBLISHING COMPANY LIMITED
ALLEN HOUSE, NEWARKE STREET
LEICESTER

Sole Distributors to the Bookselling Trade—
HORACE MARSHALL AND SON LIMITED
TEMPLE HOUSE, TALLIS STREET
LONDON, E.C.4

MADE AND PRINTED IN ENGLAND BY
THE SIDNEY PRESS LIMITED
SIDNEY ROAD
BEDFORD
1941

SCALE MODEL AIRCRAFT THAT FLY

by

H. J. TOWNER and HOWARD BOYS

CONTENTS

PAGE

CHAPTER I. "RAISON D'ETRE." Thrills of Flight. Recreation 7
,, II. DEFINITION. Scale. Detail in Miniature. Broader Types 9
,, III. AERODYNAMICS. Wing Section. Airflow. C.G. Stability. Thrust. Torque 11
,, IV. DISTRIBUTION OF WEIGHT. Similarity to Prototype. Varying C.G. Position 17
,, V. GEARBOXES. Functions of Gears. Effects on Motor 19
,, VI. DIRECTIONAL CONTROL. Rudder Controls. Counterbalancing Torque 22
,, VII. WING FIXING. Rigidity. Detachability 23
,, VIII. LANDING GEARS. Actions. Retractile Types. Tricycles. Floats and Boats 27
,, IX. RUBBER MOTORS. Quantity. Arrangement. Turns 31
,, X. DESIGN OF AIRSCREWS. How they Work. Pitch and Diameter. Setting Out Blanks 33
,, XI. GENERAL DESIGN. Grades of Balsa. Triangulation. General Notes 37
,, XII. STARTING THE BUILDING. Glueing. Soldering, Etc. 41
,, XIII. FUSELAGES. Types of Structures. Methods of Building. Jigging. Windscreens 43
,, XIV. WINGS. Sections. Spars. Tips. Centre Sections. Fixings ... 51
,, XV. TAIL UNITS. Control Surfaces. Various Attachments 61
,, XVI. CARVING AIRSCREWS. Making Blanks. Cutting from Blanks. Balancing 65
,, XVII. NOSE-PIECES. Gearboxes. Simple Noses. Free-wheels 69
,, XVIII. MOTORS AND FIXINGS. Joining Rubber. Self-Tensioning. Lubrication. Motor Sticks. Adjustable Fixings. Windings. Winders and Counters 75
,, XIX. LANDING GEARS. Methods of Springing. Wheels 83
,, XX. FINISHING. Covering. Doping. Colouring 87
,, XXI. FLYING. Trimming for Glide. Power Flight 91
,, XXII. PHOTOGRAPHING MODELS. By Howard Boys 93

PLANS
De Havilland "T.K.2" 99-101
Gloster "Gladiator" 102-104

CHAPTER I

"RAISON D'ETRE"

THRILLS OF FLIGHT. RECREATION.

WHAT is the urge that makes us want to build and fly model aircraft?

Deep down inside most of us there is a desire to imitate, and in our case the imitation is of some well-known aircraft. Some mechanical device of man's that thrills our imagination, not only in the pleasure we derive from seeing a wonderful piece of mechanism or hearing the roar of the well-tuned engine, but also that perfect thrill of seeing this graceful object of man's inventiveness performing wonderful evolutions in the air and controlled by a perfect and measured sense of rhythm.

Now in our particular hobby, not only do we gratify our desire to imitate, but we go further, we imitate in miniature; anything in miniature always has an appeal of its own, whatever it may be, whether accuracy of detail or delicacy of outline.

Having completed our model, and spent many a happy hour of our winter evenings in doing so, we can stand back and admire our achievement, and the accomplishment of a thing well done gives a great satisfaction.

We must interpose a little note of warning just here. However well the job may be done don't be completely satisfied, but let it urge you on to greater achievements and perhaps more complicated designs, each with its attendant urge to do still better—that is the way to succeed.

But to return to where we were gazing upon our finished work with pride; we now step right out of the imitative sphere, which holds the large majority of people, and rise above them in attempting to impose our will upon Nature; so that our model shall be borne upon the wings of the wind and perform evolutions at our will. Not just a hectic few seconds of undulation in the air, but consistent, steady flight after a snappy take-off from the ground under its own power, and then when the motor has run out, a long, easy, flat glide, a gentle touch down, and the model coming to a rolling stop.

These are thrills which only those who have achieved them can know.

It is because we have enjoyed these thrills that we wish to impart to others some of the knowledge gained both in the workshop and on the flying field, and hope that in so doing we may give many pleasant hours of relaxation to young and old alike.

Then there is the always open field of design, where we can actually design our own models, and, maybe in experimenting and scientific research, introduce to the world some hitherto unknown or undreamt of addition to the sphere of aeronautics.

Remember from the earliest days of human flight those great pioneers first of all experimented with models.

In normal times, too, we have our model aircraft clubs under the auspices of the Society of Model Aeronautical Engineers, who govern the model aircraft movement in this country. With these clubs we have our social side, where all are pals, irrespective of creed or class, each one helping the other, and at the same time a healthy competitive spirit pervading the whole, urging us on to do still better.

What a hobby! What a training for the schoolboy and the young man for after life—not forgetting that the ladies too are keen model-builders—what a recreation for the older man when he seeks to cast aside the trials and worries of workaday life!

Such, then, are the reasons why we build and fly model aircraft.

H. J. TOWNER.
HOWARD BOYS.

January, 1941.

THE AIRSPEED "ENVOY"

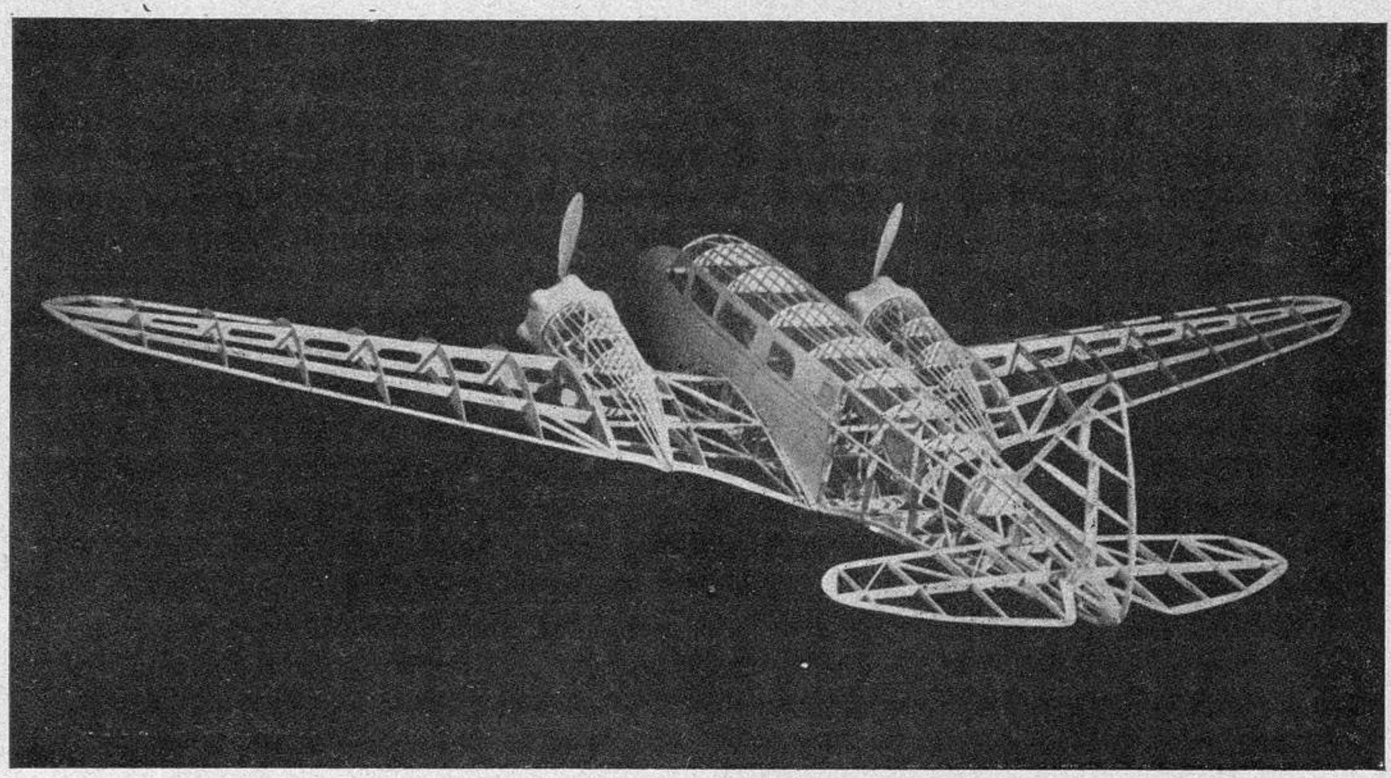

Built by Mr. H. J. Towner, this 1 in. to 1 ft. flying scale model is one of the finest examples of the aero-modeller's skill. Span of the 'plane is 54 in. and length 34½ in. The model will rise off the ground and fly quite a long way.

CHAPTER II

DEFINITION

SCALE. DETAIL IN MINIATURE. BROADER TYPES.

IT may seem at first sight strange to suggest that we should propose discussing the design of scale model flying aircraft.

Surely, says the reader, as the model is a scale reproduction of some particular prototype all the designing was carried out on the actual full-size craft. All we have to do is to reproduce that full-size craft at one-twelfth or one-eighteenth the size, or whatever scale we should decide upon.

We trust, however, that if the reader will peruse these pages he will realize that the design of a scale model is full of all sorts of pitfalls for the unwary, and in fact often is a far greater problem than designing the more usual duration type of model one sees at every model meeting.

And here let us state most emphatically for the benefit of the uninitiated that although we can get splendid realistic flights of quite a high order of duration, yet, owing to the restrictions imposed upon us by a given outline and shape, we are not yet, at any rate, able to compete with the out-and-out duration class of model in length of time and distance flown.

It has already been taken for granted that we have an idea of what a scale model really is—that it is a reproduction of a full-size aircraft only built to a considerably smaller size. For instance, a model built to a scale of one inch to the foot would in reality be one-twelfth the size of the real job in length and wing-span, and so on.

It will readily be seen, however, that it is impracticable to reproduce every detail and every small part in their correct proportion, and so we have to leave the final decision of detail to the builder himself.

Now there are two main types of model both within the scale model category.

Firstly there is the type in which the builder desires to build the most perfect miniature that he can, including parts that are seen and parts that are not seen; every detail that can be incorporated being fitted, even perhaps to a complete motor under the cowling.

Secondly, there is the type of a bolder conception, a type that pleases the eye and expresses the character and individuality of the actual job in a few distinctive parts without all the fuss of detail.

It is " art," only in a different sphere.

We have admired beautiful pen and ink etchings, with every detail the master mind could produce, and we have seen the artist with a few bold strokes of a brush create a picture full of life and vigour.

The one common ground to both these types of expressing our ideas is that our boundary line shall be the same, a wing of a certain plan form, the diameter of an engine cowling or the overall length of the model must be in true proportion to the original.

To those of you who do not possess that instinctive art to know what to put in and what to leave out we would say " leave it out." It will have a much cleaner appearance and look perhaps less like a Christmas tree!

The following method helps. Draw on a piece of cardboard the outline of the model you propose to build, making it the correct size of the finished job—cut this out. You then have a silhouette of the completed job if you hold it up before you.

Now suppose you could see the actual prototype sitting pretty on an airfield. You could walk up to it, holding this silhouette of yours in front of you until you arrived at a position when this card of yours exactly covered the real thing. *Now what you can see of the details of the actual job is what you should incorporate in your model.*

THE MILES "KESTREL" TRAINER

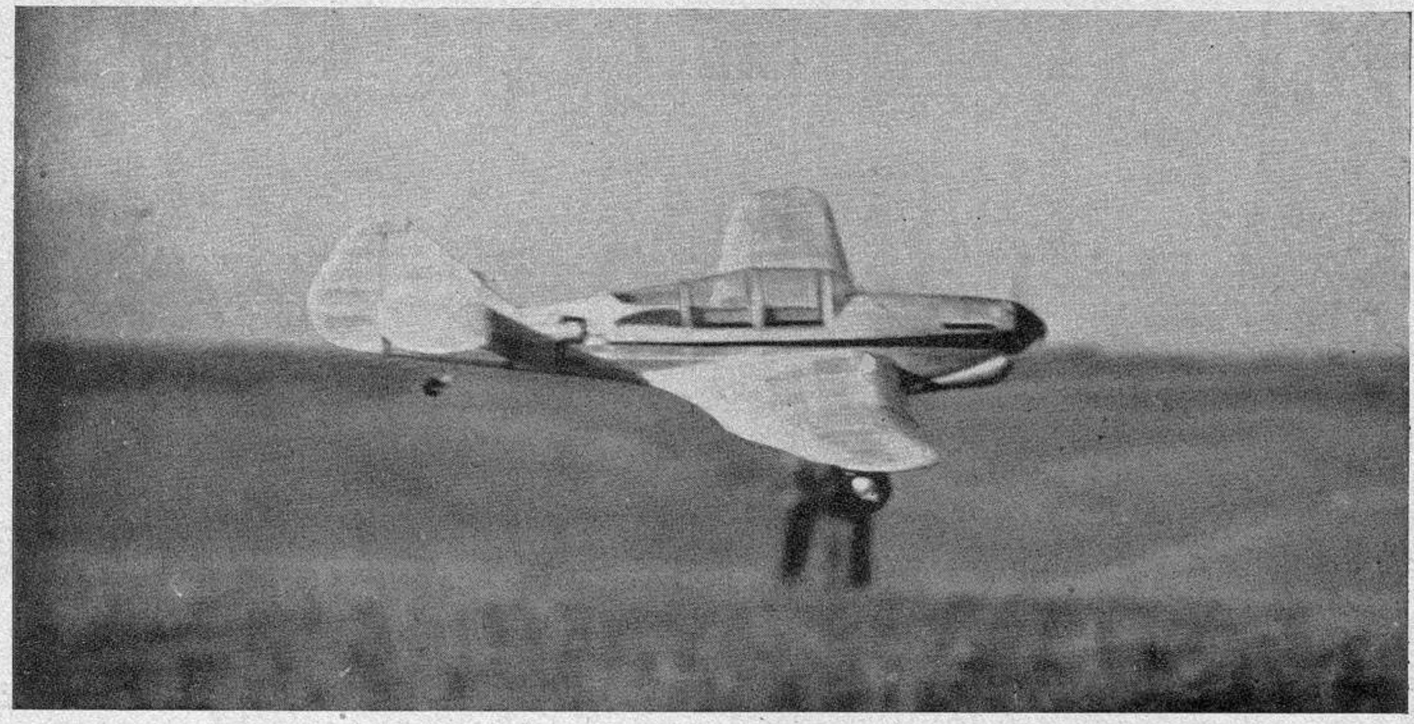

This fine " action photo " shows another of Mr. Towner's models. Span is 39 in. Plans are on page 65.

Don't delay building your model if you are unable to see the actual thing, but this just gives you a shrewd idea of how much to leave out.

Now both these types of model, the fully-detailed and the impressionist type, can be divided again, depending entirely on the builder's wishes. He can build with a view to its exhibition qualities as being pre-eminent, with its flying qualities as a secondary consideration, or he can place performance first and exhibitive qualities second.

Probably the true flying scale model is one in which neither one nor the other quality is subservient. A model in which every characteristic, whether it be likeness to form, style of flight or reasonable duration in the air, are all harmoniously blended in an even proportion, so that we shall not hear such remarks as " a fine performance but a poor finish," or " a wonderful finish but a poor performance."

Chapter III

AERODYNAMICS

WING SECTIONS. AIRFLOW. C.G. STABILITY. THRUST. TORQUE.

When you see the title of Aerodynamics at the head of this chapter please don't turn over a few pages until you come to something more interesting, or what you may imagine will be more interesting! After all, we are dealing with scale model aircraft "*that fly*," and so we must at least know the essentials of flight.

We do not propose delving deeply and mathematically into the subject, so don't be frightened, and, to those of you who have already dug into the subject before, perhaps you *too* may learn something!

As you are all aware, it is the wing that supports the aeroplane in the air. The distance from wing tip to wing tip is called the " span," and the distance from the front or leading edge to the rear or " trailing edge " of the wing is called the " chord." Now if we multiply the " span " by the average chord we get the " area," that is to say the amount of surface available to lift our model, although we must subtract from it the area presented by the body or fuselage, where no lift can occur.

Now suppose our model has an effective wing area of **1** sq. ft., and the model complete weighs **1** lb., we shall have a wing loading of **16** oz. per sq. ft.

Now this figure is far and away too high for our purpose. In fact we should never exceed 8 unless we are designing a machine for speed purposes only. Actually the most suitable ratios lie between $3\frac{1}{2}$ oz. and $7\frac{1}{2}$ oz. per sq. ft. The heavier the wing loading, that is to say the higher the figure, the faster our model will fly. This must be borne in mind when originally laying out our designs if we are to succeed in arranging for our model to fly at a scale speed. Therefore most service type models will be heavier on the wing than light civil and private types.

Now our wing not only has area but it has thickness, and this thickness we design in different shapes, called wing sections.

Each different wing section is designed for a definite purpose, and it is not always possible to discover which wing section is used on any particular prototype, and so we generally use a choice of three or four which we know from experience are suitable for model work.

Now the basic idea underlying all these different wing sections is to create a sufficient lift to fly our model, and at the same time to eliminate as far as possible wind resistance or " drag."

Drag is divided into two parts, " induced " and " parasitic." Induced drag is the price we have to pay for lift, and parasitic drag is due to skin friction, interference between parts close together, projections, and parts not properly streamlined. We cannot get away from induced drag, but the others can be decreased by really smooth surfaces and careful stream lining.

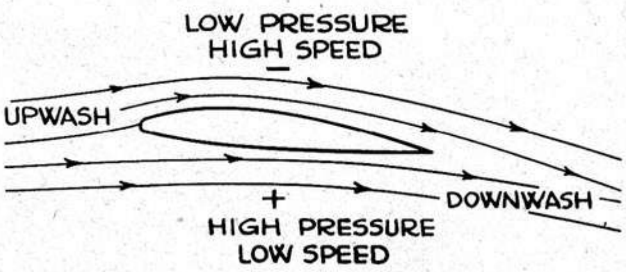

Fig. 1.

Fig. 1 shows a typical wing section, with the air flowing over and under it. You will see that underneath the wing the air pressure is high and the air speed low, while on the top of the wing the pressure is low and the speed high. The air actually has to flow faster over the top surface than under the bottom, as it has farther to go in order to meet the underneath stream of air. It is this low pressure above the wing from which we obtain the greater part of our lift.

Referring again to Fig. 1, we note that the wing section is tilted at an angle to the air flow.

This angle we call the angle of incidence.

Now if we increase this angle we shall get more lift, but at the same time we shall get more drag as well, but usually we arrange for our angle of incidence to lie anywhere between about 3 degrees and 7 degrees incidence.

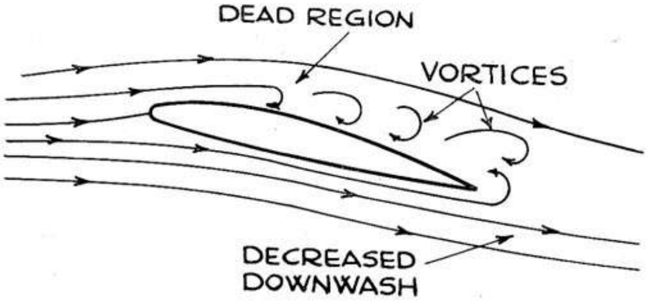

Fig. 2.

When this angle is considerably increased we get an effect as shown in Fig. 2. Here we see that the air flowing over the top surface has broken its flow and does not continue its journey smoothly over the rest of the wing. Here, then, is what we call a " stall." The low pressure has disappeared, and with it our lift, and consequently the wing is not able to support our model in the air, and will not do so until the wing has attained a more normal angle, and even then it will take some time to get into its even flow again.

There are two main types of wing, or aerofoil section, the " high lift " and the " low lift," and they generally correspond to low speed and high speed respectively. That is, the low lift aerofoil has a lower drag at high speed, and therefore assists speed, while the high lift type will carry the same weight at a lower speed, or a greater weight at the same speed, though requiring more power.

Clark Y has always been a favourite with model makers, chiefly because of its shape and its having a flat underside, which is easy to build on a flat surface. The high lift type has become more popular of recent years, especially the section known as R.A.F. 32, particularly for duration models. It is undoubtedly a very good section, and it seems to be the general opinion that its use will result in a flatter glide. Unfortunately it has a slight " undercamber," which makes it more difficult to construct, in that the covering material has to be stuck to the underside of each rib.

" Undercamber " is a term generally used to denote a wing section with a concave bottom surface.

One of the writers prefers this type, while the other writer prefers a lighter model with a lower lift wing section, such as R.A.F. 34 or Gottingen 436. R.A.F. 34 wing section, instead of our " undercamber," has a convex underside, which keeps the centre of pressure down to a narrow limit of movement, and consequently aids stability.

In explaining centre of pressure, it is that point on the wing section where the lift has its greatest effect. Fig. 3 shows how increasing the angle of incidence causes the C.P. (centre of pressure) to travel towards the leading edge, and vice versa.

It can readily be seen that flying on a " bumpy " day, or with only a small amount of wind, the model will be flying through air that contains local disturbances, and the angle of incidence will vary continuously, with a backward and forward movement of the C. of P., and consequent loss of stability.

One comforting thing to know, however, is that if we use a section similar to the prototype we shall be able to make the model fly quite well, though it is possible that a different section would give a slightly better flight. Thick wings are not as good as thin ones from a model point of view, but we need not worry unduly.

Before continuing further, we must deviate to lend a hand to our friend " gravity " and

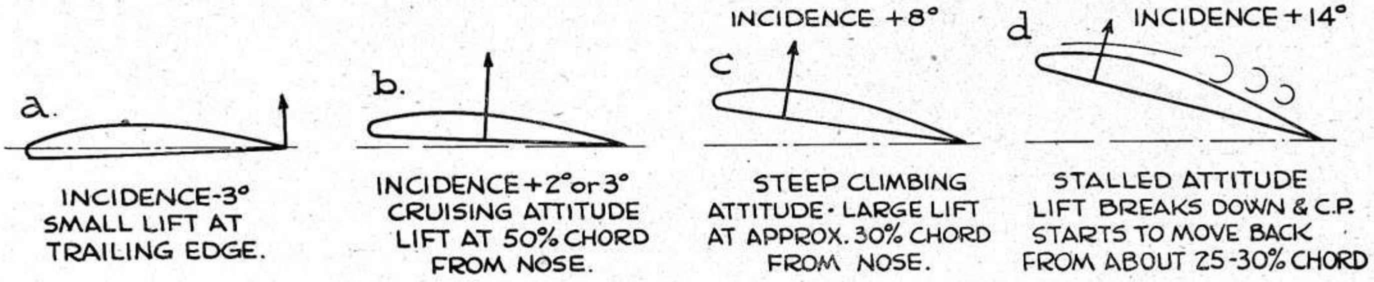

Fig. 3.

bring him into the picture. We may somewhat loosely define the centre of gravity as "that part of the model where gravity has the greatest effect." That is to say, if the C. of G., or centre of gravity, were at the nose of the model, the model would come to earth in a vertical nose-dive; or, if at the tail, the model would come to earth tail first. So you see it is very important where this centre of gravity of ours is placed.

At the same time we should note that the machine will rotate about three axes passing through the C.G., as shown in Fig. 4. The machine can be rotated by disturbances in the air or by the controls. Rolling is corrected with the ailerons by raising or lowering the wings; pitching by the elevators; and yawing with the rudder. Occasionally rolling can be corrected with the rudder. This is done by turning it so that the lower wing is on the outside of the turn, and thus goes faster, which increases its lift.

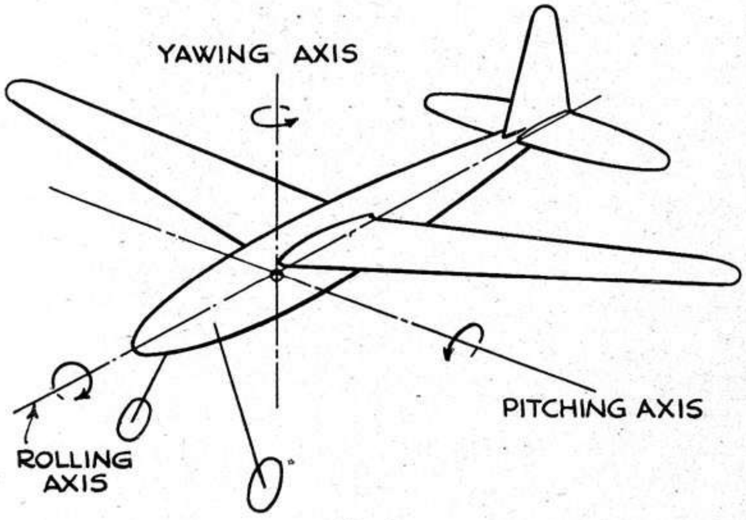

Fig. 4.

The usual method adopted to maintain stability is based on placing the C.G. in such a way that the wing moment is always positive (climbing) or negative (diving).

Let us take the latter case first. Fig. 5a shows that the wing moment, which is negative (diving) can be balanced by a tail moment that will raise the nose (a climbing or positive moment). In other words, if we place the C.G. at from one-quarter to one-third of the mean chord from the leading edge, and mount a tail-plane fitted with a symmetrical section placed at a small negative angle of incidence, which will experience a down load, we can achieve stability.

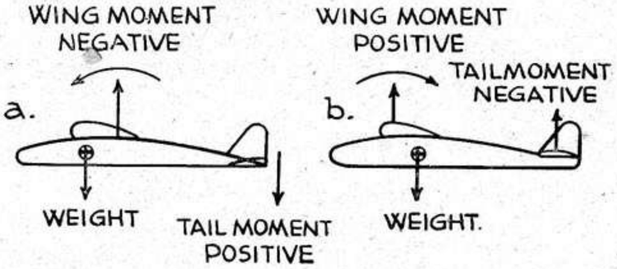

Fig. 5.

Now take the former case. Fig. 5b shows that the wing moment, which is positive (climbing) can be balanced by a tail moment that will depress the nose (a diving or negative moment). In other words, if we place the C.G. at the trailing edge and mount a tail-plane fitted with a normal section so that it will produce lift, we can achieve stability.

Actually the only arrangement used on normal full-sized aeroplanes is the symmetrical section, and if we are to conform as nearly as possible to the real thing this is the type of tail to use. The symmetrical section (sometimes called non-lifting), like R.A.F. 30, is used to give sometimes a positive and sometimes a negative moment.

However, there are times when the C.G. may become too far back, owing perhaps to bad design, faulty workmanship or badly chosen prototype; when the fitting of a (lifting) section like Clark Y may get us out of our troubles.

Having arrived as far as the tail, let us consider the functions of the fin.

The well-known weathercock shows the general principle, which is based on the fact that it always places itself parallel to the airstream. This is achieved very simply by arranging more area behind the turning axis. The same argument applies to the aeroplane, full-size or model. We want the model to head into the relative wind (which is not necessarily the direction of the wind as seen from the ground). This is particularly important when the model starts a side-slip. In that case one wing will be lower than the other and the model will skid in the direction as shown in Fig. 6.

The air will now strike the rudder or fin at a small angle, which turns the model into the wind.

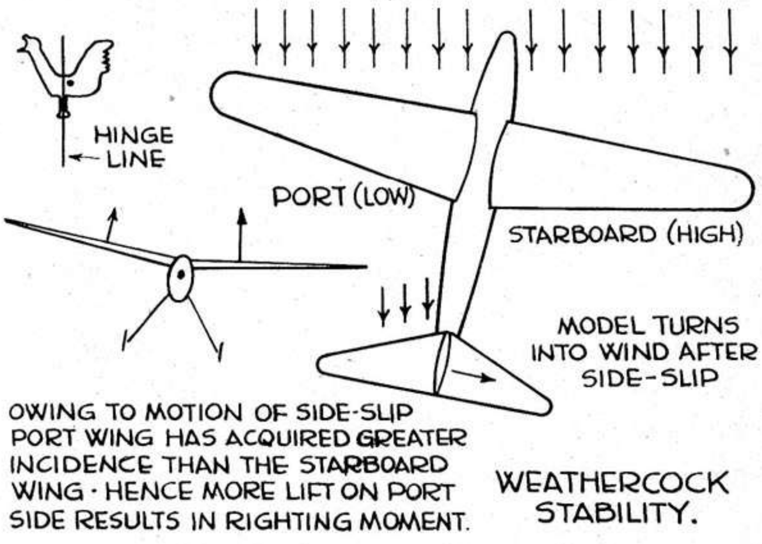

Fig. 6.

If the area is not distributed so that its centre is situated well behind the hinged line the model will not show this weathercock action and the slip will not be corrected, with the result that it will probably stall and spin into the ground.

On the other hand, if the area behind the centre of gravity is too great there will be a danger of the model being forced into a spiral which gradually tightens until it dives into the ground. Obviously it will be caused by a fin that is too large.

We have included this brief treatise on the fin as, although on the full-size craft the size is determined for us, yet it is sometimes advisable to increase this area somewhat. Where, however, the shape of the fuselage is of the box type variety the fin as a rule is quite adequate in area, but where the fuselage is of a round or oval section the side area behind the hinge line or turning axis does not offer such an effective weathercock effect, and so the fin has to be increased slightly, say, by 7 to 10 per cent.

With regard to the tail or elevator, this can sometimes remain the same area as the prototype, although a slight increase can be of advantage to counteract the pitching movement which normally would be controlled by the pilot himself.

So far we have merely considered the model as gliding, but when we come to power our model two more factors step into the picture, "thrust" and "torque."

Thrust is the force that pulls the model through the air. In the case of the rubber-driven model it has a maximum value at the beginning of the flight, and decreases fairly rapidly as the motor runs out. It is obvious that the thrust will supply a moment round the C. of G. in all cases when it does not pass through it.

Now let us study the sketches in Fig. 7. In case " a " the C. of G. lies high and the thrust line is placed low, as shown by the full line; the thrust will tend to raise the nose of the model and make it climb.

This can be demonstrated by drawing a similar figure and fastening it by means of a drawing pin through the C. of G. If one pulls in the direction of the full line the nose will tend to rise, that is, it will increase its angle of incidence.

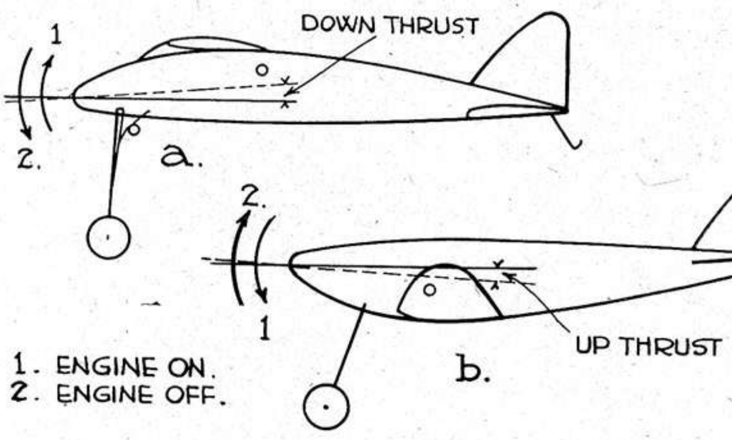

Fig. 7.

This may be too much and the model will stall; therefore we try to choose the thrust moment in such a way that it will just supply the amount of climbing moment that we want without stalling. In order to do this we apply what is termed "downthrust," that is, we tilt our thrust line downwards slightly by one or two degrees so that the initial burst of power from our motor will not raise the nose too high.

We will now turn to case (*b*), Fig. 7, which is the opposite to case (*a*). The thrust line, running as in the full line, will make the model dive with the motor on, and so we employ upthrust. It would be still better to rearrange the lay-out so that the thrust does not supply quite such a large diving moment.

Now this is very important. In the glide we arrange for stability and direction by means of the elevator and rudder, *and this trim must not be changed.*

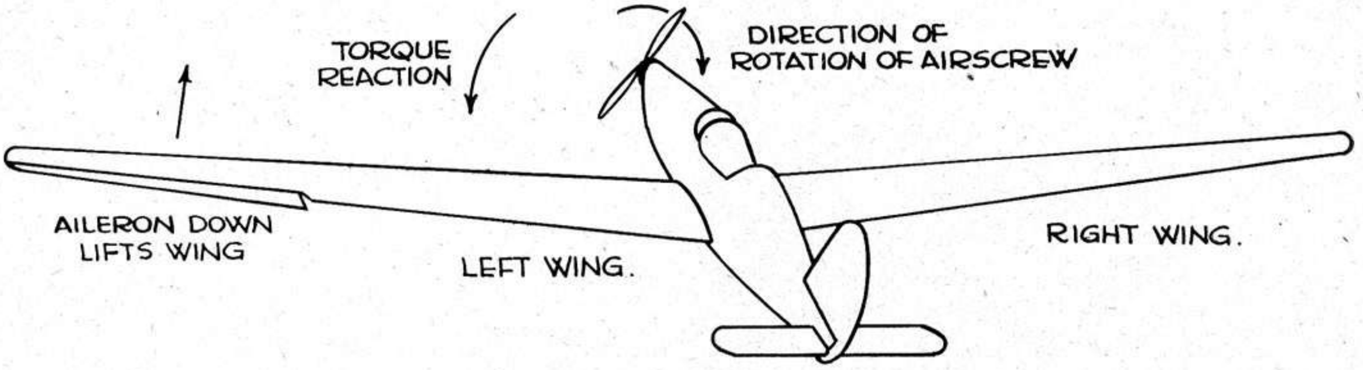

Fig. 8.

Climb and power flight must be obtained by the proper use of downthrust, so that when the power has run out the gliding characteristics come into their own and bring the model safely down.

The torque of the airscrew is the equivalent of the drag of the wing, and is opposed to the direction of motion. In other words, if an airscrew runs clockwise *when seen from behind*, the torque will be anti-clockwise and the model will tend to lower the left wing (Fig. 8). We must look for a means to counteract this torque, for it may put the model into a tight bank, so that it will be prevented from climbing, or may even dive into the ground. (Fortunately for us, however, we are only dealing with scale models, which haven't such a terrific amount of torque to be controlled. The duration people have to deal with very large propellers and much more power!)

As the torque supplies a rolling moment it will be logical to counteract it by another rolling moment; in other words, if we use

" aileron " control we correct this bank, but as the power decreases the model will be banked in the opposite way. However, if we use a light " aileron " control, i.e. depress the left wing aileron to raise the left wing very gently and then allow the model to circle with the torque, that is to the left with the power on, the sting will be taken out of the torque, and when the power dies away the model will gently bank towards the right.

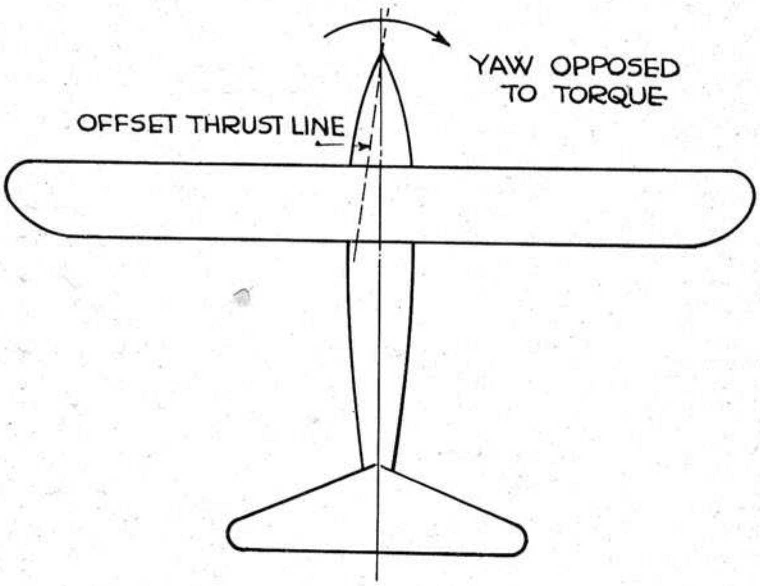

Fig. 9.

However, probably the best method of all is to offset the thrust line slightly so that the thrust tends to pull the model to the right, and when the power dies down the model takes up its normal flying direction. See Fig. 9.

Now in this treatise on aerodynamics there is also the question of dihedral to consider.

Dihedral is the " V "-shaped angle between the wings as viewed from the front or behind; in other words, the wing tips are higher than the base or root of the wings.

The theory of this dihedral is the fact that when one half of the wing drops owing to some disturbance in the air the model will start a side-slip or skid.

The lower wing will now have a greater incidence to the air stream than the other wing. The lift on the former will therefore be greater, with the result that the lower wing will now rise and the model be brought back to an even keel again.

Too little dihedral will cause the model to slip and skid all over the sky, whereas too much dihedral will cause the model to rock from side to side.

Now dihedral is incorporated to a greater or lesser degree in most full-size aircraft, but from the aero-modeller's point of view we shall generally have to increase it slightly, especially if the model happens to be a low-wing type or the motor develops a lot of torque.

The " first-timer " is advised to increase tail areas anything up to 10 per cent, and dihedral a few degrees, say up to five, but with experience these can be reduced even to scale dimensions in some cases. As a general guide, these increases are more necessary in high performance and high-speed prototypes than in the case of light aeroplanes of the private owner class.

It must always be remembered in model-work that we have no pilot to correct the machine in flight, so we have to arrange for the model to be more stable and less sensitive than the full-size aircraft; although, of course, there are real aircraft that will almost fly themselves, and in fact fly *better* by themselves than when a ham-handed fellow takes charge!

Let us hope by now you have digested the foregoing chapter and have a fair idea of the reasons of it all; also that you will realise that the building and flying of scale model aircraft is not just a slavish copy of the real thing.

In fact the more we build and fly these miniature 'planes the more we realise that scale-model flying is a worth-while job where we can let our ingenuity play to the full in incorporating these ideas of stability without detracting from the appearance and scale of the original.

CHAPTER IV

DISTRIBUTION OF WEIGHT

SIMILARITY TO PROTOTYPE. VARYING C.G. POSITION.

LET us suppose it were possible for an owner-pilot of a full-size craft to say to himself, " I am fed up with my engine and all its complications; I will scrap it. But in order to get motive power I will install a rubber motor like the aero-modellers do." Supposing it were faintly possible, let us see what would happen to his distribution of weights.

First of all he would take out his engine, a total weight of, say, three hundred pounds, from the front of the machine, and he would proceed to hook a tremendous number of rubber skeins to his propeller shaft and stretch them right aft to somewhere above his tail wheel; and what would be the result?

His distribution of weight is entirely altered. Even assuming that there would be the same amount of rubber motor in front of the centre of gravity as there would be behind, so that these two weights cancelled out, there would still be the fact that the three hundred pounds of motor was not where it was in the nose. Attempting to fly a craft in this condition would be like throwing an arrow or a dart with the feathers in front and expecting it to continue in that attitude!

The aeroplane simply would not fly.

But that is the approximate state of a model if we merely copied the prototype and did not rearrange the distribution of weights.

If we wished to suspend a correctly built model from the ceiling on a strong thread we should find that we should have to attach this thread to the 'plane at a point one-quarter to one-third of the way back from the leading edge of the wing along the centre line of the fuselage. The 'plane would then assume a normal flying position, that is to say, parallel to the ground.

Actually, of course, this only applies to a wing whose leading edge or trailing edge does not sweep forwards or backwards. If either or both did we should have to find the " mean " one-third back from the leading edge of the whole wing. The whole point is that the centre of gravity should lie on this line. (See the chapter on Aerodynamics, Fig. 5a.

Actually, of course, the final exact position would have to be found by trial and error.

Our friend the owner-pilot, prior to discarding his petrol engine, would find that his 'plane, if suspended likewise, would take up its normal flying position in like manner.

Now with an average type of duration 'plane we just slide the wing along the fuselage until the model balances correctly, and away it flies. But in our case the wing position is definitely fixed for us by the prototype, so we have to hunt around for other means of accomplishing this.

The first thing that comes to our mind is, naturally, to put weight into the nose, but weight unfortunately is also one of our chief worries, as the more weight we pile on the more power we require to lift it, and more power means more rubber! This means more weight, and so we go on!

Now as we are definitely tied to the outline shape of our model, we must look for something we can alter without disturbing the shape, and the first thing that strikes us as being completely different from the real thing but hidden inside is the motive power; so perhaps we can arrange this in some way to correct our weight distribution.

To get the greatest number of turns on our motor, and consequently the longest power run, we must have a long motor, and the generally-accepted principle is to thread our motor from the nose to the tail. With this arrangement we shall probably have about two-thirds more rubber behind the centre of lift than in front. This

THE GLOSTER "GLADIATOR"

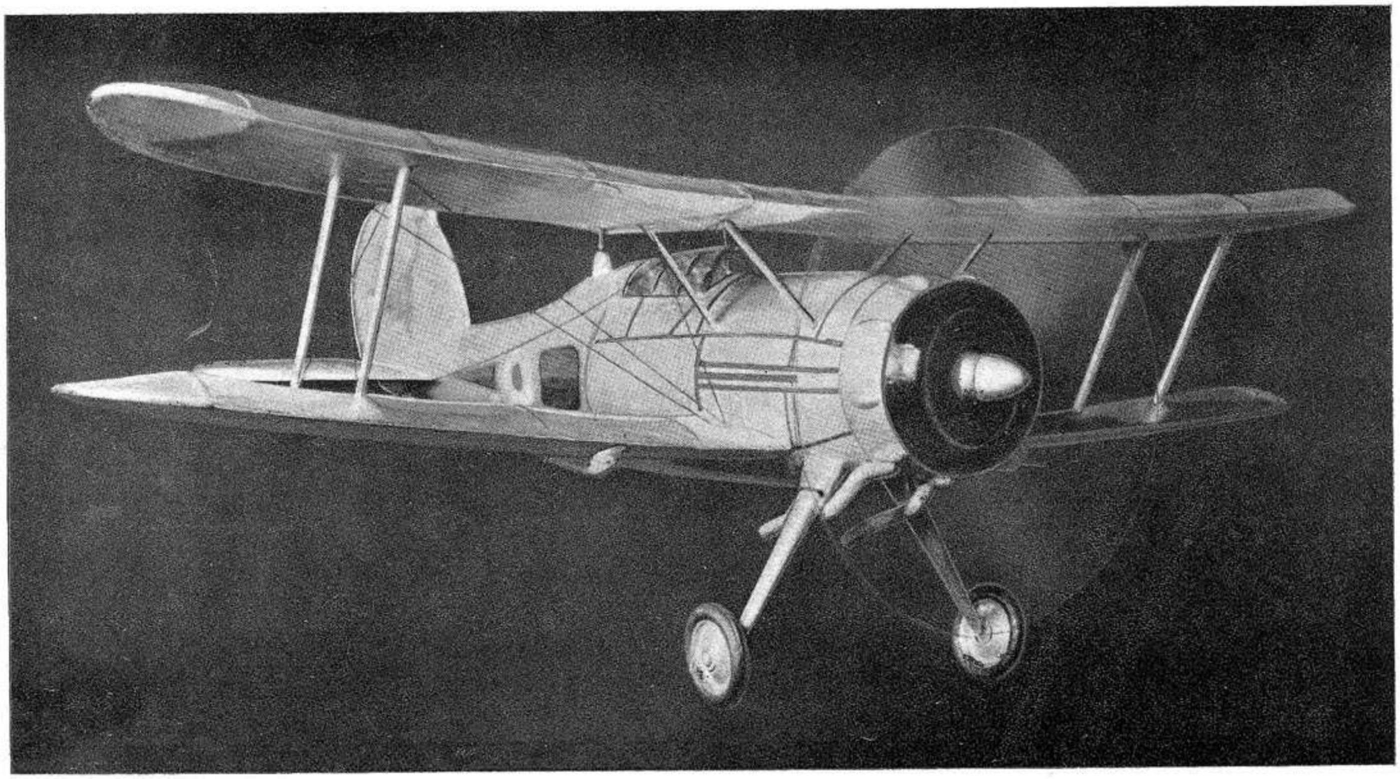

Here is a fine photo of a very popular biplane. Span is 18½ in. Full-size plans are at the end of this book.

means, of course, that not only have we relieved the nose of a lot of weight in the form of an engine, but that we have actually piled on a lot more weight to the rear of the centre of lift, exactly where we do not want it.

As the whole design is one big compromise, let us bring our rear hook well forward, so that the centre of lift of the wing lies half-way along the rubber motor. In this arrangement, as we have just seen, the front and rear portion of the motor cancel out, and provided we can make our tail unit light enough and a certain amount of lead or plasticine, or " what have you," is added to the nose, we can achieve our correct position for the centre of gravity.

Let us suppose when the motor was the full length of the fuselage we could put on six hundred full turns, but with the shortened motor we can only put on about four hundred; the duration is less. But as we have to add less weight in the nose than we should have to do in the first case we shall not want such a powerful motor, and so we can actually use *fewer* strands of rubber. This will slow up the speed of our airscrew and will lengthen our motor run. It may perhaps equal or even *exceed* the duration of the first example of six hundred turns.

But there is still, in the majority of cases, dead weight to be added to the nose, and this is where a gearbox comes right into its own on a scale model. The gears and their shafts have of necessity a certain amount of weight, and we can place this right forward, just where we want it!

CHAPTER V

GEARBOXES

FUNCTIONS OF GEARS. EFFECTS ON MOTOR.

THERE is a maxim in aircraft design that one should design a component to serve as many uses as possible in order to save further parts and cut down the weight.

Now fortunately a gearbox fulfils five very important functions, viz.:

(*a*) Weight in the right place.
(*b*) Longer motor run.
(*c*) More even torque.
(*d*) Less torsion in the fuselage.
(*e*) Use of smaller propeller.

The question of weight we have dwelt on at some length, but it seems it cannot be emphasised enough. People one would expect to know all about it seem to slip up on this point, or perhaps they are so concerned with the looks of the model that they can't afford to compromise! But whatever it may be, however well the model has been built and finished, if the centre of gravity is in the wrong place the model is no longer in the flying scale category and should be classed as an exhibition model only.

Now the longer motor run achieved by using a gearbox is a very great boon, especially as we propose shortening our motor to effect trim; and it comes about this way.

Suppose we require eight strands of rubber $\frac{1}{4}$ inch wide and 20 inches long to fly our 'plane, and these are made up into one motor, the total number of safe turns we can put on is in the region of 580, depending on the freshness of the rubber, whether it is well lubricated and well stretched, etc.

When this motor is fully wound and tightly knotted it is obvious that the stretch of the rubber motor is taken up in wrapping itself around itself in the form of knots, and that if we divide our eight strands into two lots of four equal strands geared together we shall be able to get a greater number of knots on each skein, and hence a longer motor run but the same total power output. Of course, there is added friction between the gears and shafts and bearings to account for, but taking the twin skeins only into account, where 580 turns were put on in the single skein we can now actually wind up to 817 turns on the twin skeins.

Moreover, should we use *three* gears and a third skein, then we can increase our total turns to 1,000. Still further, if we use a gearbox of four skeins and four gears then we can increase our number of safe turns to 1,160! It must be borne in mind that by using two skeins we do not double the number of turns, but it increases in accordance with the square law. That is to say, two skeins will take 1·41 times the number of turns of a single skein, three skeins will take 1·73 times and four skeins will take twice, and so on. The use of gears evens out the torque, and consequently the thrust or pulling power of the airscrew. In order to explain this, let us examine the single skein motor, and wind to full turns; as we are winding it becomes harder and harder to do so. Now in the reverse process, as the rubber is unwinding, the greatest power is delivered to the airscrew during the first few seconds. As the motor runs out so the power dies away, until the last few turns are of no value at all. This all means that we get an initial burst of power that takes the model rushing upwards, and then a gradual slackening off until the power is exhausted.

From the duration man's point of view this is excellent, as he is enabled to get his " ceiling " quickly, accompanied by a long, floating glide; but for the scale modellist this is all wrong.

We have already decided that the model should not only be to scale, but the style of flight should be correct. That is to say, a replica of a small light 'plane should not rush up into the sky any more than a scale version

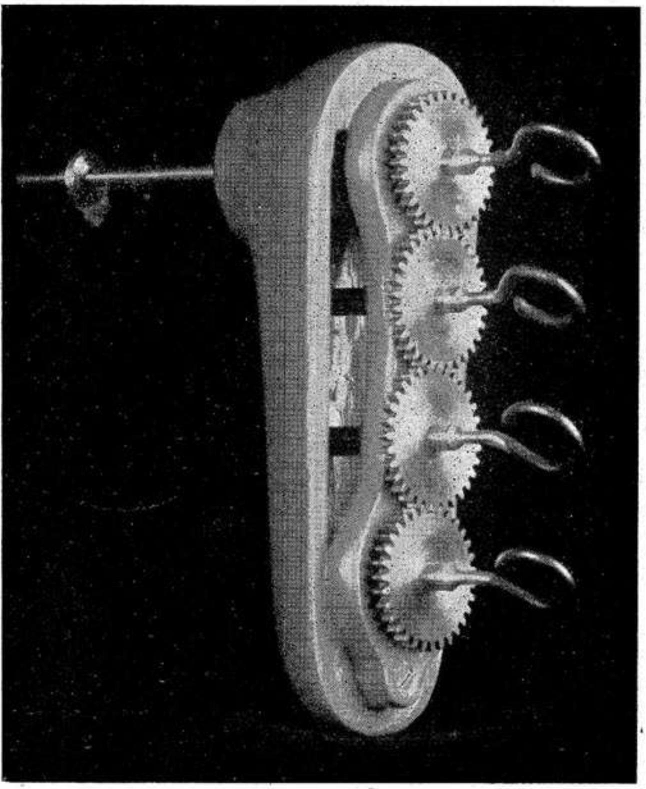

of a high-speed fighter should come floating in on a slow glide.

Fortunately, with the use of multi-skeins not only have we lengthened our motor run, but, as we still have the same amount of weight in the rubber, we still have the same amount of power. This same amount of power has to be expended over a longer period of time, and in so doing the initial burst of power is lessened, and the power more evenly distributed over the whole duration.

By using three- or four-gear motors this effect is still more pronounced, and, in fact, with a four-skein gearbox we can utilise nearly the whole of our turns for flying and almost do away with the useless turns at the finishing end.

Some fellows who have tried gearing will tell you that they know it gives a longer power run, but they don't get the climb. *This slow climb and long power flight is exactly what we want for scale flight.*

The illustrations show various types of gearboxes. Fig. 10 is a four-spindle box shown applied to a Gipsy type cowling. Fig. **11** is a three-spindle box enclosed in a Kestrel or Merlin cowling. Fig. **12** is a simple two-spindle box fitted to a light 'plane with a horizontally opposed engine, and Fig. **13** is the same twin spindle with the propeller geared up to go two or three times as fast as the rubber shown fitted to a Pobjoy motor.

If we refer to the chapter on aerodynamics where we discussed downthrust and sidethrust to correct for torque, we see that by reducing the initial burst of power we have helped ourselves tremendously in achieving a stable flight.

Now let us consider function number four of our gearbox. Less torsion in the fuselage. Most of us have heard of reaction. Action and reaction are equal and opposite. That is to say, the turning action of the rubber in turning the airscrew has an equal and opposite reaction in the form of the motor trying to twist the rear of the fuselage about itself in the opposite direction to the rotation of the airscrew. This all means that the part of the airframe to which we attach the rear hook has to be strengthened to withstand this load, and in fact the whole fuselage has to be strengthened, and consequently more weight must be added to the rear.

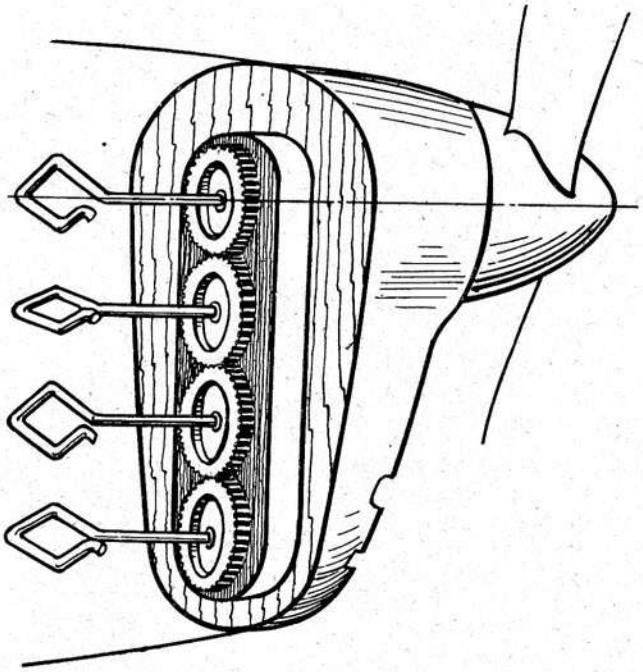

Fig. 10.

But if, on the other hand, we use two skeins of rubber geared together, then one turns in the opposite direction to the other, and the *torsion at the rear hook is cancelled out*, greatly to our advantage, since the fuselage is not twisted at all.

Naturally, a combination of an even number of skeins will always produce this result, while odd numbers will only make a difference in torsion of the one odd skein.

We now come to the last, but not the least, important factor of using a gearbox, namely, the use of a smaller propeller.

Going back to the single skein arrangement as exemplified by the duration model, we have to use a large airscrew and plenty of blade area to absorb some of the initial burst of power, otherwise the motor would run out too quickly. But where we have a more or less even output of power, and spread over a longer period of time, we can use a smaller diameter airscrew, which means less blade area. A smaller diameter means a faster revving airscrew to deliver sufficient power to fly, but this means getting nearer to scale. (As a matter of fact, all S.M.A.E. records for scale models must be accomplished with a propeller of the correct scale diameter.)

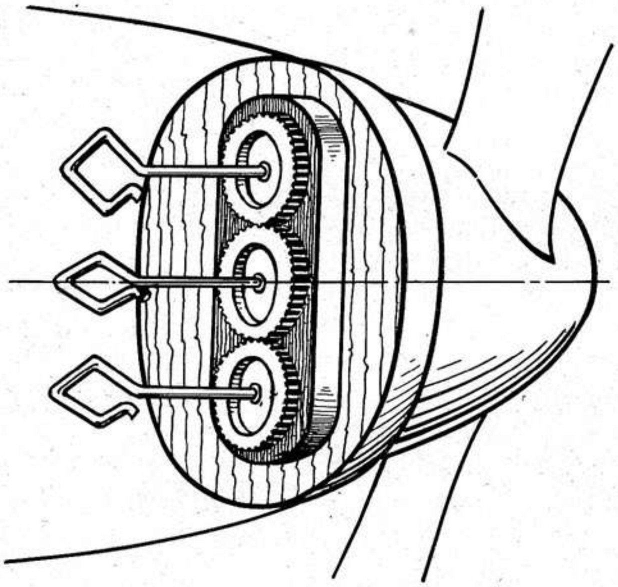

Fig. 11.

While on this subject it would be as well to mention the practice of gearing up the airscrew, that is to say, arranging for the airscrew to revolve faster than the rubber motor. By this method a still smaller propeller can be used, but there is a limit to the size of propellers that can be used efficiently. Not only that, but if the airscrew is not designed correctly it will tend to go back to its old tricks again and give us a high burst of power and a long trail-away of useless turns.

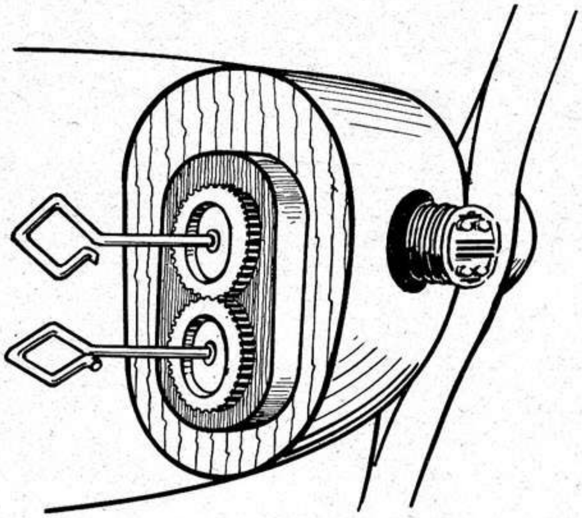

Fig. 12.

So we can sum up the five uses of the gearbox and say that by its application we can achieve a long, steady output of power, maintaining a stable flight at a constant height for the longest part of the motor run, and giving us the exact effect of the prototype in flight.

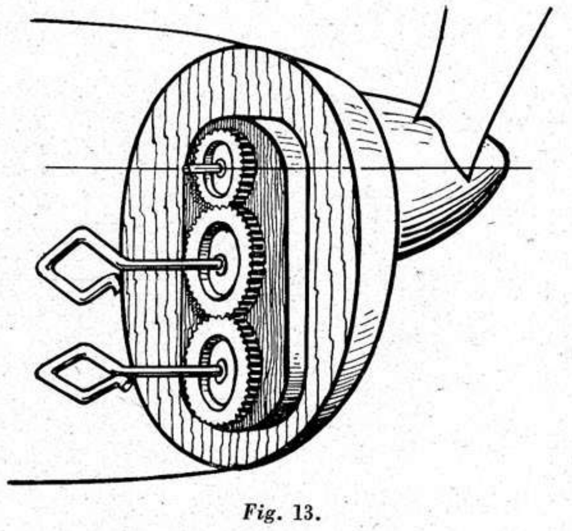

Fig. 13.

CHAPTER VI

DIRECTIONAL CONTROL

RUDDER CONTROLS. COUNTERACTING TORQUE.

So far we have only considered longitudinal trim and the correct placing of weights to achieve it.

However, the question of movable controls will naturally occur. For those who wish to fit them, the simplest and most effective way is to have the hinged portions, such as the rudder, ailerons, elevators, etc., made separately, and then fastened to the main portion of the aerofoil by means of aluminium tabs in such a way that each control surface will remain fairly rigid in whatever position it may be placed.

However, from a purely performance point of view it is far better to leave all control surfaces definitely fixed and built integral with the model in a neutral position.

However well one may trim a job and mark the exact position of variable controls, the probability is that on a roughish landing the controls will all be put out of order!

Also, as these controls are very sensitive, especially on the elevator and rudder, it is a moot point whether they can be set accurately after each flight, and the chances are that in the heat of the moment and rush to make another flight these controls may be forgotten, with disastrous results.

Some form of semi-permanent adjustment is obviously necessary, and it is suggested that the " empennage," that is the stabiliser, elevators, fin and rudder, be made as a single unit, and detachable. This unit can be held in place by means of small wire hooks and rubber bands, and will take a knock safely. Not only that, but it is far easier for transport purposes, and transport amongst the aero-modelling fraternity is generally a very serious problem.

But to return to the adjustment of the tail unit. It will readily be seen that it is quite a simple matter to pack the elevator up slightly, either positive or negative, by cementing small strips of balsa underneath, and to very slightly offset the unit sideways to obtain a circling inclination to one side.

Now this cirling tendency must be only very slight, otherwise we shall have the model dipping a wing and spiralling to earth.

It is very important that these various semi-permanent adjustments be made for the glide only, so that when the motor runs out our model shall still be in complete stability and shall safely come to earth.

Of course, the turning tendency to the left is always present when the motor is running, owing to the torque or reaction of the airscrew, but this will be counteracted by offsetting the nose-block slightly to the right.

It is important that all superimposed adjustments while under power should be made to the nose-block, *and the nose-block only*. Not only should the direction of flight under power be adjusted this way, but also climbing abilities as well, by either giving a slight amount of upthrust if the model tends to be underpowered, or downthrust if the model should climb too steeply.

It will be realised that with the use of a gearbox to eliminate the initial burst of power there should not be excessive torque to counteract, but where a single-skein motor is used without a gearbox, then a certain amount of side- and downthrust is almost essential.

CHAPTER VII

WING FIXING

RIGIDITY. DETACHABILITY.

THERE is another point directly affecting stability in flight, and that is the " rigidity " of all parts, and when designing wing fixings, tail fixings, undercarriage fixings and so on, this must be very carefully borne in mind.

We go to great lengths to get our trim exactly right after having studied—and, we hope, applied—the lessons learnt in the chapter on aerodynamics; and then if, during flight, the tail unit is not a fixture in the sense that it is rigid, and slight lifting of the elevator or turning of the rudder by a sudden gust occurs, all our good work is upset. Even should the model right itself in the air we do not know when the next disturbance will upset it again, and the whole flight is watched with our hearts in our mouths, wondering when the model will crash. Consistent flights mean consistent setting of the controls, and therefore no flapping part can be tolerated.

In considering the type of wing fixing it is as well to consider the problem of transport as well, as it may be advantageous to design our model to separate into more than the usual three parts — fuselage, wings and tail. Naturally, the size of the model also has a bearing on the subject, and here let us impress upon you the fact that most people build their models too small. Should storage space be a deciding factor, then we must perforce keep our size down, but even then, cleverly designed models that will take to pieces at home but will not fall to pieces in the air are a great asset; and it is suggested that builders should try, wherever possible, to keep to the S.M.A.E. formula of one inch to the foot for all normal models. Perhaps for the smaller prototypes of, say, 30 ft. span, we can build to a scale of one-and-a-half inches to the foot, which will give us a model with a span of 45 inches—a nice handy size, and something that will not want such a dead calm day to fly in!

Generally speaking, a high-wing design, that is, with the wings fixed on or near the top of the fuselage, is fairly straightforward, as the roots of the wings can be either hooked on the top of the cabin sides or else dowel pins pushed into paper tubes can be used, as shown in Fig. 14. These wings are then generally held by struts reaching from the bottom of the cabin sides of the fuselage, supporting each wing panel perhaps half-way out from the root. These struts, of course, brace the whole wing and make it rigid. Should these struts be attached to the base of the fuselage in the same way as the wings, by dowels and paper tubes or by the use of press studs, the whole wing will knock off on a bad landing and perhaps save a bad crack-up.

Press studs are quite suitable for small parts, and where no great strain is to be taken. Of course, heavier types are available, but generally they require such a pressure to snap them together that quite a lot of damage can easily be done to the surrounding parts if these are not purposely strengthened. It is often difficult to fix these fasteners firmly to the structure without their pulling out. As a matter of fact you will be surprised how strong they will be if you just " sew " the fastener into place with an ordinary needle and thread and a spot of cement or glue to make all firm, as shown in Fig. 15.

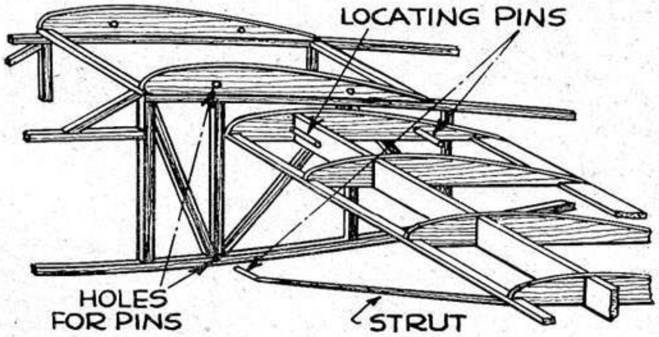

Fig. 14.

Where paper tubes and hardwood dowels are used, these should generally be about ⅛ in.

dia. up to, say, $\frac{1}{4}$ in. for the larger and heavier models.

This $\frac{1}{8}$ in. dia. dowelling can easily be purchased at any wood store, and is usually made of birch.

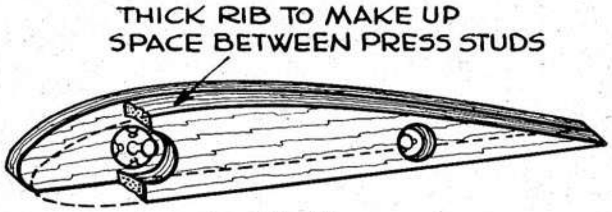

Fig. 15.

In order to keep the wings firmly butted against the airframe, rubber bands are generally used. These form the easiest method of holding the wings into position, but also allow a slight movement should the wings come into contact with a solid object. The rubber bands can be fitted in two ways. Firstly, small steel wire hooks protrude from each wing root and are connected together by a rubber band in tension passing right through the cabin-top in such a way that the rubber band pulls both wing roots tight against the fuselage. This is no doubt the neatest method, but not too easy to fit on the flying-field.

The other method is to use external rubber bands, one on each leading and trailing edge, and each one separately attached to suitable steel hooks on the fuselage. If these are neatly fitted and the colour of the rubber band is chosen to harmonise with the adjacent colour they will not be too prominent; a very easy device is assured, and from experience gained in the flying-field we recommend this as the better method of the two.

These rubber bands are only used to keep the wings in position and to prevent the dowels from coming out of the paper tubes, and they do not take any of the lifting loads.

The wing fixings of a low-wing model, a model whose wings are attached to the bottom of the fuselage, do really present a difficulty, because these wings are usually what are termed " cantilever " wings. A cantilever wing is one that is self-supporting and has no outside struts to support it.

Therefore we have to design a fitting that will be definitely rigid and will not allow wing flutter, but at the same time must be capable of withstanding normal landing shocks.

From a purely scale point of view the wings on a low-wing prototype are generally attached to a centre section which projects quite a distance either side of the fuselage, and from a transport point of view it may be advisable to make this centre section removable. If this be so, then our separate wing panels can be firmly plugged into the centre section and the centre section itself can be flexibly mounted to the fuselage by means of vertically placed rubber

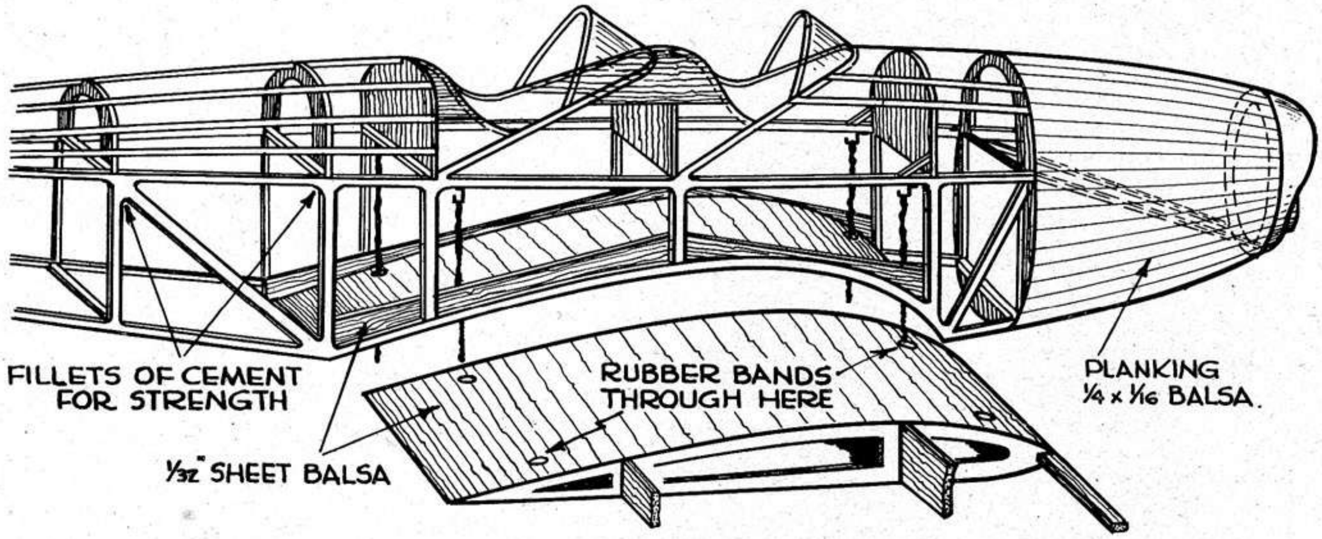

Fig. 15*a*.

bands inside the fuselage, and the centre section located by the arch formed under the fuselage to accommodate it. On any of the smaller powered prototypes this is quite a good method. Fig. 15a is a suggestion for a "Moth Minor" on these lines.

However, when a high-speed and high-powered job is under consideration the centre section is usually very well faired or streamlined into the fuselage, and here it is desirable as a rule to combine both together into one unit, and it is in this case that the wing fixing calls for a lot of thought.

Should the dowels be rather long in order to get rigidity, the dowels may rip out quite a lot of framework on a bad landing. On the other hand, if they are short, in order to enable them to slip out quickly, then the wing will not be rigid and will probably have a variable dihedral and consequently an unstable flight. When building large models of, say, over four feet span, it is advisable to make detachable wing tips of about four or five inches down the span, and plugged in by whichever method is desired. This will help to save a wing in a crash.

Then there is a further method which the writer used successfully on the "Airspeed Envoy." This method consists of two aluminium "U" pieces attached to each side of the centre section on the outer ribs. These "U" pieces fit over the root ribs of the wing panels, and balsa dowels are pushed right through the "U" pieces and through suitable holes in the wing panels. These dowels are made strong enough to hold all together rigidly, but in the event of a crash the dowels break and a fresh dowel is inserted, pushing out the broken pieces. These dowels or shear pins can be likened to a fuse in an electric circuit, or safety valve in a steam engine. No rubber bands are needed at all in this type of wing fixing.

It should be borne in mind that a certain amount of "spring" should be incorporated in each wing, otherwise it will be liable to snap. In order to determine how much spring to allow, a wing panel of, say, 20 inches from root to tip, when fully covered and tightened, should be able to "bow" or spring about one inch; if not, the construction is too heavy or not properly designed.

(There is a definite practical illustration of this in the building of tall factory chimneys. You may have noticed in a strong wind how two tall chimneys close together will slightly sway. One can see the two tops coming closer together, and then going apart again. This is allowed for in the construction, to prevent them snapping off if they were too rigid.)

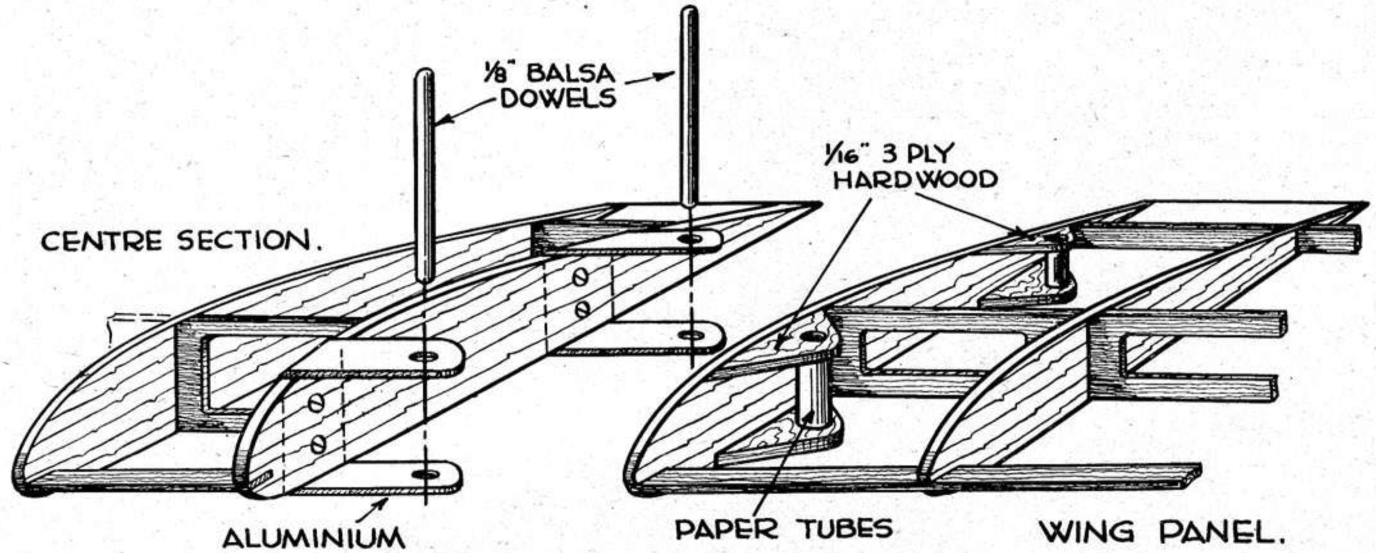

Fig. 16.

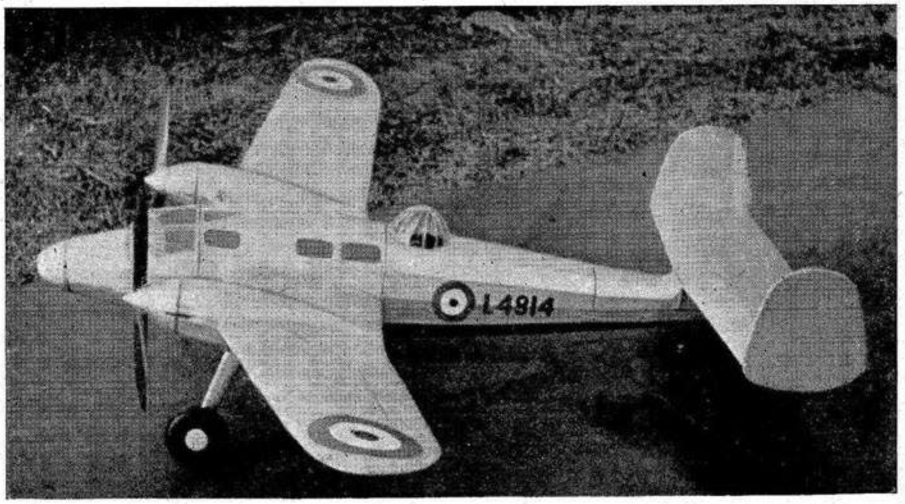

Though not strictly to scale, the model shown in the top and middle photos might easily be thought to be a model of one of Britain's latest twin-engined bombers! Designed and built by Mr. C. Rupert Moore, the model incorporates many novel features, is of most advanced design, and capable of a very fine performance. It is made as a scale model of an original design.

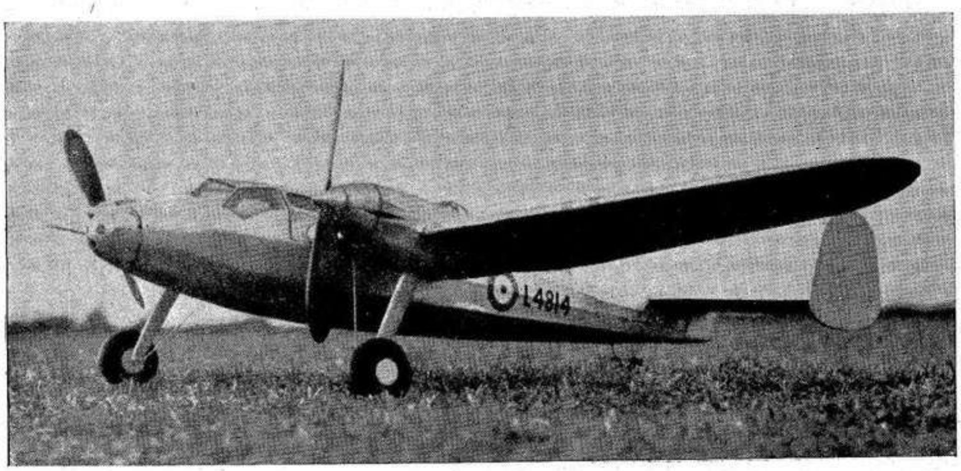

This model is to scale! It is of a Hawker "Hurricane," and is powered with a $\frac{1}{5}$ h.p. petrol engine. The photo was taken at Cranwell Aerodrome, and by careful positioning of the camera the cadets were introduced into the background to make a most realistic photo!

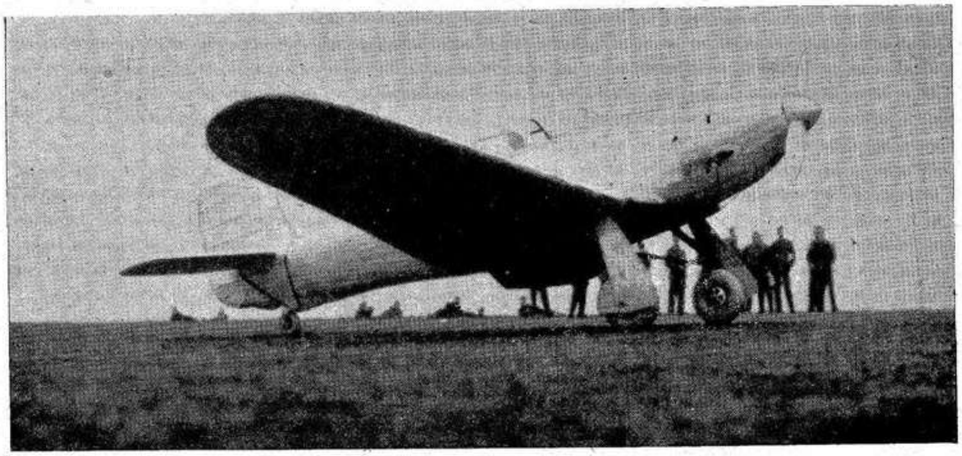

CHAPTER VIII

LANDING GEARS

ACTIONS. RETRACTILE TYPES. TRICYCLES. FLOATS AND BOATS.

THE " undercart," as the flying folk call the landing gear, will probably cause the aeromodeller furiously to think. How to incorporate it in his model and at the same time make it strong enough to withstand landing shocks and look like the real thing!

It is only proposed here to deal with the *functions* of the model undercart, as the construction will be dealt with in a later chapter. But so important are the functions of this particular part that the writer has seen fit to devote a chapter to it alone.

The chief reasons for the undercart being there at all are, of course, to support the airframe whilst stationary, at take-off, and to absorb the shocks on landing. Otherwise it is a nuisance, in so much that on most very efficient 'planes it is made to tuck away out of sight, as it offers a most serious resistance to the air whilst in flight.

Taking the prototypes first, the undercarriage legs are either spring or hydraulically loaded. The latter type depends for its action on a piston in a cylinder pushing a certain amount of liquid through a small aperture. It will at once become apparent that on a small model we cannot use the latter method, but the spring method does offer possibilities. However, we must be very careful if we decide to use a sliding action of any sort, as a roughish landing may bend a leg, with the result that the sliding action is jammed.

Where it is decided to use this type, it is strongly urged that the builder, instead of the usual tube for the leg to slide in, uses a flexible tube, such as part of an expanding curtain rod or a Bowden outer covering.

On the other hand, of course, the whole leg can be a dummy, supported by a steel spring wire, or wires, attached to the fuselage in such a way that the legs as a unit spring slightly backwards and outwards to absorb the shock.

Probably the type that springs outwards is the easier to construct, and has a definite advantage over the type that swings backwards. It is this wise:

The landing wheels should be in front of our old friend the Centre of Gravity, otherwise the 'plane would tip over on its nose when stationary. But you will observe on the full-size aircraft that the point of contact with the ground is just behind, or actually in line with, the leading edge of the wing. Now if we adopt the spring-back method we may, on landing, get our line of contact with the ground pushed beneath the C. of G., or even slightly behind it, with the result that over goes the 'plane on to its nose.

Actually, of course, the positioning of the undercart is very important, but unfortunately for us it is fixed by the design we are copying.

For safety's sake it is advantageous if possible to have the undercarriage fairly well forward, so that the tail does not tend to come over on landing.

Unfortunately, however, for a take-off we want to get the tail up quickly, and so we must have the undercart fairly well back. There's a nice problem if ever there was. However, should the builder be prepared to sacrifice a certain amount of scale, it is suggested he can do a lot worse than by moving his wheels forward a little. This can easily be achieved by keeping the position correct where the undercart is attached to the fuselage or centre section; but the actual angle it makes with its fixing is altered slightly, so that the bottom of the legs are farther forward.

It must also be borne in mind that if we should be using a special airscrew to give us duration, and we have to exceed the original scale diameter, we shall have to extend the *length* of our undercarriage to prevent the tips of the blades hitting the ground. Here also it is advisable in nearly every case to deviate slightly from scale and add a little amount to the length of the legs, because, even when taking off on the smoothest of ground, the tail is likely to bump up and dig the propeller into the ground, or at least try to, with dire consequences for the propeller!

The undercart must be made sturdy, which introduces a certain amount of weight, but, as it happens, a certain amount of underslung weight adds enormously to the stability of our aircraft, and on the very small models of, say, 18 in. span and downwards, hardwood wheels to give weight will produce a very steady flight on a quiet day.

Retracting undercarts are quite possible and practical to the mechanically-minded builder, and are great fun to build. However, it must be borne in mind that wheels that retract inwards, like the Heston " Phœnix " and Hawker " Hurricane," or outwards, like the Blackburn " Skua " and " Spitfire," do not affect the C. of G., but all undercarriages that retract *backwards* into the engine nacelles shift the centre of gravity in so doing, and therefore must have counter weights to keep the balance correct.

Retracting undercarts can either be made to retract manually, that is, a small knob or lever can be made to operate them, or else they can be either locked in the up or down position.

There is, of course, the automatic type, which can be worked either by the tension of the rubber motor slackening off as the turns die down (although this method is not advised) or they can be worked by a mechanical contrivance, as shown in Fig. **17**, or a timing gear, as used for petrol model 'planes for switching off their ignition after a given length of run, can be used.

Some of the most successful models that the writer has built have proved that the safest way of bringing a model down is to keep the legs retracted.

With a braced or solid underpart to the engine cowling, and a propeller made to easily knock out, the model will land on its " tummy " very satisfactorily, and end up by just sliding along the ground—and it will always finish the right way up. One model, in fact, was designed so that its legs were detachable, and were taken off for flying! Of course, it necessitated a hand launch, but in flight it gave the exact appearance of a job in flight with the wheels fully retracted, and on all its many landings without an undercart it never came to grief.

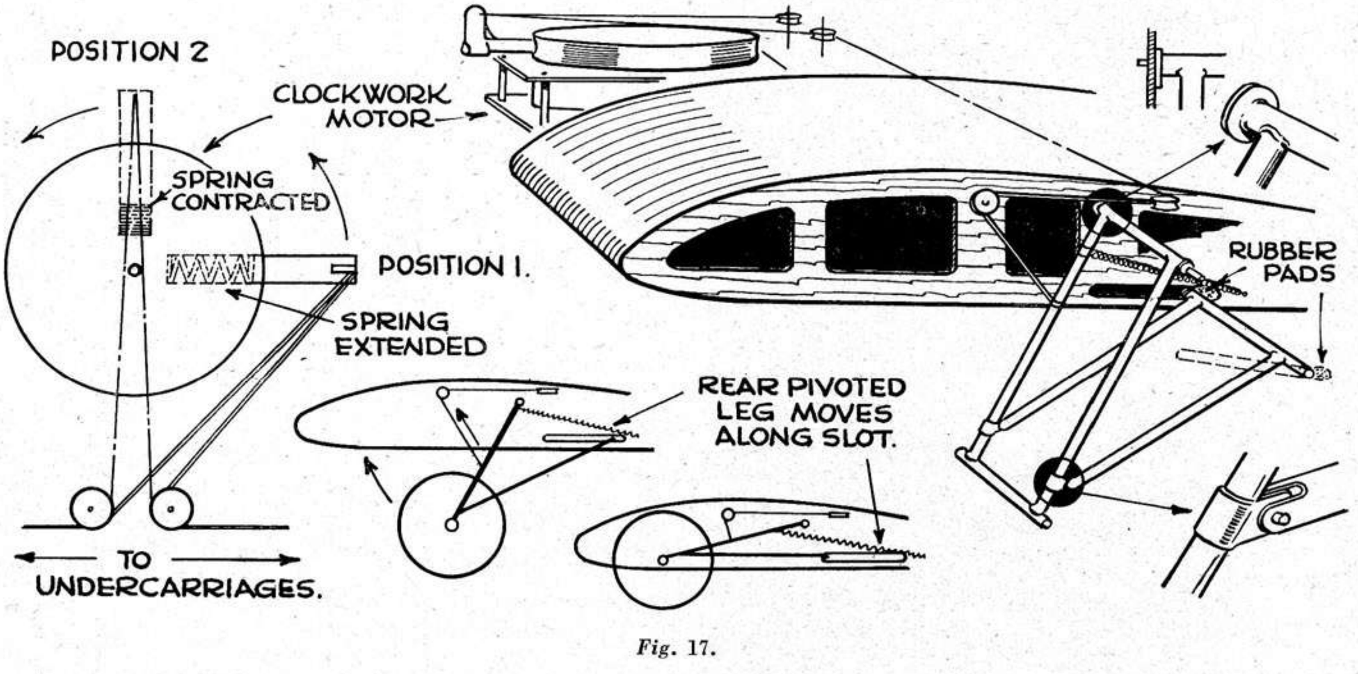

Fig. 17.

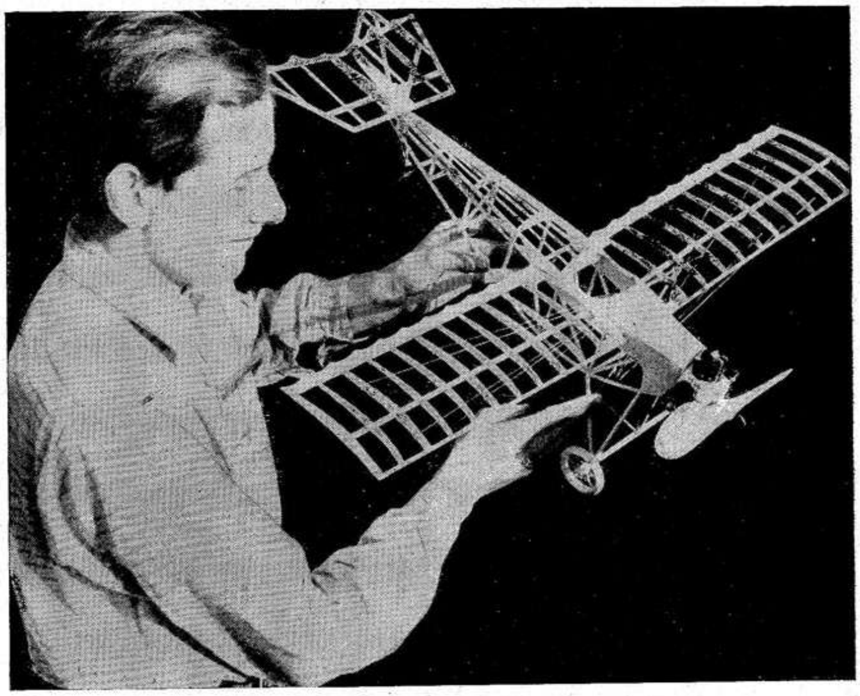

The construction of models of " old-time " 'planes is very popular. This photo shows Mr. G. W. Day with his model of a 1911 Caudron.

This, of course, leads up to the modern method of tricycle undercarts.

A tricycle undercart is the ideal landing gear for a model, because on landing the 'plane can be flown at its gliding angle on to the ground, the nose wheel taking the shock and the two rear wheels just taking the weight of the 'plane. Actually, this is the way a model comes down, as it has no pilot to flatten it out on landing.

The nose-wheel, too, helps to protect the airscrew from hitting the ground.

The chief difficulty is to get the nose-wheel to stand up to landing shocks, but as we probably want some extra weight in the nose here is an opportunity to use it to advantage. A parallel link motion can be used to give an up and down movement to the forks of the front wheel, or else they can be made of spring wire very firmly embedded to a strengthened underpart of the cowling. The pair of rear wheels, situated somewhere near the trailing edge, can be very lightly built, as they have very little load to carry.

Models have been fitted with " skis " for taking-off from snow, and these can easily be fitted, as the springs from the undercart are still available, but where floats to take-off from water are required it is another proposition, as scale floats would be generally fitted with a pair of legs each and braced with thread, the whole being a fixture. The snag here is that they are apt to be wiped off on a landing, and are really not worth while from a flying point of view. However, amphibians and seaplanes with boat-shaped hulls are quite popular, the chief difficulty being to " unstick " these from the water. They require a lot of power to get them on to the " step " before rising, and it is just as well to fit an air vent between the top of the step and the outside of the hull, to prevent any suction occurring, which would tend to hold the model down instead of letting it take off easily.

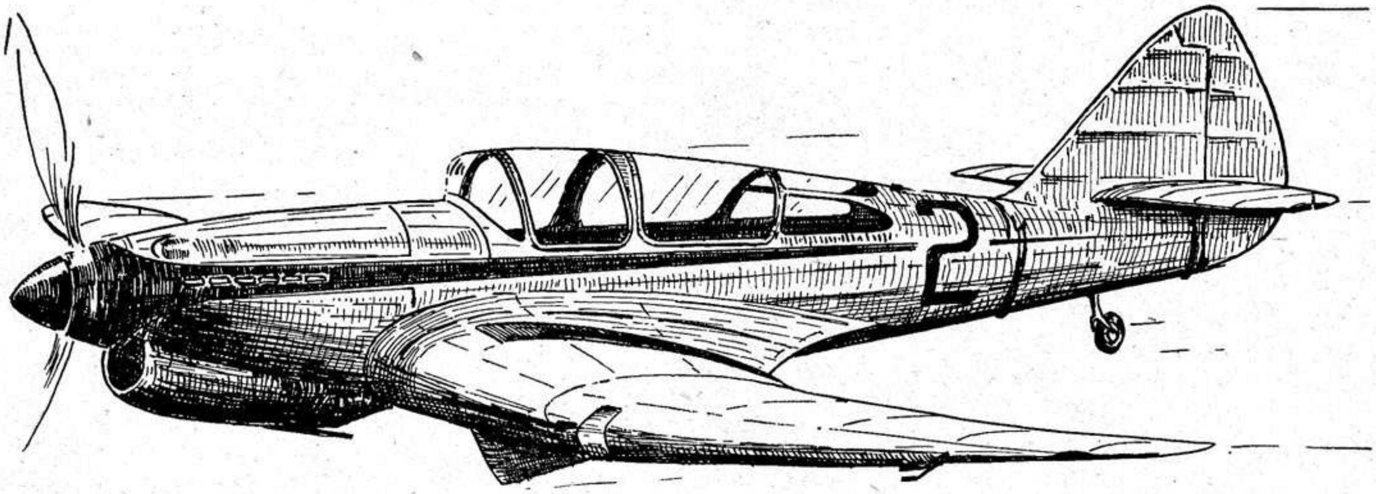

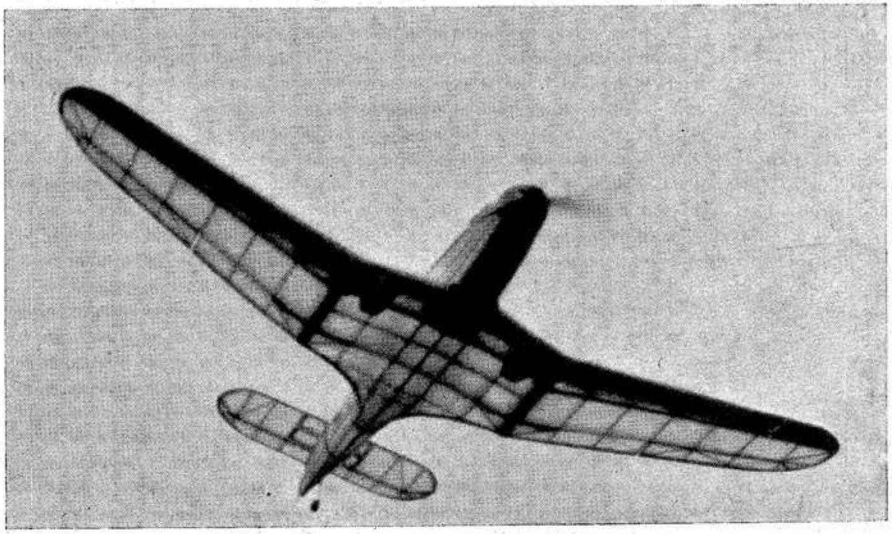

Here is Mr. H. J. Towner with his model of the Miles "Kestrel Trainer." In centre the 'plane is shown in flight, and top is a sketch by the builder of his model.

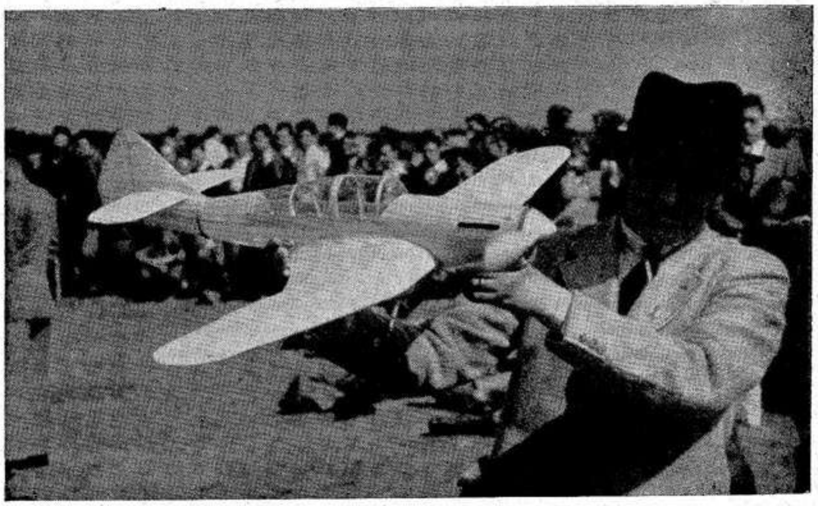

CHAPTER IX

RUBBER MOTORS

QUANTITY. ARRANGEMENT. TURNS.

We have considered this subject to a certain extent under the chapter dealing with gearboxes, so it is only proposed to give a general description of the sizes and amount of rubber most suitable to our scale model.

The amount of power we can store in a motor is directly proportional to its weight, that is to say, we can expect to get twice as much power from two ounces of rubber as we should from only one ounce. Hence it would appear that the more rubber we can store in a model the more power we shall be able to have.

But remembering our redistribution of weight and wing loading, it will readily be seen that there must be a limit to the weight of rubber we can carry, as we cannot move our wing about to obtain trim. In determining the amount required it is as well to start on the low side, always remembering our trim, and add a loop of rubber at a time until we have attained a steady level flight.

Rubber is made in different sizes and thicknesses, but probably the size most useful is $\frac{1}{4}$ in. wide by **1/30** in. thick, and it is suggested as a guide with a **10** in. propeller on a **1** in. to **1** ft. scale, and a weight of about **6** oz., that, without a gearbox, six loops of the above rubber would make a good beginning, and with a gearbox of two gears, that three loops could be employed on each. It may be found that four loops on each will be better, but this must all be tried out on the flying field. When trying out, do at least find the softest stuff for the model to come down on, because we must remember that as we vary our motor so we must slightly alter our trim accordingly.

The length of our motor, too, is important, and, naturally, the longer we make it the more turns we can put on, and so a practice has arisen of using a motor actually longer than the distance between the rear hook and the hook on the propeller shaft. When a few turns have been put on it is quite taut, but the trouble starts when the motor is run out in the air, and, being loose inside the fuselage, it may flop about, and even bunch into knots, perhaps at the tail end, thus upsetting our weight and causing the model to stall and come down in a succession of dives. To overcome this, various methods of tension devices are used, such as explained in the chapter on construction dealing with nose-blocks.

Where, however, a gearbox is used, an extra loop of rubber can be put on to one particular skein and that skein given a few turns in the opposite direction before attaching to the motor hook.

This opposite winding is called " prewinding," and when the motor comes to rest it will attain a balance of so many prewound turns on one skein and so many unwound turns on the other skein, with a consequent even tautness on both and the slack of the motor taken up.

It must always be borne in mind, however, that the fewer strands we use the more turns we can put on, but, naturally, with fewer turns the power output will be less.

By a suitable arrangement of strands with a gearbox we can get a variable power output with the same weight of rubber and the same number of total strands and no deviation from trim.

As an example, the writer's Heston " Phœnix," of **1** in. to **1** ft., with a wing area of **196** square inches, a total wing loading of **8¼** oz., and a gearbox with four gears, the following combinations were used: $\frac{1}{4}$ in. × **1/20** in. rubber **27** in. long, driving a **10** in. dia. airscrew with **13** in. pitch, was arranged in the form of four gears with three loops of rubber on each, i.e. **12** loops in all, and in still air this gave a duration of **25** sec. power and **5** sec. idling at the end, on **600** turns.

This was suitable for a quiet day, but on a roughish day, when more power was required, the motor was rearranged, using four loops on only three of the gears, thus still using the original 12 loops but differently arranged.

This combination on 600 turns gave a power output of 20 sec. and 5 sec. idling.

It will be noticed that although the same power is available in both cases, yet in the latter case the power runs out sooner, and so is greater during the effective time of motor run.

Six hundred turns were not the maximum turns available, but gives a good indication of what to expect from a motor.

You will notice the expression " idling," that is to say, when the motor is nearly out, although the airscrew continues to revolve, there is not sufficient power for sustained flight, and therefore these turns are practically useless.

The safe number of turns we can put on a motor is a variable factor, depending upon the freshness of the rubber, the way it is treated and lubrication used, but assuming everything to be in tip-top order we can take as a safe average the following for 1/30 in. thick rubber.

No. of strands.	4	6	8	10	12	14	16	18	20
$\frac{3}{16}$	42	36	30	27	25	23	21	20	19
$\frac{1}{4}$	38	32	28	25	23	21	17	16	15

Taking this table, a motor of four strands $\frac{3}{16}$ in. wide could be wound 42 turns per inch of unstretched motor. Therefore if the motor was 20 inches long already made up in its six strands we should expect to be able to wind on 42 turns multiplied by 20 inches long, equals 840 turns.

Also, with a gearbox, we can take one individual skein or motor, and the number of turns we can put on this is the total for the whole gearbox.

Unfortunately this table does not cover all thicknesses and sizes of rubber. Then again, different makes of rubber sometimes vary slightly in size, so if in doubt, and we have the energy, there is a formula which can be used for working out the number of turns for any size of rubber.

It looks a bit awful at first, but we can sort it out fairly easily. The formula, then, for the number of turns that will just break the rubber is $\frac{5 \times L^{1\cdot5}}{\sqrt{W}}$ We do not want to break the rubber though, and if we want the rubber to last a long time without breakages it is not safe to give more than 80 per cent of the breaking turns. At the same time, the last few of the possible turns increase the torque enormously, and if we do without them we shall have a much smoother power run. The formula, then, for best results all round is $\frac{4 \times L^{1\cdot5}}{\sqrt{W}}$

Now let us see how to apply this to the rubber. First we must measure its length. The length we want is that of the folded skein. We fold the rubber into the number of strands required for the motor, lay it out on the table and find its length. Then we want its weight, and we want to find the square-root of the weight in ounces. Now that is not very difficult, is it? The next part, $L^{1\cdot5}$, is practically as easy, since it is the square-root of L cubed. In other words, we find the square-root of L and multiply it by itself three times. L must be in inches.

The lubrication of rubber is very important, and the entire motor should be well covered, and any excess wiped off, great care being taken to see that no foreign particle is on the rubber, otherwise on winding this particle may cut into the rubber and break it.

The rubber should be kept in a cool, dark, air-tight container between use, and direct sunlight should be avoided as much as possible.

When tying the ends of the rubber together to complete a skein, it is not necessary to tie them into a knot, but get someone to overlap both ends and stretch them tight while you bind them together with a fine thread—say, six or eight turns will do—this will stand up to all the power you are likely to put on it.

One more point. When winding, stretch the motor as far as you can without putting any undue strain on the fuselage, and wind in this condition. A much more evenly wound motor is the result, with a corresponding more even running of the motor and a better flight.

CHAPTER X

DESIGN OF AIRSCREWS

HOW THEY WORK. PITCH AND DIAMETER. SETTING OUT BLANKS.

IN writing this book the main underlying purpose is to present the subject of scale model aircraft in as simple a way as possible consistent with scientific investigation, and therefore we have carefully avoided any mathematical formula.

However, when we discuss the design of airscrews we are dealing with a subject which could involve us in a maze of wonderful figures. And even suppose we designed our propeller accordingly, the chances are that the finished article might not be the very best choice for our job.

So what we propose to do is to give the reader a simple method of laying out his own propeller in accordance with the best accepted principles, and then, by a system of trial and error, eventually evolving the best propeller for the particular model under consideration.

If the builder keeps to the same scale in building his models he will, after a time, have an assortment of various propellers of approximately the same size, and by interchanging them it may be possible to find the best one for any particular aircraft.

It must always be borne in mind that however well the model has been designed and built, and however much rubber has been stowed in the fuselage (and the rubber is the motive force), if we cannot convert this energy efficiently our flights must perchance be of a poor order.

It is the propeller alone that converts our power within the model to powered flight. Therefore, however nice a particular propeller appears on a model, if it does not deliver the goods it is no use to us!

Although we generally term a propeller a propeller, it is a very loose phrase, because a propeller in reality should be placed behind the main-plane and act as a " pusher " or " propeller." The propeller in front, as is the more general position, is really termed a " tractor," or one that pulls.

However, to suit our purpose we often use the word " airscrew," which embraces both types, although even this word is a relic of earlier days, when people imagined that its blades " screwed " their way through the air similarly to a screw worming its way through a nut.

Actually, however, we must imagine each blade to be an airfoil or wing, and in revolving through the air it is developing lift or thrust, giving forward motion and drag in the form of torque. And just as in our wing we have incidence or angle of attack, so we must have this angle of attack in our airscrew. This angle, too, must be kept within reasonable limits, otherwise our propeller will stall.

The " thrust " or pulling power of the airscrew is used to overcome the drag (or

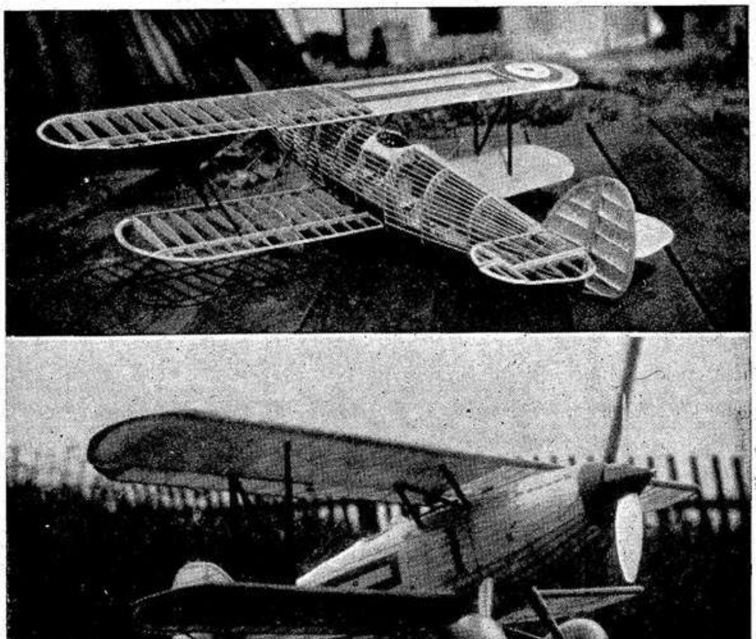

A beautiful model built by Mr. E. Dyer.

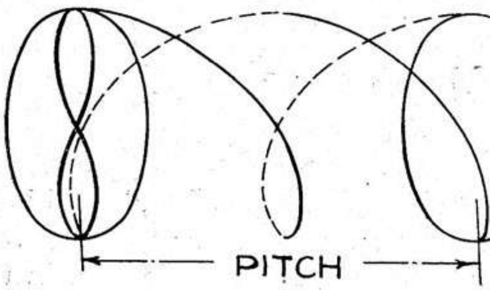

Fig. 18.

wind resistance) of the aeroplane, and the thrust depends on the diameter and speed of rotation. It also varies with the forward speed of the machine. With the model flying at a certain speed, then, there will be a certain speed at which the airscrew must revolve, and from this speed of rotation and the forward speed and drag of the machine we should be able to determine the best airscrew. The design of an airscrew on scientific lines, however, is rather out of the question, since there are so many forces on the model we are unable to measure. By far the best plan is to try two or three different pitches, since the diameter is fixed by the scale, and a strand or two, more or less, of rubber on the motor will vary the speed of rotation.

The " pitch " of an airscrew is the distance it travels forward (theoretically) in one complete revolution. See Fig. 18. However, there is a certain amount of slip, usually at least 25 per cent, so we seldom have an airscrew that is more than 75 per cent efficient. The pitch business can be likened to a gearbox on a car. A high pitch is like the high or top gear; it travels a long way in one revolution, but requires a lot of power, whereas a low pitch, like low gear, can do with less power per revolution, as it does not travel so far, but it will turn over faster. If the pitch is too large the airscrew will stall and not generate sufficient thrust to pull the machine through the air. On the other hand, the pitch must be high enough to suit the flying speed of the aeroplane. There is quite a wide margin between too large and too small a pitch, which is another reason for trying different pitches to find the best.

We now want some guide as to what pitch to try, and since we have a number of different diameters, this is best done by a pitch to diameter ratio. One writer is of the opinion that this should be from 1 to 1·3. That is, if we have a pitch/diameter ratio of 1·3 we should have a pitch of 13 in. for a diameter of 10 in., or a pitch of 7·8 in. for a diameter of 6 in. The other writer considers that pitch/diameter ratio should be lower, and might usefully vary with the ratio of diameter to wing-span. He thinks that if the diameter/span ratio is, say, one-seventh, as with the B.A. Swallow, the pitch/diameter ratio should be one-half to two-thirds, and where the diameter/span ratio is, say, one-quarter, the pitch/diameter ratio could be about 1/1. Here, then, is another reason for experiment.

Blade area, too, plays a part, and is varied by the width, since the diameter will be fixed. This again has some connection with the pitch, since a wider blade will give more thrust and will stand a larger pitch.

This width should not be too great or it will look ugly. A larger diameter would be much better, though not to scale. Looks and efficiency would be a big improvement on scale diameter with very wide blade.

If we are building an advanced model with two airscrews, we could work out the pitch as above, and then multiply it by 1·4, i.e. the square-root of the number of airscrews.

If we consider Fig. 19, this will give us a good average arrangement suited to most purposes. Although it is drawn full-size for an airscrew 12in. diameter and 12 in. pitch, the figures we require can be substituted. Should we wish to make an airscrew that is to scale in width (we can fly a model successfully with one), the lengths a, b, c, d in Fig. 2 should be taken from the full-size airscrew. These dimensions would be taken across the flat face of the blade, ignoring the effect of the twist.

Most probably, however, our propeller will be about 10 in. dia., with a pitch of between 7 in. and 13 in. Assuming we are

Fig. 19.

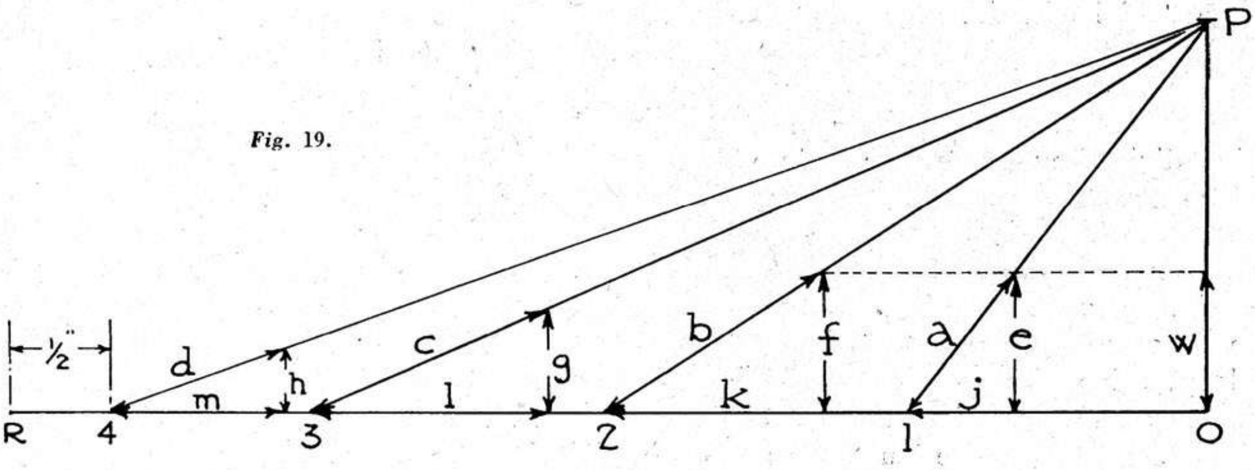

Fig. 19a.

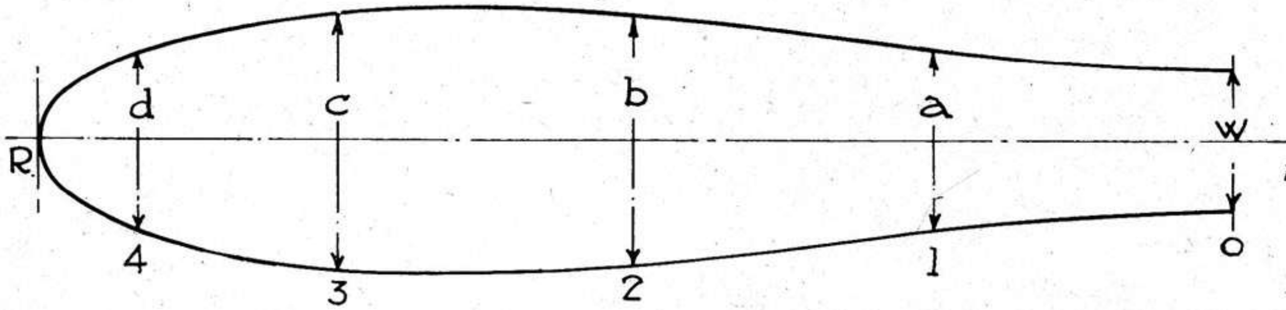

Fig. 19b.

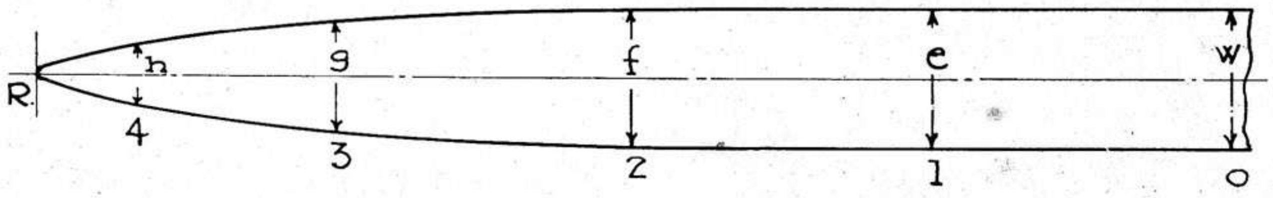

Fig. 19c.

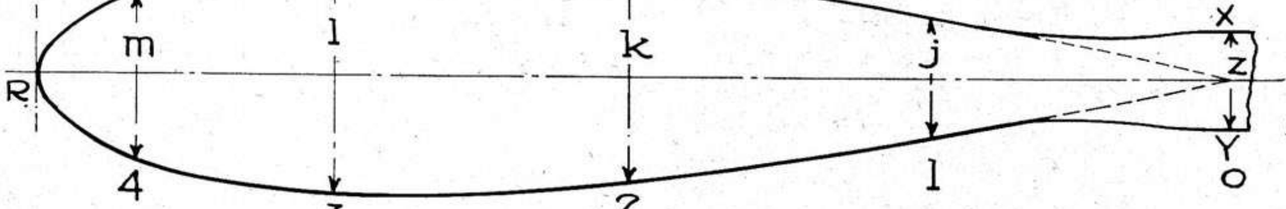

Fig. 19d

Fig. 19e.

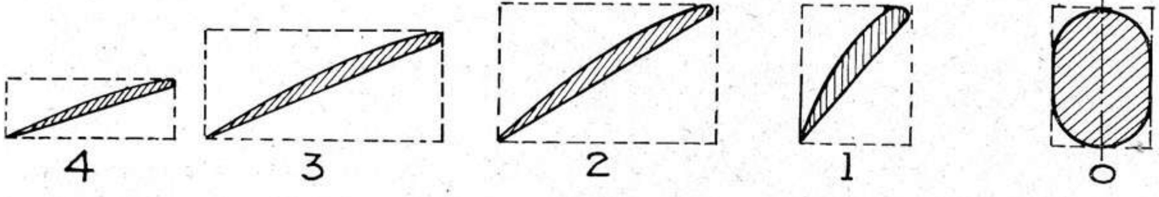

building a model of 1 in. to the foot scale.

Decide on the size required, and, referring to Fig. 19a, draw the radius of the propeller OR, then draw OP, which is equal in length to the pitch divided by 6. Divide OR into four equal spaces, marked 1, 2 and 3, and mark another point 4 at $\frac{1}{2}$ inch from the end R. Join these points to P. Next draw the centre line for Fig. 19b and mark off the lines 1, 2, 3 and 4 to correspond with Fig. 19a.

The lengths b and c are now put in, and should be equal to the diameter of the propeller divided by 9. Mark off the lengths b and c, Fig. 19a, and draw a line shown dotted from the end of b.

This gives the lengths d and w, which should be marked off in Fig. 19b.

Draw a smooth curve round all the points, and from this curve measure the length of d. Put in the length of d in Fig. 19a.

Draw the centre line for Fig. 19c and the lines 1, 2, 3 and 4 as before, and mark off the lengths W, E, F, G and H corresponding to the length of these lines in Fig. 19a. Draw in the curves as indicated, and we have a side view of one blade.

Draw a centre line and lines 1, 2, 3 and 4 in Fig. 19d, and the length of the lines j, k, l and m from Fig. 19a.

Draw in a curve through these points and point Z as indicated.

The centre XY is determined by the size of the boss or spinner, and should be made accordingly.

It is advisable to make the airscrew out of a good close-grained hardwood, such as walnut, as it will probably get quite a lot of knocking about, and the slight extra weight involved will be in the right place.

Where a three-bladed airscrew is considered, the total blade area will be approximately the same as a two-blader, so the width of each blade will be less.

On examining the different sections in Fig. 19e it will be noted that the angle of the blade increases towards the hub. As the airscrew is revolved it will be seen that the tip of the blade has farther to go in one revolution than the root of the blade, although in a forward direction the distance is the same, hence we get the twist effect when looking end on to the airscrew. The most effective part of the propeller is between a quarter and one-third of the radius from the tip, so we are careful in making this part the widest and the truest to pitch. Actually the pitch at the root is not correct, but we make it as near as we can, or even fair it off so that it makes as little disturbance to the air as possible in the form of a boss or spinner.

We can always take a little off the width of the blades if we find that, with the power available, the propeller is too slow, although, as we shall see in the chapter on " motors," another loop of rubber may cure this trouble. On the other hand, a propeller that whizzes round with not much speed to the model probably has not enough blade area, assuming the pitch and workmanship to be up to standard, unless it happens to be very small in diameter compared with the wing span. A little experience here is the best way of learning, but we must not expect to fly before we can run.

CHAPTER XI

GENERAL DESIGN

GRADES OF BALSA. TRIANGULATION. GENERAL NOTES.

As the materials we use are so bound up with the question of general design, it is proposed here to give a short description of their qualities and suitability for specific parts.

As balsa wood is the chief material used in the construction of model aircraft, we will take this first.

Balsa wood comes chiefly from South America, and comes to us in a very dry, light state, but in different grades, and it is in our choosing the right grade that the efficiency or otherwise of the model will largely depend.

We can divide the grades chiefly into two groups—hard and soft. The hard can be distinguished by a much closer grain than the soft, and also, of course, by gently pressing with the finger nail.

Unfortunately, however, the hard balsa is much heavier than the soft; in fact, it probably will weigh about twice as much, as the weight of balsa will range from about 3½ lb. per cubic foot for the very soft up to about 12 lb. per cubic foot for the hard.

Then these two grades of soft and hard balsa are divided again into three more categories, depending on how the strip of wood has been cut from the tree.

There is the strip with the grain running straight and lengthwise, suitable for all spars, longerons, stringers, etc., and all tubular and circular parts, such as the construction of circular engine cowls with the grain running fore and aft. It also can be used for top decking: but, naturally, anything of this nature behind the C. of G. will be of the lighter and softer grade.

Then there is the cut of balsa with a scallopy appearance. This will not bend so easily as the straight-grained section, and should only be used where stiffness is required, such as formers, ribs, bulkheads or sides of fuselages.

Then there is a third type, chiefly found in thick sections, such as one-and-a-half inches square, and so on. When observing the block of wood from the end, the grain runs diagonally.

This type of block can be used for any part that requires carving, and in fact any solid part. It is also very suitable for propellers.

Now, bearing these particular types of wood in mind, it can be seen that we can build the strongest model with the least amount of wood by exercising our imagination in choosing the right kind of balsa for any particular part.

There is one common fault that most constructors make. The idea is that, in order to achieve strength one must use thick wood.

Of course, there are cases where this is true, but in our search for lightness we must approach the subject from a scientific angle.

Probably the most important of all is the triangulation of parts to achieve rigidity; and to explain this simply, let us take a look at the frame of an ordinary cycle. The frame itself is in the shape of a triangle, with the loads taken at each corner, viz. the saddle, the crank and the steering column. Attached to the saddle corner and to the crank corner is another triangle (although this is sub-divided), with the back wheel attached to its third corner. The whole locks together perfectly rigidly, and it will be observed that the loads are taken down the lengths of the tubes; that is to say, the tubes are in compression.

If, on the other hand, the load was applied between the corners, that is, along the straight part, the whole frame would very easily buckle.

It is the designer's job to split the airframe up into a suitable number of triangles and take great care to see that the loads that are imposed put the respective legs of the triangles in compression and not in tension. Of course, we must not forget that when the covering is applied it will brace everything together, and where no extra load is involved this covering may be quite sufficient.

Where, however, we wish to impose a load, say on a stringer between two formers, such as is imparted by the tightening of the covering when doped, it is far better to use stringers of a deep section than a square section. That is to say, a stringer is far better made of a section $\frac{1}{16}$ in. × $\frac{1}{4}$ in. rather than $\frac{1}{8}$ in. square, although the total cross-sectional area is the same.

Actually, the sizes used will probably be smaller than this, but these figures have been used for simplicity.

This method of using the wood—or metal, for that matter—on edge is the great secret in building to give the maximum strength for the minimum weight. A balsa tube, made of $\frac{1}{32}$ in. wood bent around a quarter of an inch diameter former, which is then withdrawn, will support all the load you will probably wish to apply to it *on end*, provided its straightness is not affected, and it will be ever so much lighter than a solid piece of balsa of the same diameter.

Towards the front of the model, where a little weight is required and loads are imposed from all directions, such as the pressure of the fingers in holding the model during the process of winding, thicker wood can be used to advantage, but even then to use the " on edge method " for bracing is much stronger.

Imagine where the pressure of the hand will be, for instance, and arrange your deep stringers accordingly.

Where formers are attached to the outside of a frame to support stringers, as in the case of an oval fuselage built around a square frame, the writer has successfully used 1/64 in. formers, provided the depth does not exceed about $\frac{1}{4}$ in.—another example of material on edge.

There are times when it is necessary to depart from using balsa, such as the main beam through a fairly large centre section. It will be found that a good piece of hardwood three-ply $\frac{1}{8}$ in. thick, suitably fretsawed out to give radiating legs of about $\frac{3}{16}$ in depth, to take any top or bottom loads, will brace up the whole job and prevent a nasty crack-up. This is clearly seen in the drawing of the Kestrel Trainer, just above the right wing tip.

Some models seem to crack up after every flight, and others go calmly through a complete season with perhaps nothing worse than a crushed longeron. Apart from rough handling, the life of a model depends on the stressing and design of each small part.

This may all seem very complicated, but you will be surprised how easily it all comes to one when you start to build your own design.

Generally speaking, if a frame is rigid *before* it is covered it is too strong. We must not forget the tensioning effect of the covering material.

One other very important thing to remember when cementing or glueing two parts together is always to arrange for the glue to be in compression or in shear, never in tension—that is to say, never allow the glue itself to take any pulling load, and to overcome this difficulty you will probably have to " notch " one piece of wood to another. This may be tedious, but do it; it all helps to improve the model's " uncrackability."

Spruce or birch are seldom used when balsa is obtainable, except in the case of dowels and small fittings, such as cabin frames.

Mention of cabin frames brings us to another point which if clumsily done spoils the whole appearance.

Make the framework carefully, steaming each part where curved, and keep those parts to scale. Make the framework thin enough, even if it means making it of $\frac{1}{32}$ in. square birch or cane. Make it that size, because the celluloid (not cellophane, except on the very smallest of models) will hold all together tightly as in a rigid box formation.

Do not use a cellulose cement on celluloid, as it will spoil the appearance, as one is bound to get a little squeeze-out between the framework and the celluloid. Instead, use an ordinary fish glue. Any surplus can be wiped off, and a thin coat of varnish applied over the joint will waterproof the whole job.

Use as little metal on the model as you

possibly can. Wire, of course, does enter the construction in the form of propeller shafts, landing gear, bracing, and so on; but use the straightest and best plated piano wire; it will pay in the long run.

Knitting needles—steel, of course—make excellent propeller shafts, provided they are softened somewhat by heating to a very dull red over a gas flame and allowed to cool off very slowly. The hook will have to be bent red hot.

By using another knitting needle of the same gauge — probably 16 gauge — and after slightly softening a flat can be filed along three sides to give a triangular section, thus forming a reamer. This tool is then used for reamering out the hole in the bush to the exact size of the propeller shaft. A very true-running shaft is the result. Little things like this all go to make up a perfected whole.

So far we have only dealt with the normal type of model aircraft, consisting of a single airscrew placed in the front of the aircraft, and the rubber motor strung through the fuselage.

There are, of course, more advanced types that the builder may care to tackle when he has mastered the art of the single-engine job as referred to above.

In twin-engined jobs the motors can be attached to a point just behind the trailing edge of the wing in the centre of the fuselage, and then taken outwards to the propeller hooks in the nacelles by suitably designing the wing ribs to accommodate the rubber, as in the author's "Airspeed Envoy." In this case both airscrews turn in the same direction, and not in opposite directions to cancel out the torque, as it was found that as the motors were both offset from the centre line, torque was not very troublesome. What little there was, however, was overcome by using one more loop of rubber on the left-hand motor.

Quite small motors were used, as these two motors were each equivalent to each motor on a two-gear gearbox without the friction of the gears.

The final flexible drive consisted of a tightly wound steel spring, 24 s.w.g., wound on a $\frac{3}{32}$ in. dia. former, and about $\frac{3}{4}$ in. long, and this gave all the flexibility required. We must in passing, give Mr. C. A. Rippon his due share in putting us on to this type of drive, as the whole design depends upon it.

By using this flexible drive all sorts of different types of aircraft become available for scaling down by the model maker. See Fig. 20.

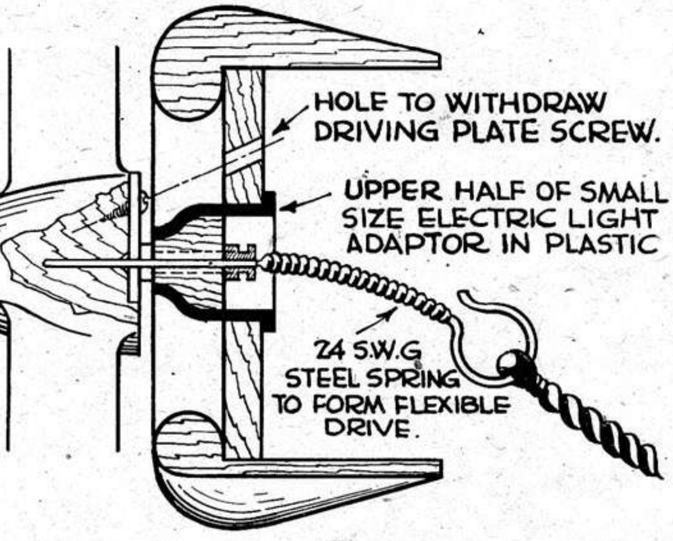

Fig. 20.

Flying-boats with the motor and propeller well up above the fuselage, such as the supermarine "Walrus" and American "Consolidated," all become possible, but with a thrust line in such a position that the builder will require to experiment a lot to get satisfactory flight.

Then there are the "pusher" types, with the propeller behind the main-plane, as in some light 'planes, and the large American Aircuda, with the propellers at the rear of the nacelles.

In fact the field of scope for scale model aircraft engineers is very attractive indeed, and as time goes by so more and more outstanding examples of their ingenuity and resourcefulness will stimulate us all to do better.

THE B.A. "EAGLE"

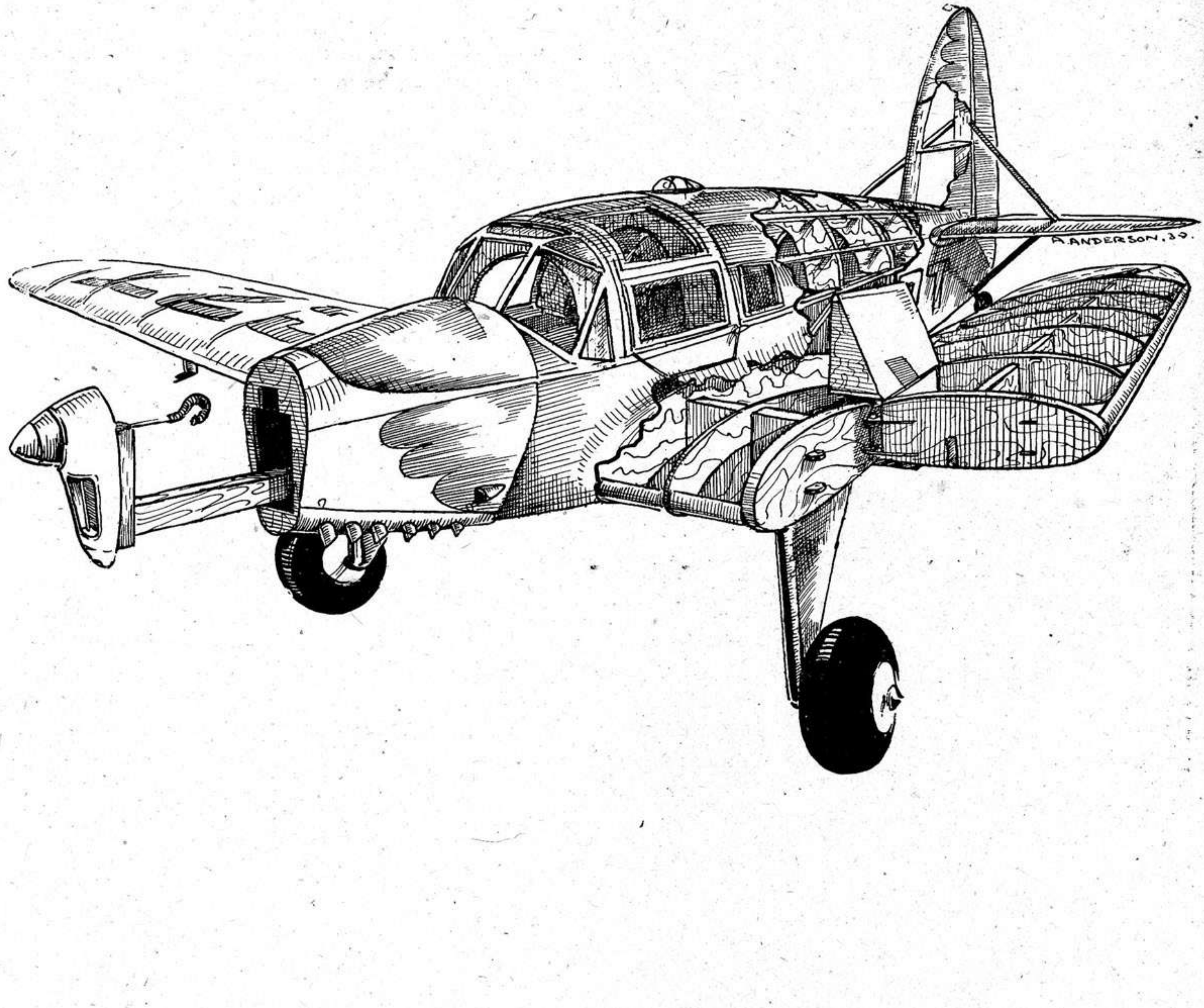

CHAPTER XII

STARTING THE BUILDING

GLUEING. SOLDERING, ETC.

WHEN we start building model aeroplanes, one of the first things we require is a smooth, flat board to work on. The ideal is a fairly large drawing board, but a good pastry board makes an excellent substitute, and a piece of plywood about ½ in. thick is also very good. We also want some greaseproof paper to put over our drawings to prevent the work sticking, and some pins to hold the parts in place. Pins known as French pins have large heads, and are the easiest to deal with.

Before going on with the construction, here are a few notes about glues, or cements, as they are sometimes called.

Glues such as Seccotine and Croid are useful for hardwoods like spruce and birch, and are perhaps the most useful for these. Durofix is suitable for hardwoods, and very good for balsa. It has the added advantage of being waterproof. There are also a number of quick-drying glues for balsa that are also waterproof. Seccotine and Croid may be used for balsa, and there is a range of LePage's glues for various purposes. For sticking the paper or silk covering on the model, a photo-mounting paste like Grip-fix or Bond-fix is best. Quick-drying glues are indispensable for carrying out repairs on the flying-field, as it is often possible to stick two pieces together by holding them in place for about half a minute.

Soldering is a job that is practically indispensable where really good models are concerned, and lots of people seem to find difficulty with it, so perhaps a few notes will not be out of place.

Cleanliness is probably the most important thing, and there is an old saying that is very true, that a job well prepared is half done. The parts to be soldered must be perfectly clean, first using a file or emery cloth and then using a flux to chemically clean it. There are two well-known makes of flux—Fluxite and Baker's. Fluxite is a paste that is useful and convenient for brass, but when it comes to steel Baker's seems more successful, especially with a novice. Baker's make the well-known soldering fluid, which is specially recommended for steel, and also soldering paste, which is very good for either steel or brass. This does not mean that the soldering fluid will not do for brass; it is in fact excellent, but needs more complete washing away afterwards. The soldering " iron " is really made of copper, and must be " tinned " at the tip. To do this, file the tip bright and smooth, and heat the " iron," preferably in a gas flame or a clean fire (the red part) until it is just hot enough to melt a piece of solder on the clean tip. What is known by ironmongers as " blowpipe " solder is the easiest to use, as it is in sticks about ⅛ in. wide. Dip the end of the solder in the flux and hold it in a clean tin lid, or on a piece of tin, and melt off a spot or two with the tip of the " iron." Then rub the tip in the solder until it is coated with solder or " tinned." If the tip has been cleaned well, and the solder does not run freely and stick on nicely, although it is running, dip the stick of solder in the flux, and put a spot on the tip of the " iron." If this does not do the trick, the iron is most likely too hot. Avoid getting the iron too hot, as it takes the tinning off; have it just hot enough to run the solder freely. It takes a little practice to get used to this. If the iron does get too hot, the only thing to do is to plunge it immediately into cold water, and start tinning all over again. The iron must always be kept well tinned, and if the tip seems hard when you file it, get it hot and plunge it into cold water. Never dip the iron into the flux, or in a short time you will find the flux eating into the iron, just behind the tinning. Tinning the parts to be soldered is also a good idea, but is not always necessary. To tin them, clean with a file or emery cloth and smear with flux. Rub with a hot tinned iron, and add a little more solder if necessary, till there is a thin coating all over. Wipe away the surplus with a piece of rag while it is still running. The tinned parts are smeared with flux, held together and touched with a spot of solder on the tip of the iron. Hold the iron there just long enough to run the solder where required. If the parts are large you may have to add a little more solder. When finished, clean away all flux with a damp rag, preferably while the job is still warm. Sometimes, when the parts to be soldered are large, they are " sweated." This is done by putting on a thin coat of solder (tinning) where the joint is to be made, smearing with flux, and holding them together in a flame till the solder melts. The flame of a methylated spirit lamp or bunsen burner is the sort to use. Now a warning. Be very careful not to drop hot spots of solder on the carpet or table-cloth, or you will have the head of the household running you round with the rolling pin!

Something else useful to know is how to make drills that we can use for making holes in brass for gearboxes, parts of undercarriages, etc. It is, like a good many other things, easy when you know how. Very often when we want to drill a hole for a 14 or 18 s.w.g. propeller shaft we have no drill, but a piece of wire of that gauge can be used to make a drill. All we have to do is to file or grind the end to the shape shown in Fig. 21. We grind the two flats on the sides first to make it something like a screwdriver, and then point it. Note carefully how this pointing is done. It forms two V-shaped flats that can be seen in the end and side views. In the side view, that is, the top right in the figure, the outside edge of the flat slopes upward. This is important, as it gives clearance to the metal behind the cutting edge of the drill. Having pointed the end like this, we get it red hot in the fire or gas flame and quickly plunge it into water.

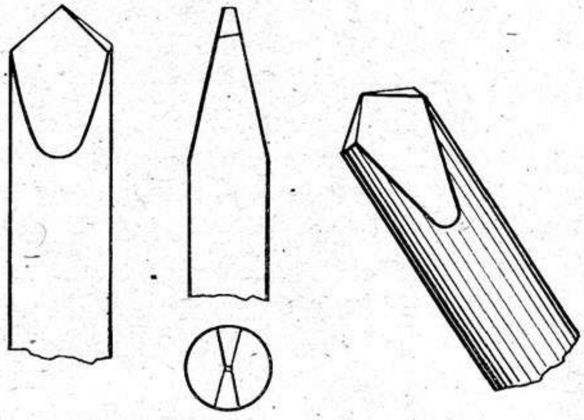

Fig. 21.

CHAPTER XIII

FUSELAGES

TYPES OF STRUCTURES. METHODS OF BUILDING. JIGGING. WINDSCREENS.

WE must bear in mind all the time we are building our model that little things here and there will help to make the finished article more like the real thing. For instance, if we are modelling a fuselage with flat sides, fabric-covered, we can make our model with flat sides to be covered with paper. Similarly, if we are modelling a monocoque fuselage we can make our model with curved frames and cover them with thin sheet balsa. The nose of the machine is almost bound to be made like this, though some noses are best carved from solid balsa and hollowed out. As an example, aeroplanes with " Gipsy " and similar engines could have the nose modelled with sheet balsa, and those with " Rolls-Royce " engines would have the carved nose. This is due to the cowling on the " Rolls-Royce " engines being so much more curved. We can see this difference quite easily by comparing, say, a " Hurricane " and a " Moth." There is another method of reproducing these curved noses, and that is by building a structure of formers and stringers and filling in with small blocks of balsa. We can use $\frac{1}{8}$ in. square stringers and blocks $\frac{1}{8}$ in. thick. The blocks should be a good fit in the spaces, and should protrude a bit, so that when the edges are sandpapered down to the level of the stringers the middle does not show any sign of flatness. Figs. **22** and **23** show the carved and built-up noses. The nose for radial type engines can be made by using circular formers covered with sheet or strips. The strips should be about $\frac{1}{4}$ in. to $\frac{1}{2}$ in. wide, and afterwards sanded smooth. If we are making a nose, say, **4** in. diameter, we can wrap $\frac{1}{16}$ in. sheet round. The grain will have to run fore and aft, and we can cut pieces of balsa to length and stick them together side by side before wrapping them round.

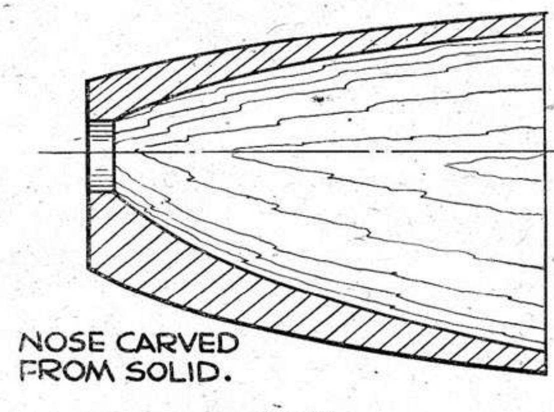

Fig. 22.

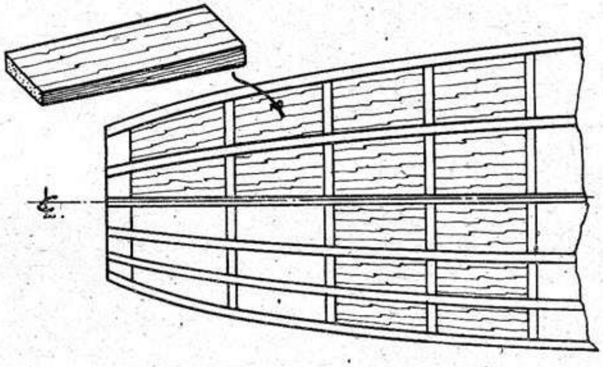

Fig. 23.

There are a variety of ways of building fuselages, each having certain advantages. Sometimes different methods can be combined, as in the rounded top and flat sides of the Miles and Percival machines. We can make the main structure of the fuselage rectangular, and add a superstructure of formers and stringers, as can be seen in Fig. **15**a. If we can arrange one face of this main structure to be flat when finished it will be a little easier to construct. Well now, let's see how we build such a structure. First of all, lay the drawing on a flat board and pin a piece of greaseproof paper over it. Next lay two longerons in place, and hold them with pins. We can then put in spacers at intervals of about two inches. (See Fig. **24**a).

Start with the middle spacers and work towards each end. An easy way to cut the spacers to length is to hold a piece of balsa with the end against a longeron and with a razor blade or knife to mark the position and angle of the inside of the other longeron.

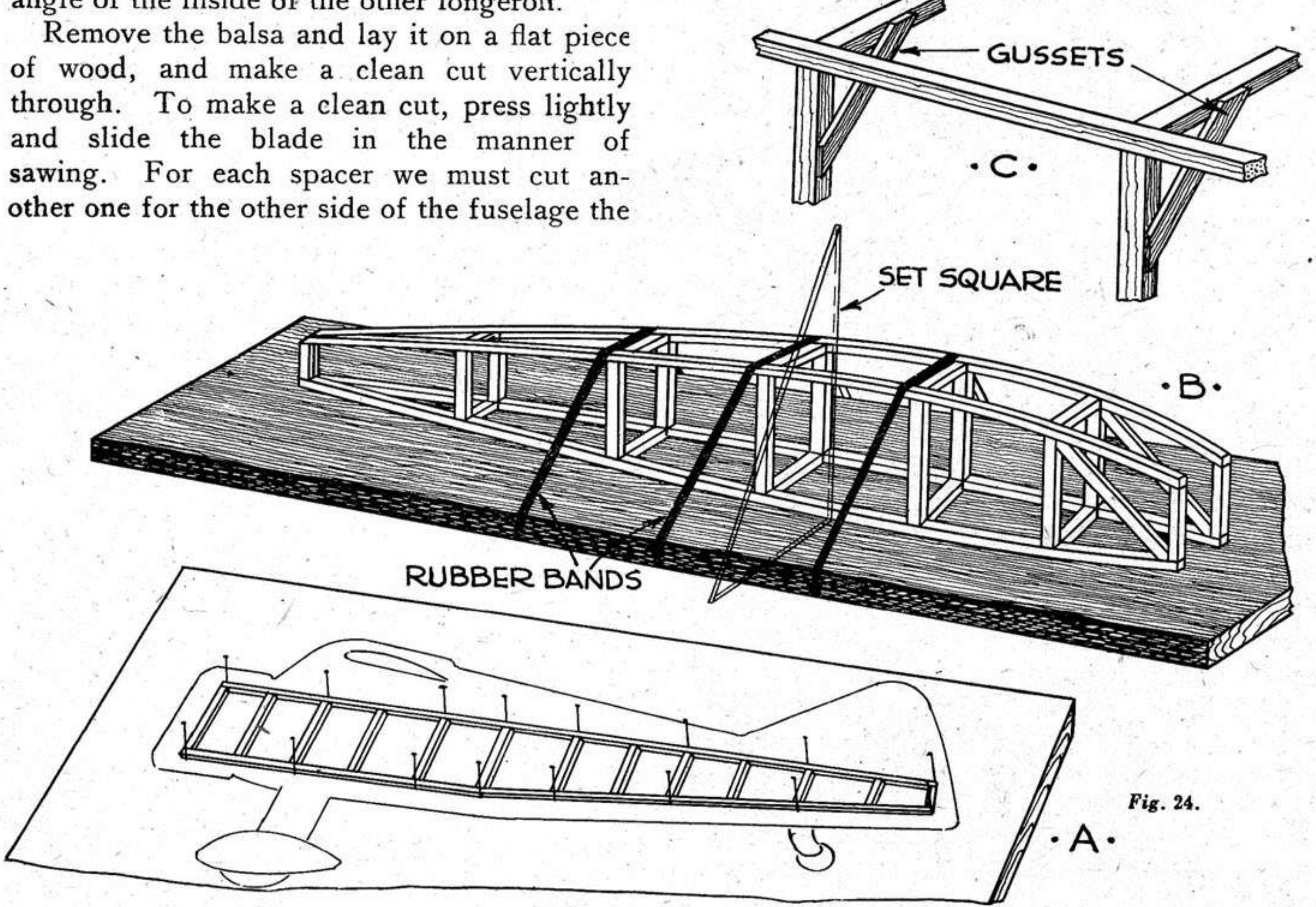

Fig. 24.

Remove the balsa and lay it on a flat piece of wood, and make a clean cut vertically through. To make a clean cut, press lightly and slide the blade in the manner of sawing. For each spacer we must cut another one for the other side of the fuselage the same length, and with the same angles on the ends. Stick the spacers in position by putting a blob of glue on each end and pushing each end against the inside of the longerons. Use a small blob, so that it does not spread too much on the paper. Before removing the side it is a good idea to steam it, as this helps to keep its shape. For steaming we can use a kettle as long as the water does not come above the spout, but be careful not to let it boil dry, or you may find yourself getting into hot water! A very useful gadget can be fixed up by soldering a short piece of tube into an empty milk tin. The sort you make two holes in to empty it is required, with the tube in one, and the other enlarged to take a cork for filling. You can make a good steamer with different jets to fit the outlet; a round hole about $\frac{3}{16}$ in. diameter for steaming structures and a broad flat jet for steaming the paper when the model is covered. A simple affair could be made by putting a large screwed propeller bush into an old dope tin. The hole should not be less than 18 s.w.g., and would be better larger. A washer of some sort—thin ply if you have nothing better—will help to make a steam-tight joint. Do not boil the water too fast or you may blow the lid off. When steaming, hold the balsa right up close to the jet, in the invisible part if possible, but keep your fingers clear, 'cos it's 'ot!

Well now, to get on with the fuselage. When the balsa is dry after the steaming we can remove that side and build another one just like it. Some of the pins will have to be removed, but leave as many in as possible, as it helps to get the second side exactly like the first. If there is any tendency for the balsa to stick to the paper, slide a razor blade between the balsa and the paper between the joints and work it gently along to the joint. By working carefully the balsa will lift clear without breaking or tearing the paper. Do not try to cut with the blade, but use it as a wedge. The next part of the job is to stick these two sides together with spacers in between. We pin a plan view to our board, not forgetting the greaseproof paper, and for this part a narrow board about four or six inches wide is handiest. We stand the two sides on the plan on their flat surfaces and put pins in to hold them in the right place at the middle or widest part. Cut spacers to hold the two sides apart, and stick them in place. If you are using a narrow board you can slip rubber bands over the fuselage and board to hold everything in place while the glue dries. If, however, our board is wide we can still use the rubber bands, only fixed each side with drawing pins. Long thin bands are best, stretched across the fuselage and down each side at an angle of about 45 degrees. See Fig. 24b. Keep the structure square by pulling the bands tighter on one side than on the other. If we put gussets of $\frac{1}{8}$ in. by $\frac{1}{16}$ in. balsa in the corners, as shown in Fig. 24c, the fuselage will be stronger and all the better for it. Before removing the rubber bands, give the structure another steaming, but watch it for squareness if you have not put in the gussets.

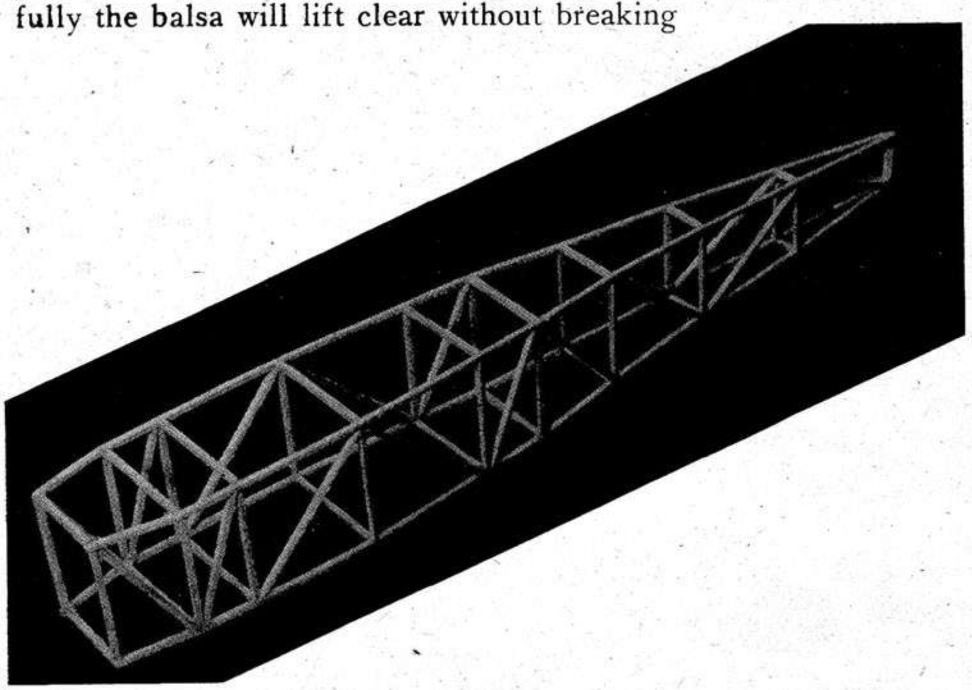

Another method of building this primary structure is to use formers as shown in Fig. 25a instead of spacers. One of these is made from sheet and the other from strips of balsa glued together. The notches in the corners are for the longerons. In this case we do not build the structure on a flat board, but glue the longerons to the formers. This method was used before the

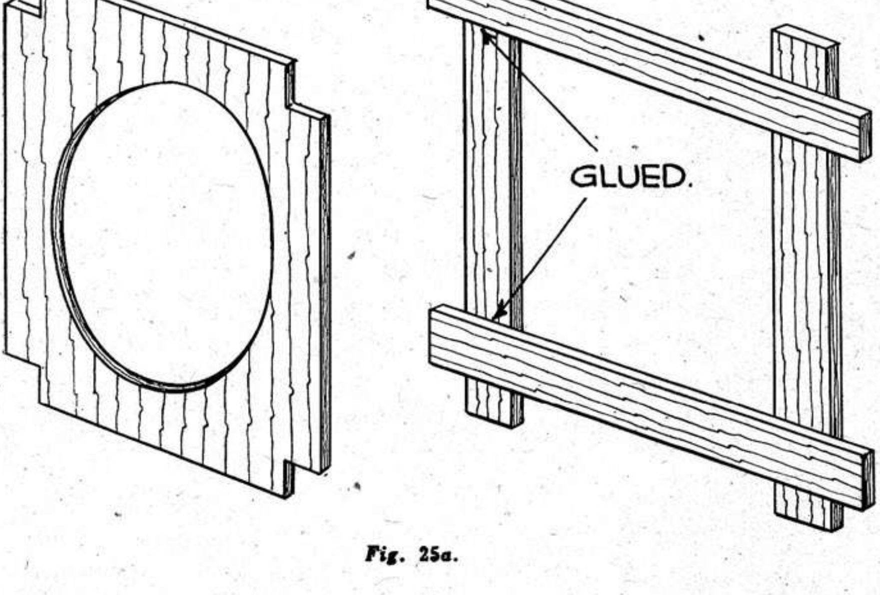

Fig. 25a.

introduction of balsa, when models were made of spruce longerons and plywood formers.

Having built this rectangular structure, we shall now have to add formers and stringers as previously illustrated in Fig. 15a.

Formers for a model up to about 30 in. span could be made from $\frac{1}{32}$ in. hard sheet balsa, or, better still, two thicknesses of soft balsa glued together with the grain crossing. In this case it is better to stick the balsa together before cutting it. When cutting single thicknesses, always cut into the grain, and only a bit of a curve at a time. Fig. 26 explains pretty well how to do it, and it depends on how sharp the curve is as to how many cuts you need to make.

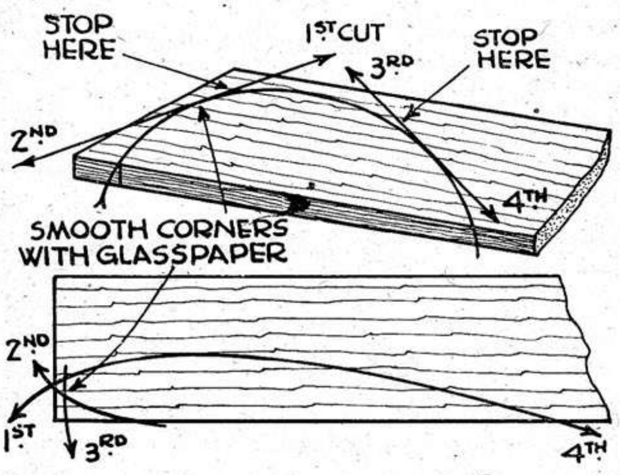

Fig. 26.

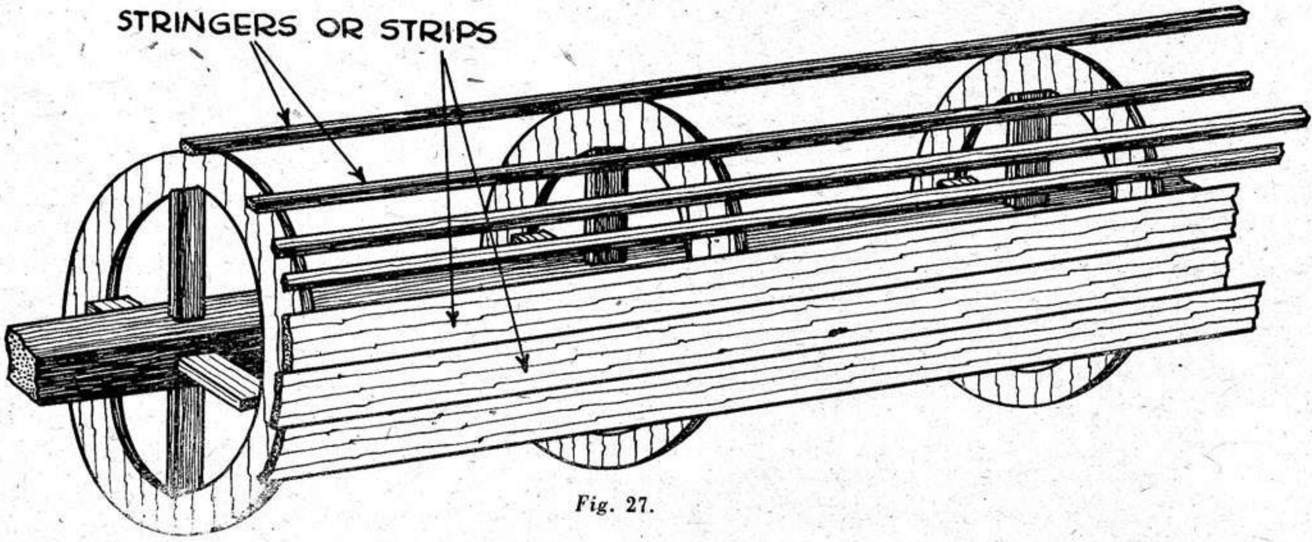

Fig. 27.

In this way you will tend to split the waste wood rather than the former or wing rib, or whatever we are cutting out. For cutting out the balsa you can use a razor blade broken off across the corners, a pen-knife with the point kept razor sharp on an oilstone, or a special balsa cutting tool. With this special tool we can get a variety of blade shapes for various work, such as hollowing out nose-blocks and cutting holes in wing ribs to lighten them.

Now for rounded fuselages that are not made with a rectangular primary structure. One method is to cut out the formers and hold them in place with pieces of packing on a straight, square rod that passes right down the fuselage, while you glue on the stringers or planking. This is shown in Fig. 27, while a variation of it is shown in Fig. 28. In this latter the formers are slotted to take a strip of thick ply that must be quite straight. It should be as thick as possible, and as wide as can be got into the fuselage.

Another method, shown in Fig. 28, is to use four " master " stringers, keels, or backbones, or whatever they are. We can make these stringers (or whatever they are) from $\frac{1}{16}$ in. hard balsa sheet, and they should be about $\frac{1}{8}$ in. to $\frac{1}{4}$ in. wide, and must be cut to the required curve. The formers should be slotted for the stringers, but not to the full depth. We want them to stand up above the formers a little, the same amount as the rest of the stringers.

The next method of building rounded fuselages is to make one half at a time. For this we cut the formers in halves and stand them on the drawing while we put the stringers or planking on. (See Fig. 29.) The second half must, of course, be made opposite to the first, and this is most easily done by turning the drawing upside-down if it is on tracing paper, or we can put carbon paper underneath when the drawing is made, so that we get a drawing in reverse on the back.

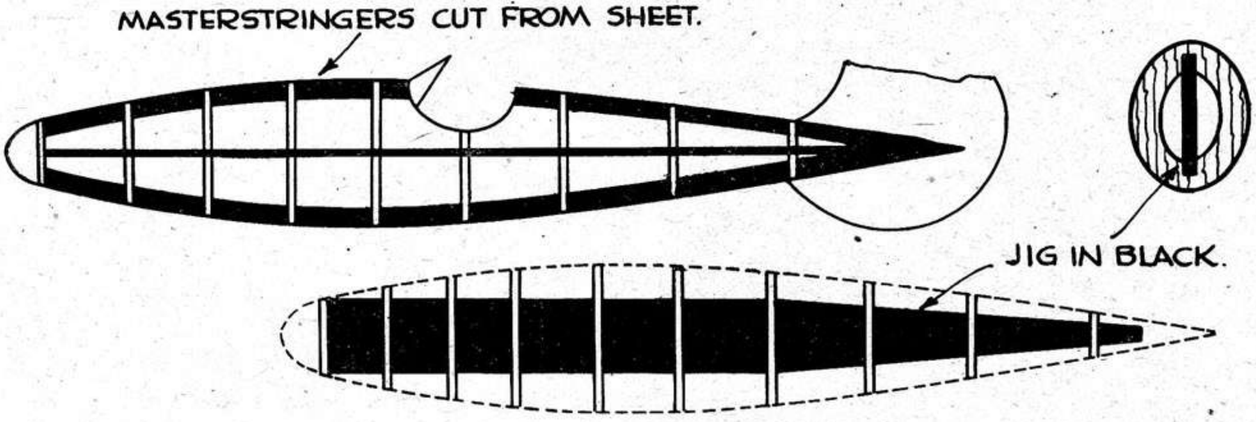

Fig. 28.

Mr. H. J. Penny has devised a rather ingenious method of combining the master stringer idea with the fuselage built in halves. The sides are built on a piece of plate glass, such as an old windscreen, and there is then no difficulty in getting the two sides opposite. To make the first side, we lay the glass over the drawing and stick the " master stringers," which in this case are the keel and backbone, to the glass. A pair of keels and a pair of backbones are required, and we must allow for the thickness of the two when cutting the formers. After doing one side like this, we turn the glass over and rest it on blocks of wood or a pile to books, to build the other side. Fig. 30 shows the finished structure on the glass. If balsa covering is used, it can be put on at this stage. This structure can be released from the glass with the aid of a razor blade and then glued together.

There is still another way of building fuselages that is excellent for small models. The idea is to cut the fuselage sides out of **1/64** in. or $\frac{1}{32}$ in. sheet and glue them to the formers. Both sides must be exactly alike, and the front and rear formers should be glued on first, making sure that the sides are dead level with each other. We can stand these sides on blocks of wood while the glue sets, and the intermediate formers can be added. To put these in, spread glue along the sides of the formers, gently ease the fuselage sides apart with two fingers while the former is put in. Such a fuselage, partly completed, is shown in Fig. **31**. Most of the present-day light aeroplanes have flat sides

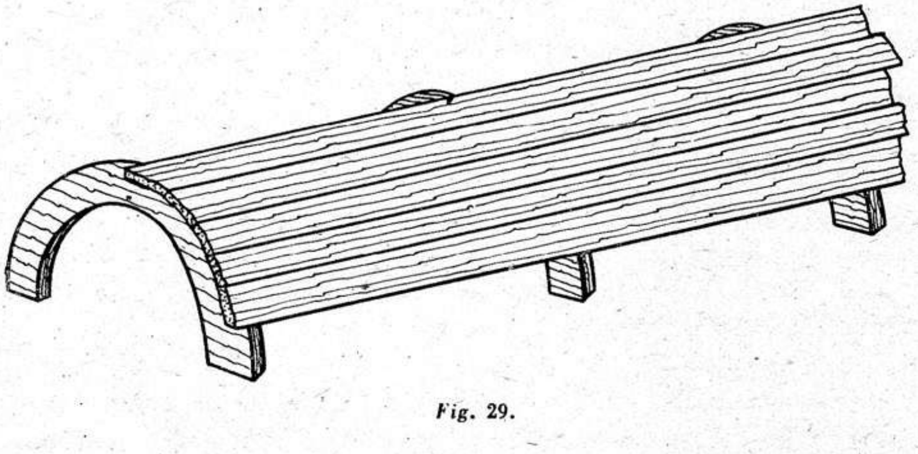

Fig. 29.

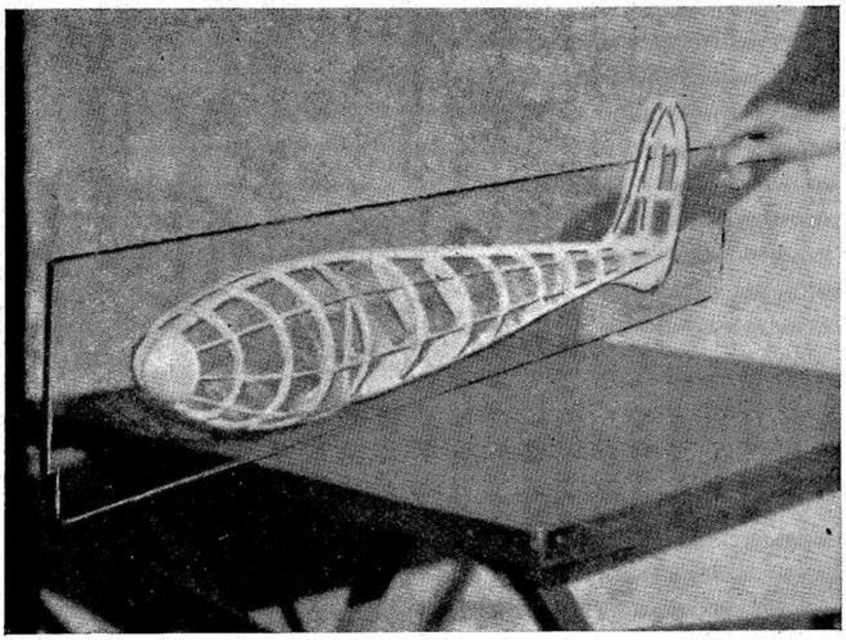

Fig. 30.

and bottom, with a straight tapered and rounded top that is very conveniently made in this way. Before trying to stick the top on the fuselage, cut out the balsa sheet and cover it with tissue paper. With the paper on the outside, gently bend the balsa round a circular rod such as a pencil or broomstick, according to the size of the curve. The grain of the balsa will have to run lengthways of the rod. Rub the balsa hard on the road as you bend it round. This method of bending will serve for any sheet balsa parts; but if the bend is very sharp it is best to soak the balsa in boiling water for a few minutes first.

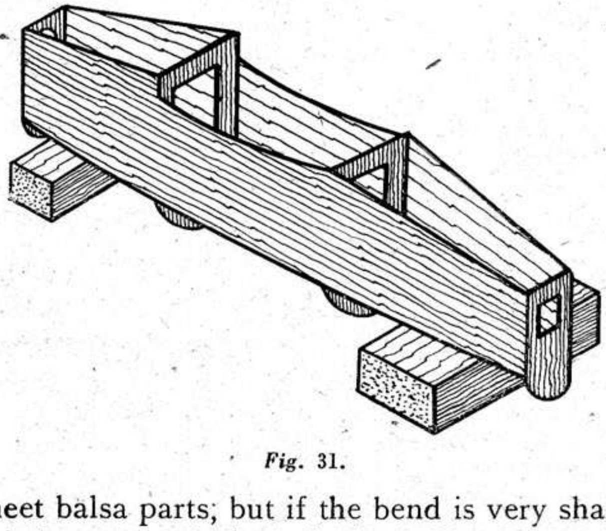

Fig. 31.

Most of the machines we are likely to model will be of the cabin type, and windows and windscreens for these are dealt with in the chapter on finishing, so we will make a few notes here on windscreens for open cockpits.

Some windscreens, like those on the " Swallow " and " Hart," are made from three flat sheets of glass or other transparent material. For our model we can use celluloid such as that used for motor-car sidescreens. It is about half a millimetre thick, and is much better than the thin stuff usually sold for model purposes, which, however, is quite all right for cabin windows. Our best plan is to cut patterns first, from thin card or sheet balsa, and adjust them to fit. We then cut the celluloid to the patterns. We cannot bend the celluloid to a sharp angle without it cracking, so we shall have to cut it to the three flat pieces and stick them together. Use only just enough glue for the job, and if possible have some blocks or wedges of wood to hold them in shape while the glue sets.

In some cases we have windscreens made from flat sheet bent round, as used for some " Moths." These are usually D- or moon-shaped, and here again half mm. material is best. Our patterns can be cut from thin card or thick paper. They are sometimes a bit tricky to fix in place on the fuselage, but quick-drying glue will help us, since we can hold

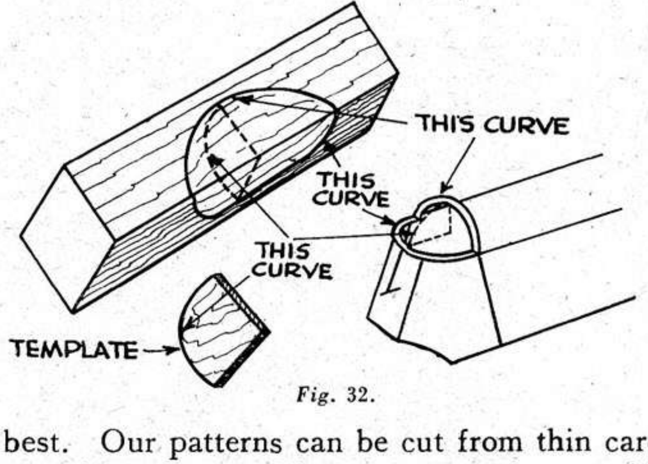

Fig. 32.

things in place while it sets. It is best to glue the middle first, and work towards the sides. Use the glue very sparingly.

Windscreens cannot always be made from flat sheet celluloid, due to a double curvature, as, for instance, in the Miles machines, and the top front of the Lysander. Sometimes we are lucky enough to find curved articles of clear celluloid, such as wool containers and dishes, that have a suitable curve. Failing this, there is a method by which we can make the shape we want from a piece of flat celluloid such as is used for motor-car sidescreens. To do this we shall have to hollow out a block of wood to the shape we want. In most cases the curve will not extend round more than 90 degrees, that is, from a vertical to a horizontal line, looking on the side of the model. Suppose this is the case, as it most likely will be, this is how we should go about the job. On one side of a short square strip of wood, such as deal or pine, mark off the curve over the top of the screen, starting from one corner, and on the adjacent side mark off the curve round the front of the screen, so that the two curves join up at their ends (see Fig. 32). Now we make a template of the curve in the middle, that we see when looking at the side of the machine. The next job is to hollow out the wood to the curves, using the template to get the curve shown dotted. This hollowing out is best done with a gouge and finished with sandpaper. We want another piece of wood carved to fit inside this hollow, with clearance all round of the thickness of the celluloid. If we heat the celluloid in front of a fire it will soften sufficiently to take the curve when pressed between the two blocks. Boiling water is hot enough, but is inclined to make the celluloid cloudy, but it is likely to flare up if held too near an open fire. If we use a piece of celluloid that is only just big enough, that is, to leave about $\frac{1}{8}$ in. to be trimmed off all round, there will not be so much danger. Then again, so as not to burn our hands, it is best to hold the celluloid in a pair of pliers.

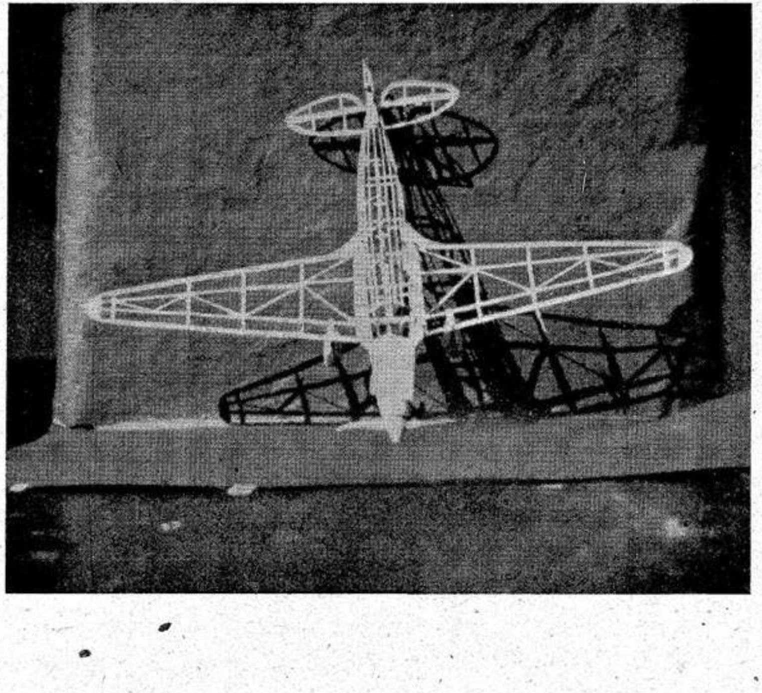

This model is the "T.K.2," a high-speed monoplane of De Havilland design. Full-size plans for building a 16¼ in. span model are at the end of this book.

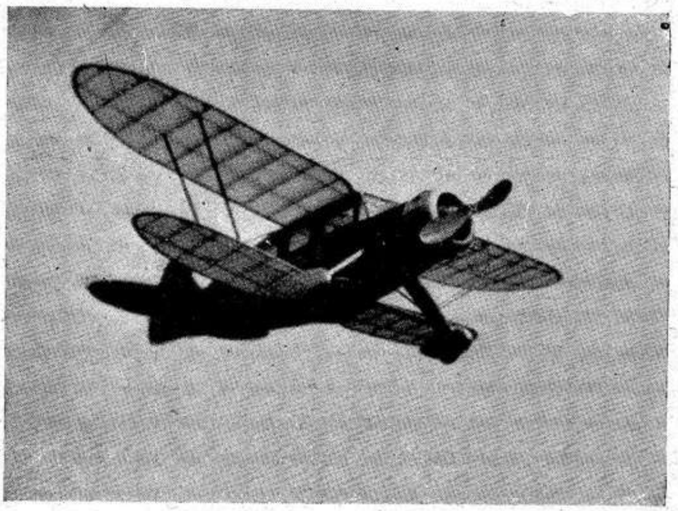

Biplanes are very popular with builders of scale model aircraft. The top photo shows an American 'plane, a "Waco" Custom Cabin five-seater. Span of the model is some 50 in. Below is a very old war-time favourite, the S.E.5a.

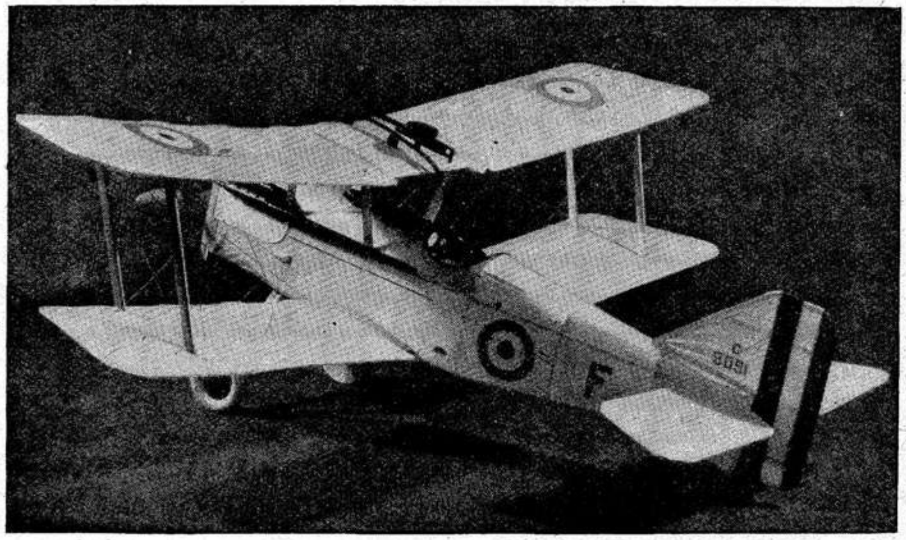

A fine flying model of the Hawker "Fury" built by Mr. Hastings is shown in this photo. Some details of the construction of this model are on page 61. (The propeller is not to scale, but is the one used for flying.)

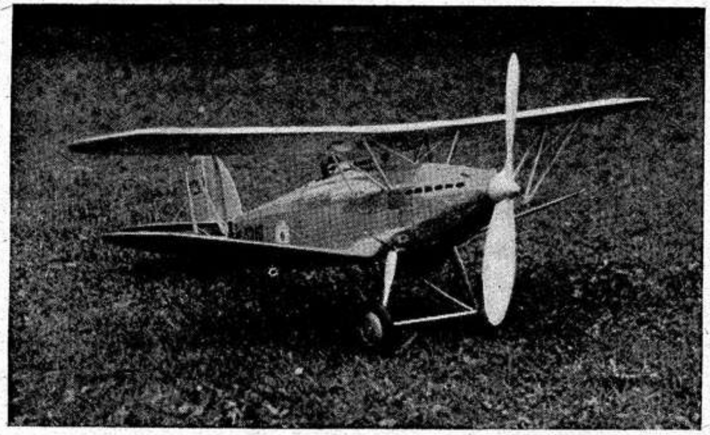

CHAPTER XIV

WINGS

SECTIONS. SPARS. TIPS. CENTRE SECTIONS. FIXINGS.

FIG. **33** shows some of the commonest wing sections in use for full-size aeroplanes, and others are usually only slight variations of these. R.A.F. **15** is typical of light biplane sections, and while being very good aerodynamically it is not very convenient for models. The trouble is that to make it strong enough for a model would result in too much weight. Clark Y is typical of the heavier biplanes like the Hart and Fury, and light strut-braced monoplanes like the Wicko and the Comper Swift. R.A.F. **34** is the type used on cantilever monoplanes like the Wellesley, Mosscraft and the Moth Minor. It is also used on some strut-braced monoplanes like the Lysander and Taylorcraft. Gottingen **436** is another section similar to Clark Y, though one writer considers it better, and is that most likely used on machines of German origin, such as the British Aircraft "Swallow."

We need a number of wing ribs cut out to this section, enough to be spaced about **1** in. or $1\frac{1}{2}$ in. apart along the wing. If the wing is parallel it is best to cut one rib to size out of $\frac{1}{16}$ in. ply and use this as a template or pattern for cutting out the proper ribs. We can make these from $\frac{1}{16}$ in. or $\frac{1}{32}$ in. balsa. If the wing is tapered we shall have to cut out a number of different sized ribs, the length of each being obtained from the drawing. We shall require two of each size, one for each half of the wing. Getting these different sizes the right shape involves a little work. Anyone who has an enlarger for photographs can turn it to good account for this job. One way is to make a tracing of a small rib that we can put in the enlarger in place of the negative, or a better way is to photograph a large drawing of the section and use the negative. We can now enlarge the rib to any size we like. There is no need to be critical about the sharpness of the image, and we can in fact use the focusing adjustment to get the image the exact size we require. We can use any odd bromide paper and need not be particular about the exposure as long as we can see the outline when developed. When the prints have been finished and dried we cut them out and use them as patterns for cutting the ribs.

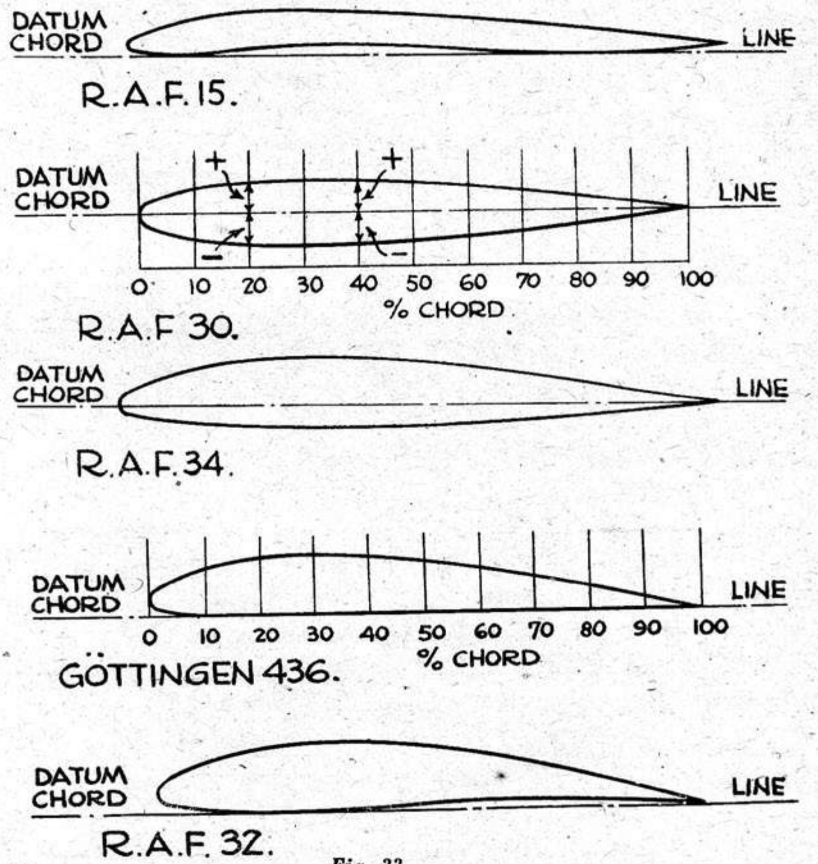

Fig. 33.

We can also obtain blue prints or drawings of wing ribs of various sizes from some dealers that prove very useful. We can usually find a set of ribs to suit by adjusting the spacing of them. Suppose the wing tapers from 4 in. to 2½ in., and the span of the tapered part of one wing, that is, on one side of the fuselage, is 15 in. From the blue print we pick out a range of sections from 2½ in. to 4 in. that vary ⅛ in. at a time in length. The difference between 2½ in. and 4 in. is 1½ in., and the variation is ⅛ in. per rib, or ⅛ in. between one rib and the next. There are twelve ⅛ in. in 1½ in., so this means we shall have twelve spaces in 15 in., so each space will be 1¼ in. If the ribs on the blue print vary ¼ in. each instead of ⅛ in., we must cut ribs to fit 2½ in. apart, and cut by guess for those in between. It is fairly easy to guess the correct shapes if we cut out the rib roughly a bit on the large side and then hold it between the next rib smaller and next larger.

PROFILES OF AEROFOILS.

Distance from L.E. %	Gottingen 436.		Clark Y.	
	Upper.	Lower.	Upper.	Lower.
—	2	—	—	—
0	2·50	2·50	3·50	3·50
1·25	4·70	1·00	5·45	1·93
2·5	5·70	0·20	6·50	1·47
5	7·00	0·10	7·90	0·93
7·5	8·10	0·05	8·85	0·63
10	8·90	0	9·60	0·42
15	10·05	0	10·69	0·15
20	10·25	0	11·36	0·03
30	11·00	0	11·70	0
40	10·45	0	11·40	0
50	9·55	0	10·52	0
60	8·20	0	9·15	0
70	6·60	0	7·35	0
80	4·60	0	5·22	0
90	2·45	0	2·80	0
95	1·25	0	1·49	0
100	0	0	0·12	0

Sometimes we may want to use a section for which we have no drawing, and in any case some of us prefer to draw them out ourselves to just the size we want. After all, it is quite easy enough when you have the profile dimensions, as they are called. A table of these dimensions is included, because they are a great advantage when dealing with certain tapered wings. The sections given are the most suitable of those we are likely to come across. The method of drawing these wing or aerofoil sections is illustrated in Fig. 33. We start off with the chord line, and mark the chord the length we require. Then we divide it up into percentages and erect perpendicular lines to correspond with the column of values headed per cent chord. To get the height of these lines we multiply the values in the other columns by the length of the chord. Sometimes these values will come above the chord lines for the bottom curve and sometimes below or on the line. The point marked 30 per cent chord is about the best place to arrange the main spar. Section R.A.F.30 is symmetrical and is used for tail-planes and rudders.

PROFILES OF AEROFOILS.

Distance from L.E. %	R.A.F. 30. Top and bottom.	R.A.F. 32.		R.A.F. 34.	
		Upper.	Lower.	Upper.	Lower.
0	0	0·0342	0·0342	0	0
1·25	0·018	0·0556	0·0196	0·0198	−0·016
2·5	0·025	0·0652	0·0150	0·0282	−0·0214
5	0·035	0·0784	0·0088	0·0411	−0·0281
10	0·048	0·0972	0·003	0·0583	−0·0353
15	0·054	0·11	0·0008	0·0697	−0·0391
20	0·059	0·119	0	0·0772	−0·0416
25	0·062	—	—	0·0814	−0·0426
30	0·0632	0·12	0·003	0·0832	−0·0432
35	0·063	—	—	0·0827	−0·0433
40	0·062	0·13	0·007	0·0808	−0·0432
45	0·06	—	—	0·0774	−0·0426
50	0·0566	0·1246	0·011	0·0721	−0·0411
55	0·0526	—	—	0·0659	−0·0393
60	0·0478	0·1106	0·0146	0·0587	−0·0369
65	0·0428	—	—	0·0513	−0·0343
70	0·037	0·091	0·016	0·0431	−0·0309
75	0·0312	—	—	0·0349	−0·0271
80	0·025	0·0616	0·0146	0·0270	−0·023
85	0·019	—	—	0·0195	−0·0185
90	0·013	0·036	0·0092	0·0126	−0·0134
95	0·007	0·0198	0·0052	0·0064	−0·0076
100	0	0·001	0	0	0

If we are making a tapered wing we do not need to work out the dimensions for all the ribs; we can do it by drawing as shown in Fig. 34. We draw out the largest and smallest ribs on the lines XX and YY and equally divide up the space between the two to suit the number of ribs we are using. We now divide each rib into the same number of parts, say at every 15 per cent, as at A, B, C, D, E, and A2, B2, C2, D2, E2, and join up with straight lines.

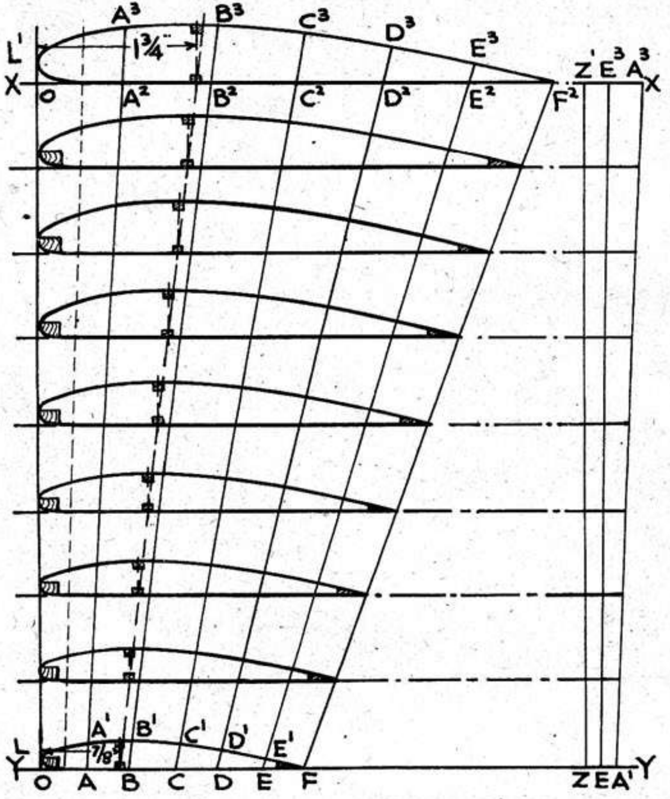

Fig. 34.

Next we draw a vertical line ZZ, and mark off the distance AA1 from Z to A1 and A2A3 from Z1 to A3. Now, by joining up the line A1A3 we find the height of each rib on the line AA1A2A3 by measuring the distance between the lines ZZ1 and A1A3 alongside that rib. The same procedure is carried out for each of the points A, B, C, D, E, etc. The position of the main spar is shown for a wing tapering from 6 in. to 3 in.

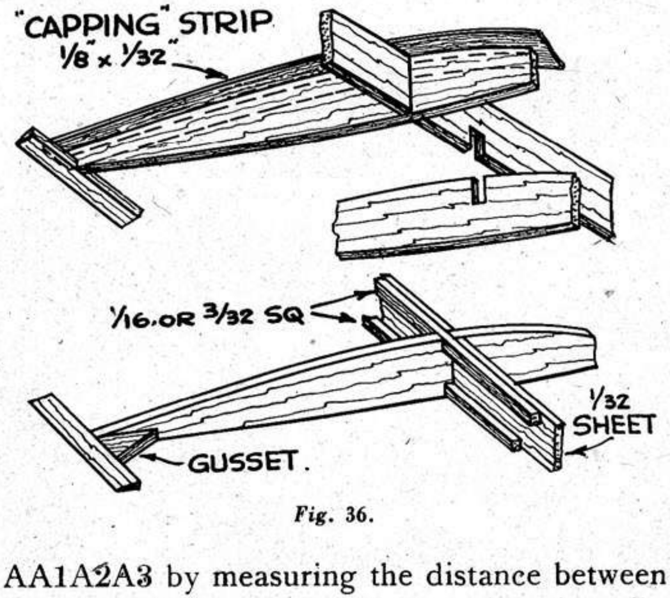

Fig. 36.

Sometimes on a tapered wing the section is not constant, but varies in thickness/chord ratio like the B.A. "Swallow." It may be that the depth of the section at the tips is 10 per cent of the chord, and yet at the centre section it may be 20 per cent. In this case the same ordinates are used for plotting the wing section, but multiplied by 2, or if it is 15 per cent multiply by $1\frac{1}{2}$. By using the drawing method it is easy enough to get the depth of all the intermediate ribs. Making the rib or section thicker than is correct is called "blowing it up." When each rib has been drawn it is cut out and used as a pattern. If the wing is not tapered very sharply we can cut out the ribs satisfactorily by making patterns of the largest and smallest ribs from $\frac{1}{8}$ in. ply and then sandwich all the ribs, cut out roughly, between these two patterns. If we now cut across from one pattern to the other, as shown in Fig. 35, all the ribs will be the correct shape. We can cut slots for spars at the same time.

If we use $\frac{1}{32}$ in. balsa for the ribs, when they are about 3 in. or more in length they will need stiffening. The amount of stiffening will depend on the strength of the trailing edge spar. With a strong spar we need not stiffen the ribs so much, but it is best to keep the spar on the light side and have strong ribs. One way we can deal with the ribs is to make small gussets of $\frac{1}{32}$ in. balsa about $\frac{3}{4}$ in. by $\frac{1}{8}$ in. and glue

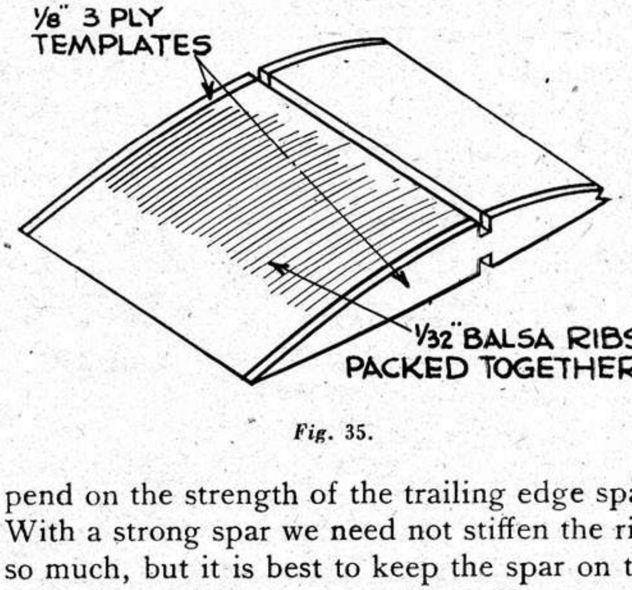

Fig. 35.

them in the corners between the ribs and the trailing edge spar. A better way, however, is to stick a strip of $\frac{1}{8}$ in. by $\frac{1}{32}$ in. balsa along the top or bottom, or both, edges of the rib to lap over the T.E. spar. See Fig. **36**.

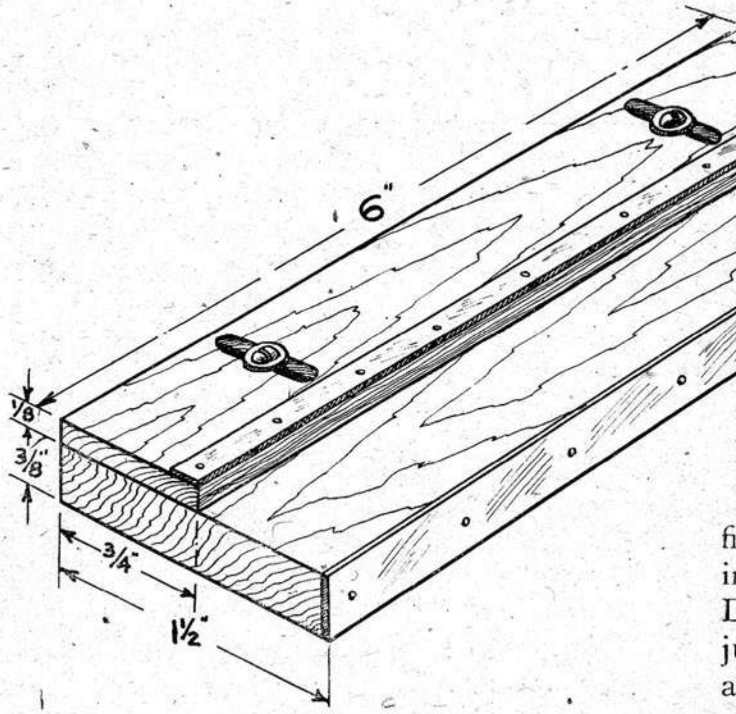

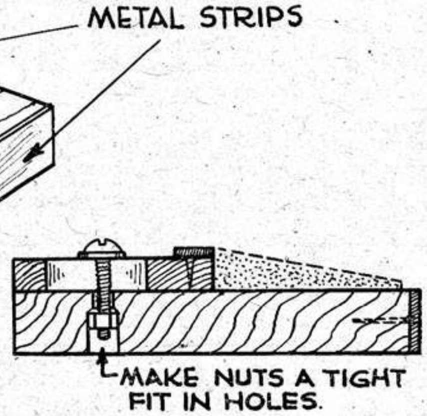

Fig. 37.

The trailing edge spar can be $\frac{1}{8}$ in. by $\frac{1}{16}$ in. balsa for a light one, or $\frac{1}{4}$ in. by $\frac{1}{8}$ in. for a heavier one. We can make a better spar, though, by forming a V section of two pieces of $\frac{1}{32}$ in. balsa $\frac{1}{4}$ in. wide, glued together. These spars will do for most models, providing the ribs are not more than $1\frac{1}{2}$ in. apart, but the built-up V could be made half the size for a small model. If we use $\frac{1}{8}$ in. thick balsa for the trailing edge it will need tapering to a V section, and for this we can make up a gadget to assist us, and it is shown in Fig. **37**. First we want two pieces of hard wood, such as oak, though deal would do. One piece should be **6** in. by $1\frac{1}{2}$ in. by $\frac{3}{8}$ in. and the other **6** in. by $\frac{3}{4}$ in. by $\frac{1}{8}$ in. In the smaller piece we make two slots about $\frac{3}{8}$ in. long, and wide enough to allow a small bolt to slide along. In the larger piece we make two holes for the bolts, and enlarge them underneath so that we can sink the nuts in. The sketch makes it clear. On the edges we nail or screw strips of brass or steel about $\frac{1}{32}$ in. thick, to prevent damage to the wood. We want a large washer under the head of the bolt, so that it will not jam in the slot. By putting the balsa on the step we can shape it down with a knife or razor blade and finish with a piece of glasspaper. This is best in a strip about $\frac{1}{2}$ in. wide, glued on to a stick. Don't try to cut too much with the knife; it is just as easy with the glasspaper. If we want a tapered spar, we can make a parallel one and cut the surplus off the thick side.

For the leading edge spar we can use $\frac{1}{8}$ in. by $\frac{1}{16}$ in. balsa or $\frac{1}{8}$ in. square, for almost any size model, providing we have ribs spaced less than $1\frac{1}{2}$ in. apart. Ribs farther apart than this need a stronger leading edge and do not look so good in the finished model.

The main spar is the one we can most usefully vary for different-sized models, and by always making this as deep as possible the variation we require follows as a matter of course. One of the simplest ways we can make such a spar is to use $\frac{1}{16}$ in. sheet balsa about $\frac{1}{16}$ in. less in width than the depth of the ribs. In this way we get a tapered spar with a tapered wing, which is all to the good. We can fit spars and ribs together by cutting slots half-way down from the top of the spar, and corresponding slots in the bottom of the ribs. We can make a better spar, though it is a little more trouble, by using $\frac{1}{16}$ in. or $\frac{3}{32}$ in.

square balsa top and bottom, with a web of $\frac{1}{32}$ in. sheet glued across. Either this web will have to be in pieces between the ribs, or the ribs must be cut in two and stuck on fore and aft. Cutting the ribs is really the best. A spar made like this, using $\frac{1}{16}$ in. square balsa, is strong enough for a model 4 ft. span weighing 8 oz. The spars are shown in Fig. 36.

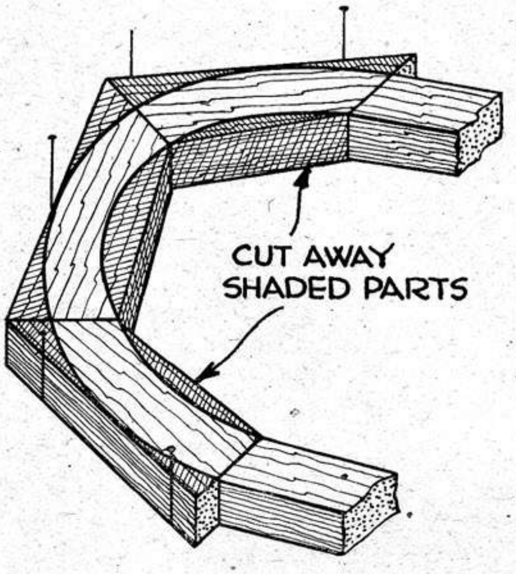

Fig. 37b.

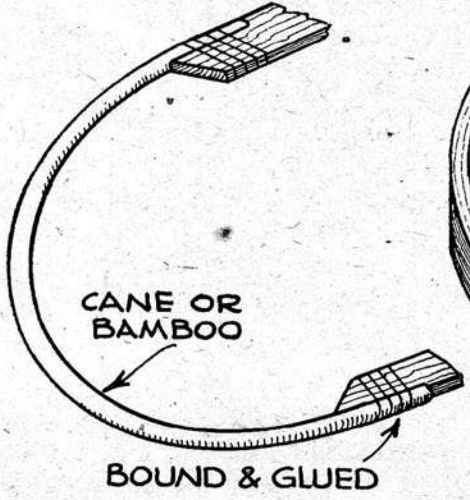

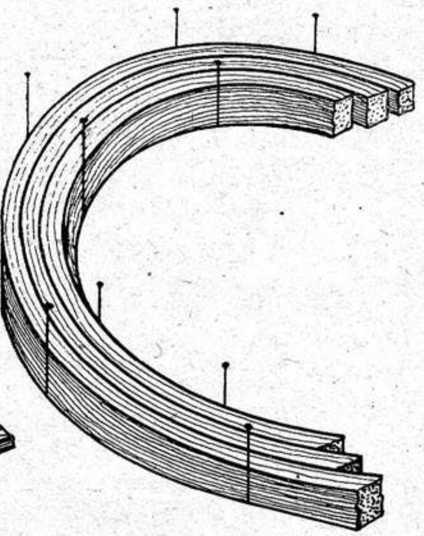

Fig. 37a.

A new method of construction as far as spars and ribs are concerned is that used on the Airspeed Envoy, of which there is a photograph on page 12. The spar is cut from sheet to the full depth of the wing, and is slotted top and bottom for the ribs. The spar is lightened with oblong holes between the ribs, and the ribs also have oblong holes so that they can be threaded on to the spar and turned at right-angles to fit the slots. This will be clear from the photograph.

The wing is usually built in two parts, one for each side of the fuselage. In this way we can build each half on a flat board, and either join them together afterwards or attach them separately to each side of the fuselage. We can with advantage build the wing over a drawing (which must be protected with greaseproof paper), so that we get the ribs and spars in the right place. Spars and ribs can be held in place with pins stuck upright each side, and we must make sure everything is square and true while the glue dries. It is best, if we can manage it, to put spots of glue in the slots before the spars are put in, but unless we can work very quickly we shall be unable to do this with quick-drying glue. If the ribs have a flat bottom surface they will stand on the board nicely, and the T.E. spar can be pinned to the board, but if the ribs are a section like R.A.F. 34 we shall need some packing under this spar. For this we can use a strip or two of balsa to lift up the T.E. spar till it is level with the L.E. spar with the main spar resting on the board. Remember to make a wing for each side, but in the case of a parallel wing we may have no more difference than the end on which we fix the tips.

Well, now let us see how to make wing tips. One simple method that is very popular is to make them from sheet about $\frac{1}{16}$ in. thick. We cut the sheet into wide strips so that three or four can be joined together, as shown in Fig. 37a. The strips should be about $\frac{3}{8}$ in. or $\frac{1}{2}$ in. wide, and we can see how many to use by laying them on the drawing. The easiest way is to lay on the pieces that join up with the leading and trailing edges first, and pin them in place. Then we can join up in between with one or two more pieces, glued in place. Before cutting the outline to shape it is best to lift the parts gently from the board and put another spot of glue on each side of the joints. To get the shape we can lay a piece of tracing paper over the plan and trace the inside and outside lines, and cut out the paper to the pattern of the tip. We can glue this pattern to the balsa and cut it away each side. It is then ready to put on the wing. Another method of making tips is also shown in Fig. 37b. To make this we stick pins all round the outline of the drawing, and put three or four pieces of $\frac{1}{16}$ in. by $\frac{1}{32}$ in. balsa edge up on the plan, well glued together. The best way is to use one of the slower drying glues and stick the pieces together before putting them on the plan. The idea of using " slow " glue is that we can put the glue on, squeeze the pieces together, wipe off the surplus glue and bend them to shape before the glue begins to set. The pins on the inside of the bend hold the pieces together and to the shape of the bend. Put the middle ones in first. If the bend is very sharp we shall have to steam the balsa to be able to make it take the bend without cracking. We can also make wing tips from light reed cane or bamboo bent to shape and steamed if necessary, bound and glued to the leading and trailing edges.

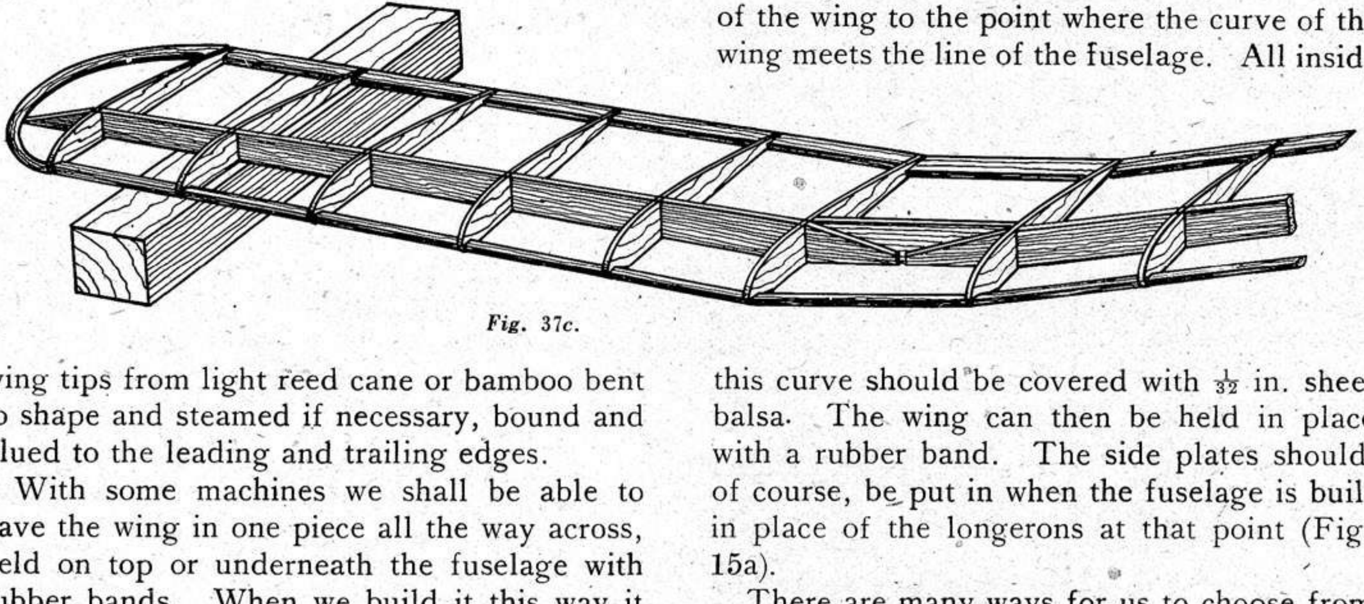

Fig. 37c.

With some machines we shall be able to have the wing in one piece all the way across, held on top or underneath the fuselage with rubber bands. When we build it this way it is best to leave the main spar a bit long at the centre of the wing, so that when the two halves are fixed together the two main spars nearly touch. To fix the two halves together we put them on a flat board with the centre ribs the correct distance apart, which will most likely be the width of the fuselage, and raise the tips on blocks of wood, or match boxes or something similar. The main spar should be shaved off at the bottom, so that the ribs lie flat on the board. Fig. 37c shows the wing set up. We must put pins in to hold things in place while we put in the joining pieces. For these we use pieces of the same section as the leading and trailing edges, cut to length so that they are a good fit; that is, not tight nor loose enough to shake. To join the two parts of the main spar we can use a piece of $\frac{1}{16}$ in. sheet cut to a good fit and glued on the sides. If we have a large, heavy model we can use two pieces of sheet, one on each side. If we want an extra strong job we can cover the centre section with 1/64 in. or $\frac{1}{32}$ in. sheet balsa. This will be useful if we are fitting the wing under the body. When fitting the wing this way, one of the best methods is to cut a piece out of the bottom of the fuselage to take it. Where we cut away the bottom longeron we must insert a plate of sheet balsa about $\frac{1}{16}$ in. or $\frac{1}{8}$ in. thick. This is cut to the curve of the top of the wing, and should continue under the front of the wing to the point where the curve of the wing meets the line of the fuselage. All inside this curve should be covered with $\frac{1}{32}$ in. sheet balsa. The wing can then be held in place with a rubber band. The side plates should, of course, be put in when the fuselage is built in place of the longerons at that point (Fig. 15a).

There are many ways for us to choose from for fixing the wing to the fuselage, some of which will do for either high- or low-wing machines. One such method is shown in Fig. 38. We can make the tongue $\frac{1}{8}$ in. to $\frac{1}{4}$ in. thick and 1 in. to 2 in. wide, according to the size of the model, and the box can be made from $\frac{1}{16}$ in. sheet let into the first two ribs. We can, if we wish, cut away some of the balsa in the tongue to make it lighter, but if so we must leave a strip about $\frac{1}{4}$ in. to $\frac{3}{8}$ in. wide along the centre that has no hole breaking into it. To get the shape of the curved ends of the tongue, we draw the rear curve with the point of a pair of compasses on the leading edge of the rib that fits against the fuselage. The front curve is drawn with the compasses on the trailing edge of the same rib. When the box is put into the wing we must not forget the dihedral angle.

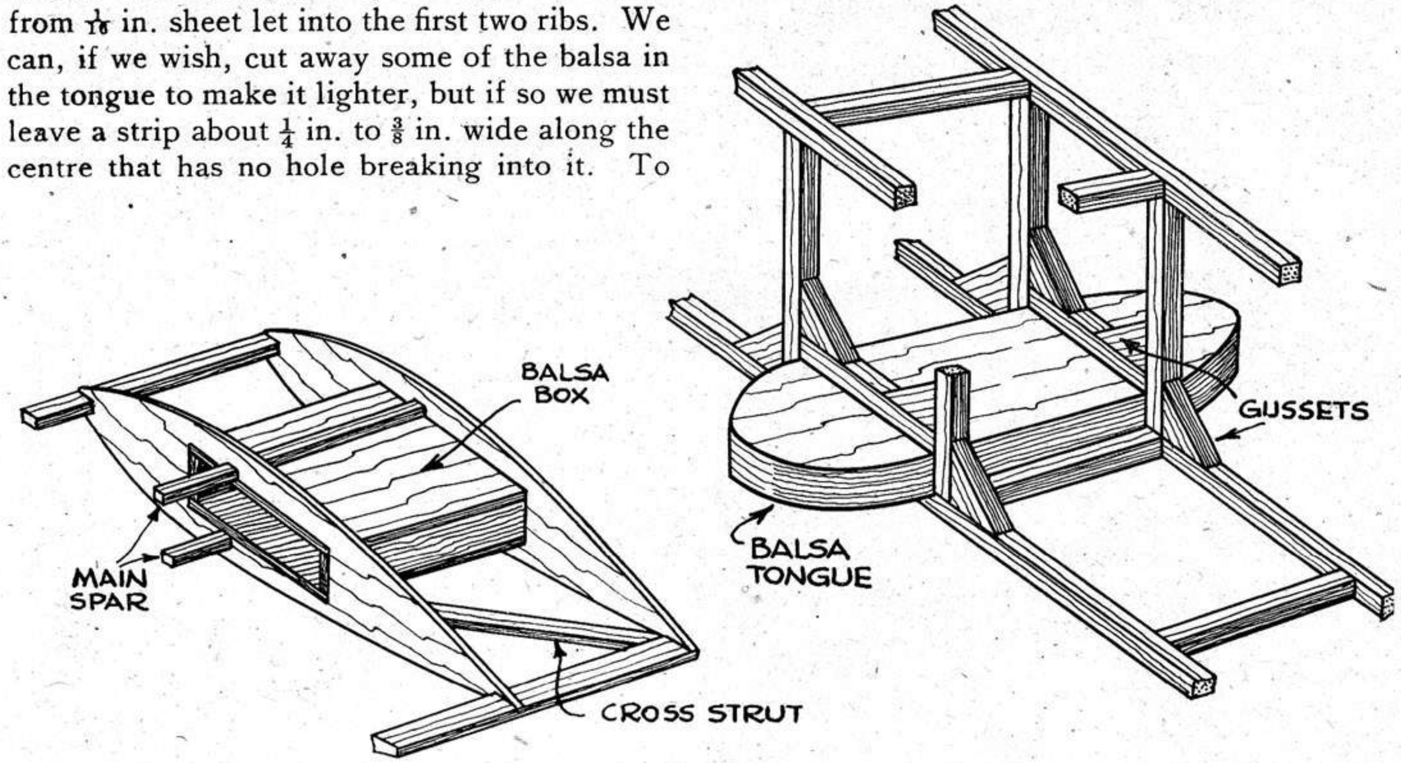

Fig. 38.

This tongue and box idea can also be used to make outboard wing panels detachable. These panels could be those outboard of the engine nacelles on a twin-engined machine, or outboard of wing struts.

Another idea is to use press studs or dress snaps as they are sometimes called. These can be sewn to the balsa, and when glued also are surprisingly strong. A better way, however, is to solder each part to the head of a small bolt and bolt it to the wing rib. This rib should be strengthened by putting a large thin ply washer under the nut.

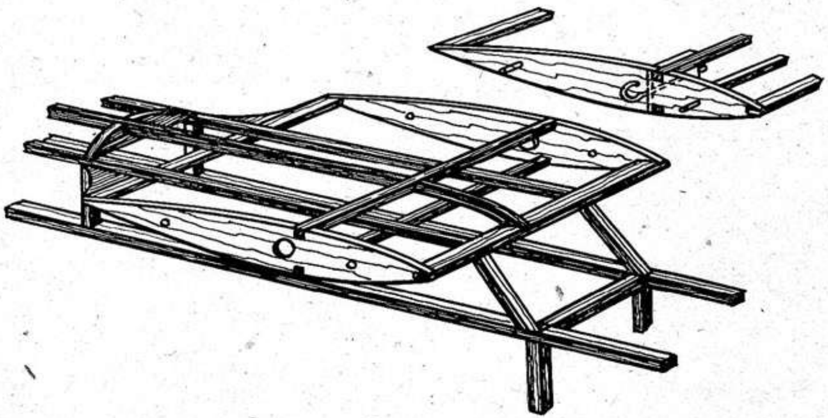

Fig. 39.

Where we have the whole of the wing detachable on strut-braced machines we really want some means of keeping the wing in place on the fuselage, and let the struts take the weight of the model. Fig. 39 shows how we can have small bamboo plugs on the wing panel to fit into holes in the centre section rib. It also shows the hole through the centre section through which a rubber band is passed to fit on the hooks on the wing. In use we put the band on one hook and pull it through the centre section and fit it on the other. The band should be short, so that it is tight with the wing in position. About the only way of

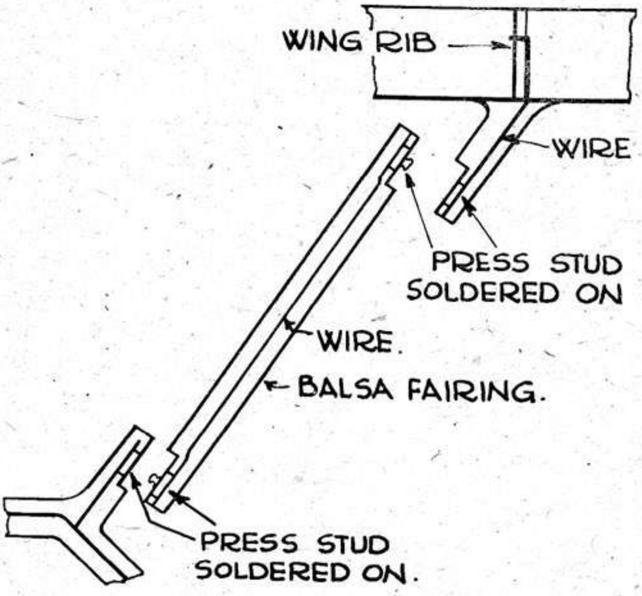

Fig. 40.

getting the band through is to use a long wire hook that will pass right the way through.

The wing struts are the biggest problem, but the following method has been used most satisfactorily on a model " Lysander." In fact no fault has been found with it. For this a piece of wire was soldered on to the undercarriage, and projected about $\frac{3}{4}$ in. in the direction of the strut attachment on the wing. At the top of this was soldered part of a small press stud. Another piece of wire was fixed to a wing rib, and projected towards the undercarriage, and had a press stud soldered at the bottom. The other halves of the press studs were then pushed on, with a spot of oil on the knob part. The next part of the job was rather tedious, but well worth the care taken. The fuselage was packed up level by putting books and slips of balsa under the tail, and slips of balsa under the wheels. The wing was supported on a pile of books at the tip, and attached to the fuselage at the centre. The dihedral and incidence were adjusted by means of little wedges of balsa. A length of wire was then

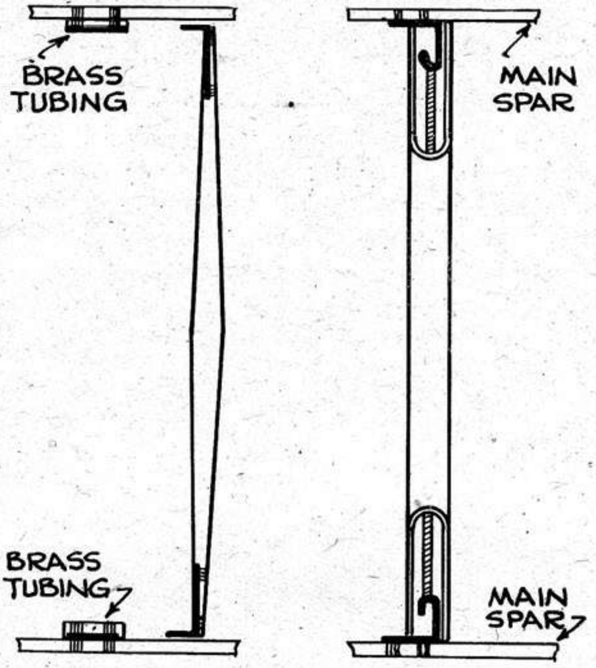

Fig. 41.

soldered to the outside parts of the press studs. The wires, which were about 22 s.w.g., were then faired (or streamlined) with balsa, leaving

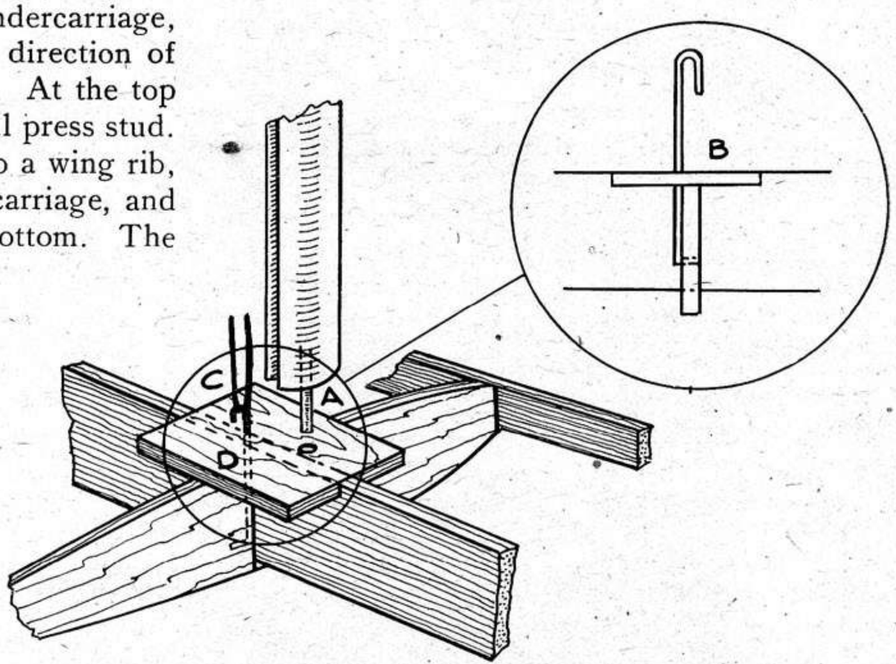

Fig. 42.

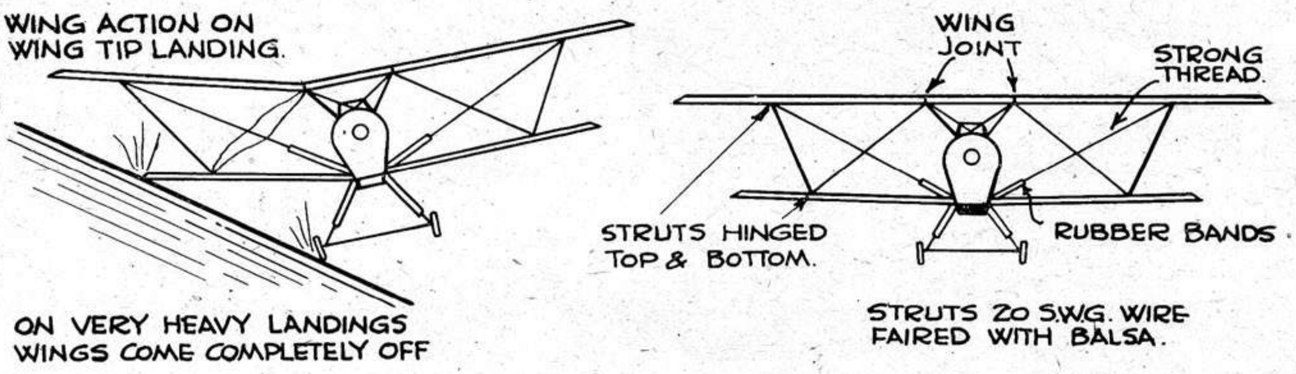

Fig. 43.

stepped ends, see Fig. **40**. Struts for biplanes can be fixed up in the same way.

Another way of making struts for biplanes is shown in Fig. **41**. For this we bind wire hooks of about **22** or **24** s.w.g. to the main spars and put on a rubber band enclosed in a paper tube. In the sketch the tubes have been cut away at the ends so that we can see the hooks. To make these paper tubes we need a former, that can be a piece of dowel, a pencil, a knitting needle, or if we want a streamlined strut we can make a former by sandpapering a piece of bamboo to shape. Round this former we put a piece of writing paper and then bind on strips of gummed paper tape as used for parcels. Writing paper or drawing paper can be used for the whole of the tube if we glue it well all over as it is wrapped round. Seccotine is very good for this job, as it can be spread all over with a wet finger. Damping the paper first also helps it to spread. If you use gummed tape, have a piece of sponge in a saucer of water for wetting it, or your tongue will get rather dry. As soon as the paper has been bound on to the former we must slip it off, because as it dries it shrinks, and if we allowed it to do that we should not be able to get it off without destroying the tube.

The other method shown makes use of a bamboo strut with a wire hook at each end that fits into a piece of tubing bound and glued to a rib or spar.

Fig. **42** shows another biplane strut fixing. The bamboo peg " A " could pass right through the balsa strut, the balsa being put on in halves. The slot for the rubber band could be covered with paper for most of its length, for neatness.

The wing fixing on Mr. Hastings's " Fury " is rather smart, and is shown in Figs. **43** and **44**.

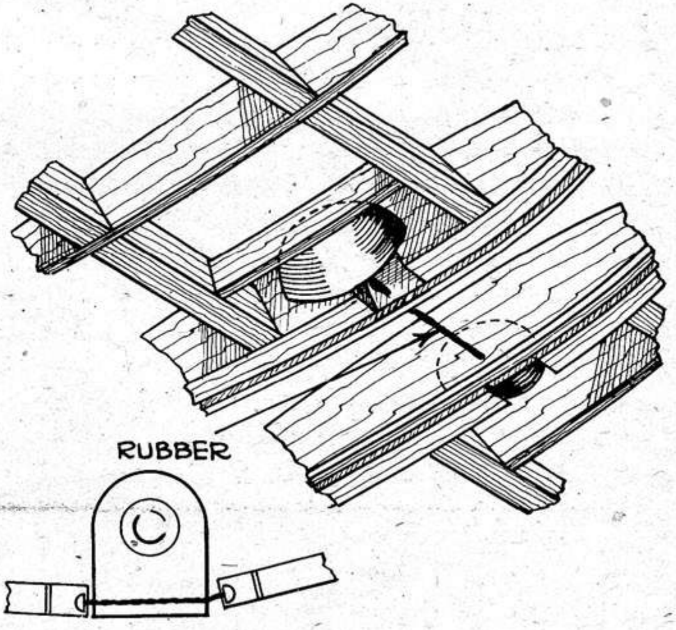

Fig. 44.

The rubber bands holding the thread " lifting wires " tight pass through the fuselage in square balsa tubes. Similar tubes are used in the centre section at the top. For the bottom wing fixing a strong rubber band is used with a hardwood sort of button on each end. This passes through the fuselage and pulls tight against the inside end ribs of the wing. These ribs are slotted to take the rubber.

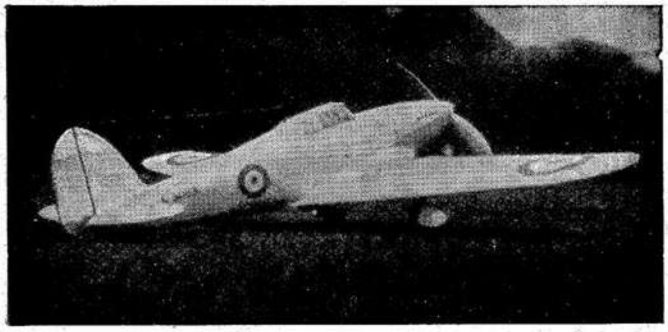

The Hawker "Hurricane" is very popular with builders of flying scale models. Here are three examples, all worthy of admiration for the skill exhibited in incorporating so much detailed work in small models.

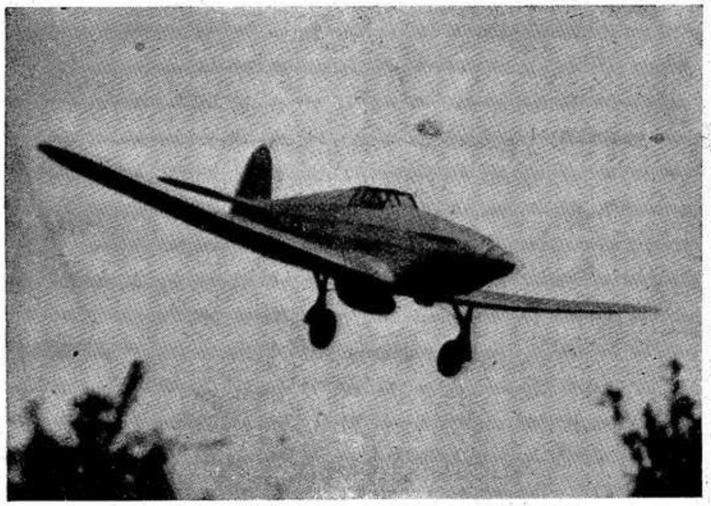

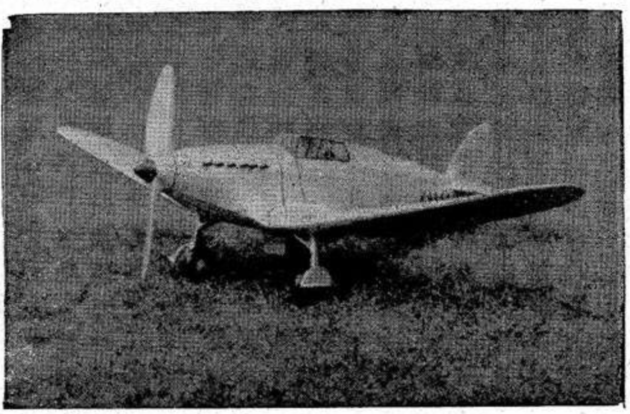

CHAPTER XV

TAIL UNITS

CONTROL SURFACES. VARIOUS ATTACHMENTS.

WE can build rudders and tail-planes in the same way as wings. The main difference is that the tail unit can be made rather lighter. We can, for instance, use $\frac{1}{8}$ in. × $\frac{1}{16}$ in. balsa for the leading and trailing edges, $\frac{1}{16}$ in. × $\frac{1}{16}$ in. balsa for the main spar, and $\frac{1}{32}$ in. sheet for the ribs. This will be strong enough for quite large models, and the ribs should be made to the section known as R.A.F. 30. They can have holes cut in them to make them lighter, and should be spaced about $1\frac{1}{2}$ in. apart. If the tail-plane is a small one, say, not more than 8 in. span, there is really no need for a main spar, but when we do use one it should be continuous if possible from tip to tip, and attached to formers or spacers put in the fuselage for the job. Formers should also be arranged for attaching the leading and trailing edges. The method of glueing the spars to the formers is shown in Fig. 45.

We can, if we like, make the tail-plane and fin (or rudder) detachable for ease of transport, or in some cases for access to the rear motor fixing. We can use a bamboo dowel, plugging into a paper tube, a piece of wire in aluminium tube or into balsa, which should have plenty of cement in and around, or we can use a rectangular bamboo plug and balsa box. Very satisfactory results have been obtained from a rectangular plug fitted at the main spar, letting it project into the rudder and tail-plane

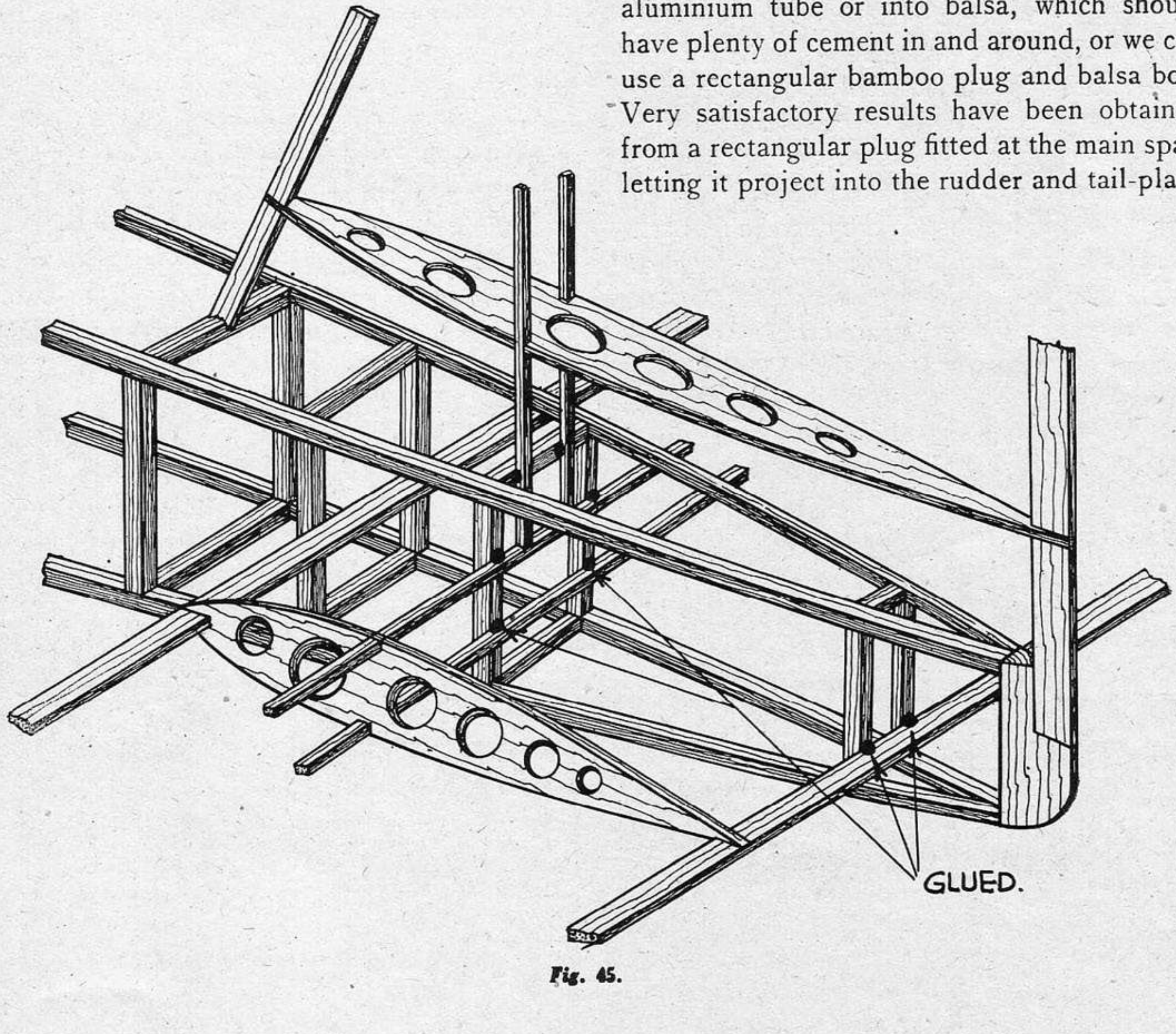

Fig. 45.

about $1\frac{1}{4}$ in., with a short plug poking through a hole in the first rib just ahead of the trailing edge (Fig. 46). The hole was strengthened with an extra thickness of balsa on the inside. This rear attachment serves to prevent the surfaces from altering their incidence. A certain amount of slackness developed, but was easily taken up by glueing a strip of tissue paper to the inside of the balsa box or hole. This was accomplished by putting a spot of glue on the paper, pushing it down the box and putting the tail-plane or rudder on to the plug and withdrawing it before the glue could set.

Another way of making the fin and tail-plane detachable is to have them fixed together and to the top of the fuselage, and have this top half of the fuselage detachable. If we look overleaf at the drawing of the Kestrel Trainer, we can just distinguish this feature. If we look carefully we can see two fuselage formers just in front of the fin; one is marked H and the other J. H is attached to the fuselage proper, and J is fixed to the detachable part. Just below the letter J we can see two longerons, one of which passes right down the fuselage to the sternpost, and the other is from former J to the fin post on the detachable part. There is a view just below the fuselage of locating strips, with an arrow pointing to the point where the longerons are broken away, to show the motor attachment. These locating strips can be balsa, about $\frac{1}{8}$ in. × $\frac{1}{16}$ in., and are glued to the inside of the detachable longerons to butt against the main longerons to prevent the top part from sliding about. This unit is held in place with rubber bands fastened to the fuselage and fitting on to hooks on the detachable part. We can see these hooks on the drawing; there is one on each side, fastened to former J, and marked rubber fixing; and another one on the fin post against the word "hinge."

Although it is best to have the tail surfaces fixed so that there is nothing to get out of trim, it is sometimes useful to have some sort of trimming device, which is usually a part of the surface made to hinge. The most popular method is to use small pieces of aluminium plate or soft iron wire let into the balsa to act as hinges. We can then move the hinge, but it will stay put. Another method is to make the elevator or rudder a tight fit between two ribs, and in the end put a short pin to act as a hinge. If it should not be tight enough, a paper washer will remedy matters. These hinges are shown in Fig. 46a.

In fixing the tail-plane and fin we must get them square and true with the fuselage. This is best done with some form of jig, which can be blocks of wood, books, tins or anything that

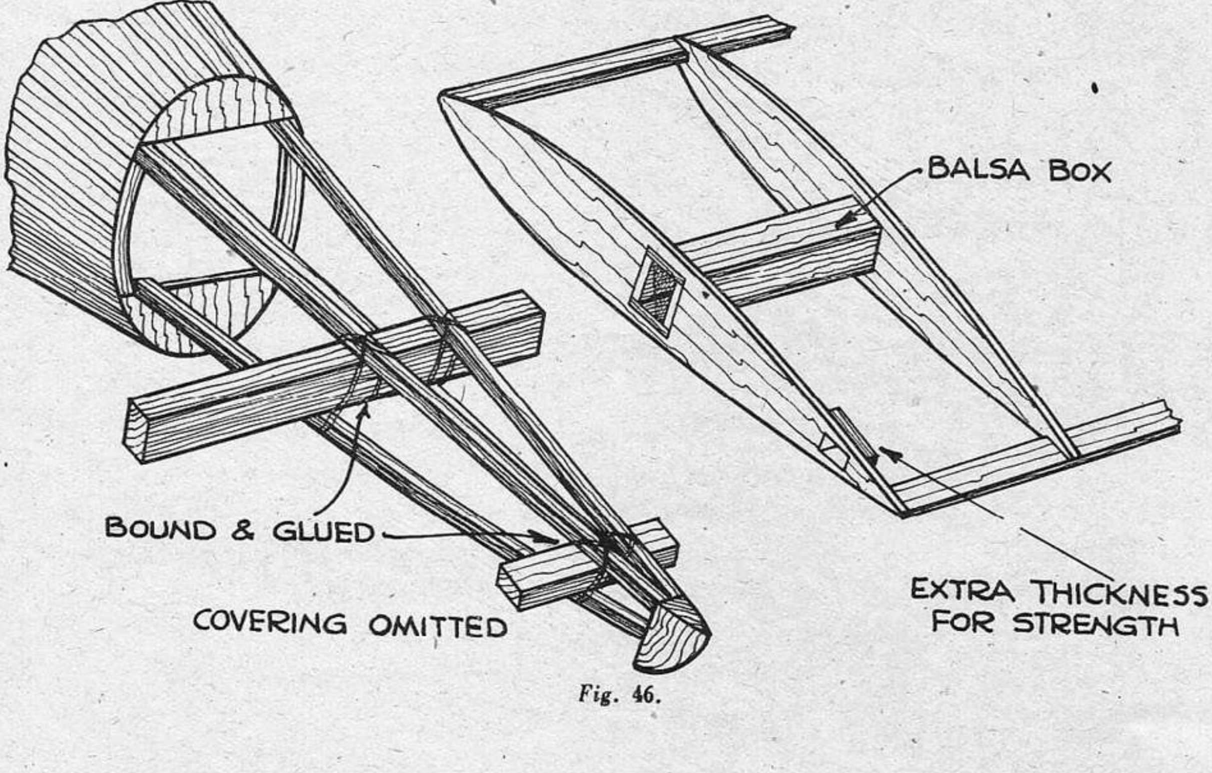

Fig. 46.

Here is Mr. Howard Boys with two tail-less models of his own design. They hold the British records in their class, one for hand-launched flight and the other R.O.G. Mr. Boys successfully treats his scale models very much like tail-less machines for stability, the idea being that a very small tail-plane is little better than none.

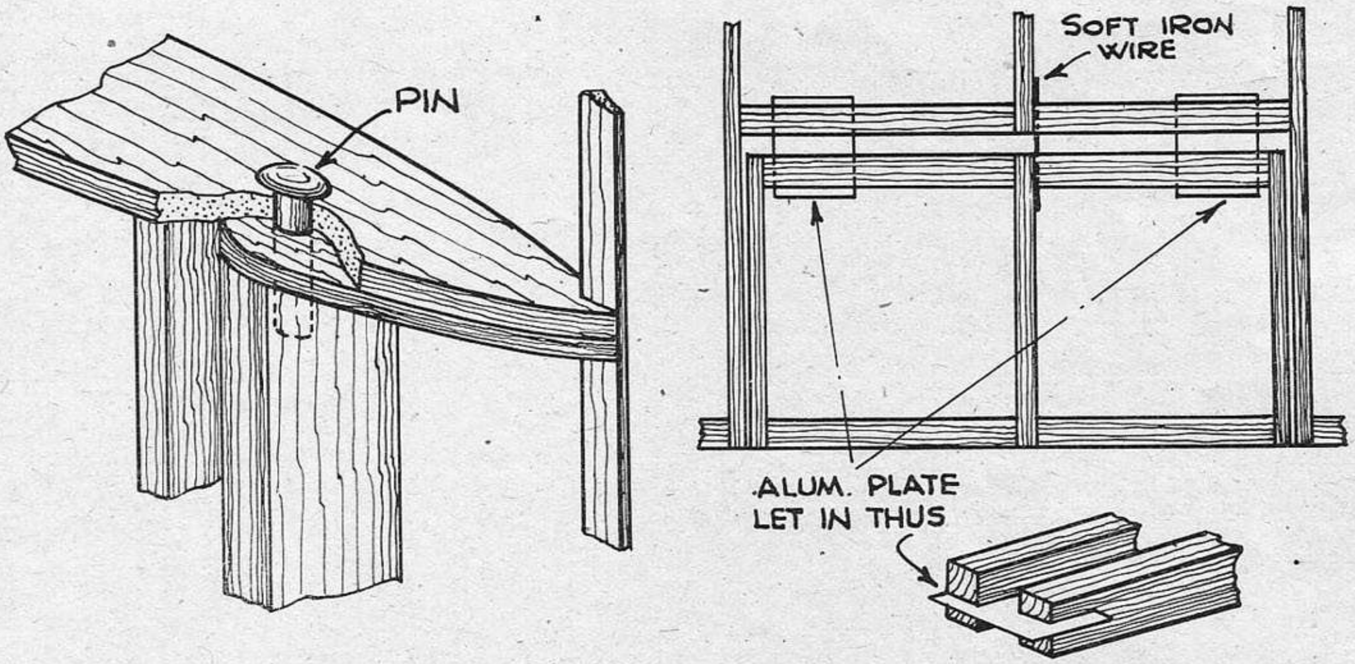

Fig. 46a.

will stand up on a flat table, and small wedges of balsa can be used to give a final adjustment. A piece of thread tied at the top, with weights on the ends, can be used to keep the fin upright. It is best to pack up the rear of the fuselage until the centre-line of the tail-plane is level. Take measurements carefully, and do not trust to what seems right to the eye. Measure from the table to get the tail-plane level, and to get the fuselage and fin upright a setsquare will be most useful. When all is set up true we can touch the parts to be glued with a spot of glue on the end of a piece of wire and spread it along the joints very carefully. A photograph showing a set-up as here described is on page 101.

THE REAL THING?

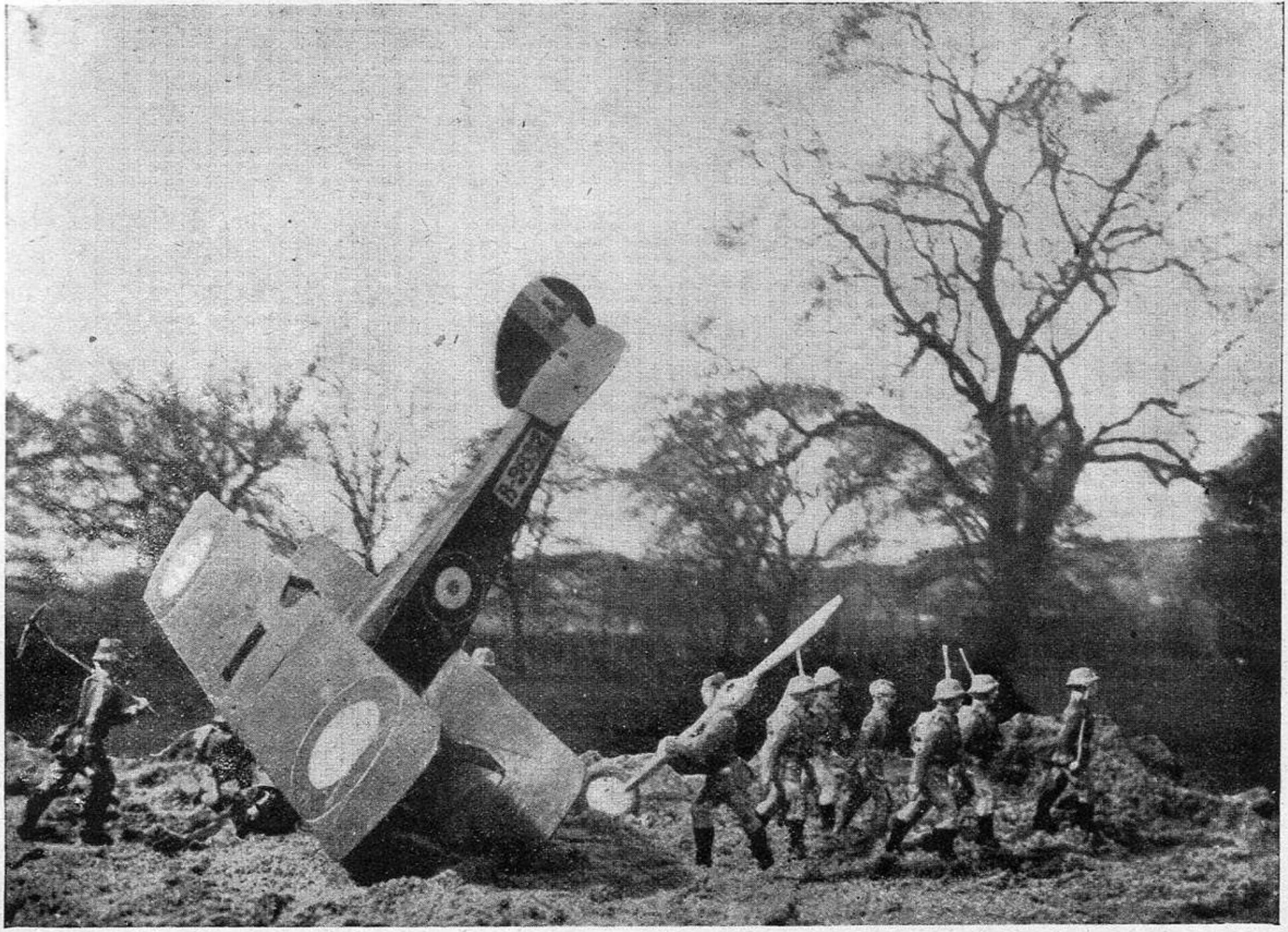

The photograph shows a Sopwith " Camel " which has crashed behind the German lines. The pilot is being marched off under escort, whilst the propeller and other parts are salvaged. An excellent example of " table-top " photography staged by Mr. J. H. P. Green, of Dundee, who took the photograph and also constructed the model.

CHAPTER XVI

CARVING AIRSCREWS

MAKING BLANKS. CUTTING FROM BLANKS. BALANCING.

CARVING airscrews is by no means as difficult as a good many aero-modellers seem to think. It is necessary to have patience and take care, but apart from that there is little in it.

We have already seen how to mark out a blank, and this is then cut out carefully to the outlines. For this job we can use a bow-saw, or, on small propellers, it can be done with a knife. We can, of course, buy propeller blanks, but these are usually made to shape to suit duration type models, which require a large diameter, and consequently large pitch, and they are therefore unlikely to be suitable. That does not mean they will not fly the model, but that the model will not fly at its best. To get the best will probably mean trying two or three different pitches, and to get the most suitable one we shall almost certainly have to carve it ourselves.

It will be most convenient if we can have a large wood block clamped to the table or bench, on which to work, as shown in Fig. 48, which also shows useful tools for the job. Now in Fig. 49 we see on the left a blank with two lines marked A, which we draw about $\frac{1}{16}$ in. from the corners. We want to be careful which corners we choose, as they make a difference to direction in which the propeller revolves. Using the corners shown, we get a propeller that revolves anti-clockwise when viewed from the front, and this is the way that is easiest to wind up. Across the blank, from one line to the other, we make a series of saw cuts, as shown in the second view, and carve away the shaded part. If you have no chisel, do not worry, a pocket-knife is quite good. In fact the writer rather likes a pocket-knife for the job, in spite of the fact that he has been told that pocket-knife carpenters never go to heaven, and at one time he was employed for six months as a woodworker! Well, having cut away the corner, we smooth it down with a rasp or sandpaper. We turn the block over now and mark the lines B. On the top face (or widest) the line should be about one-quarter the width of the block. This gives the triangular blade section seen in the end view. We make more saw cuts and cut away the shaded part again, and smooth off. This time we do

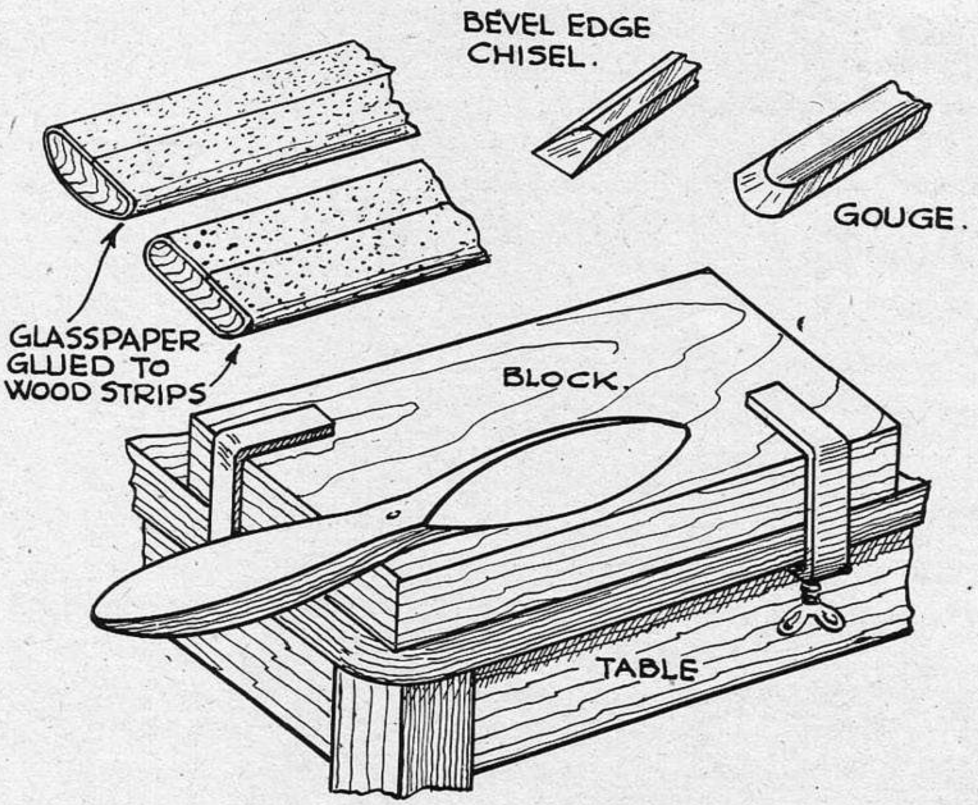

Fig. 48.

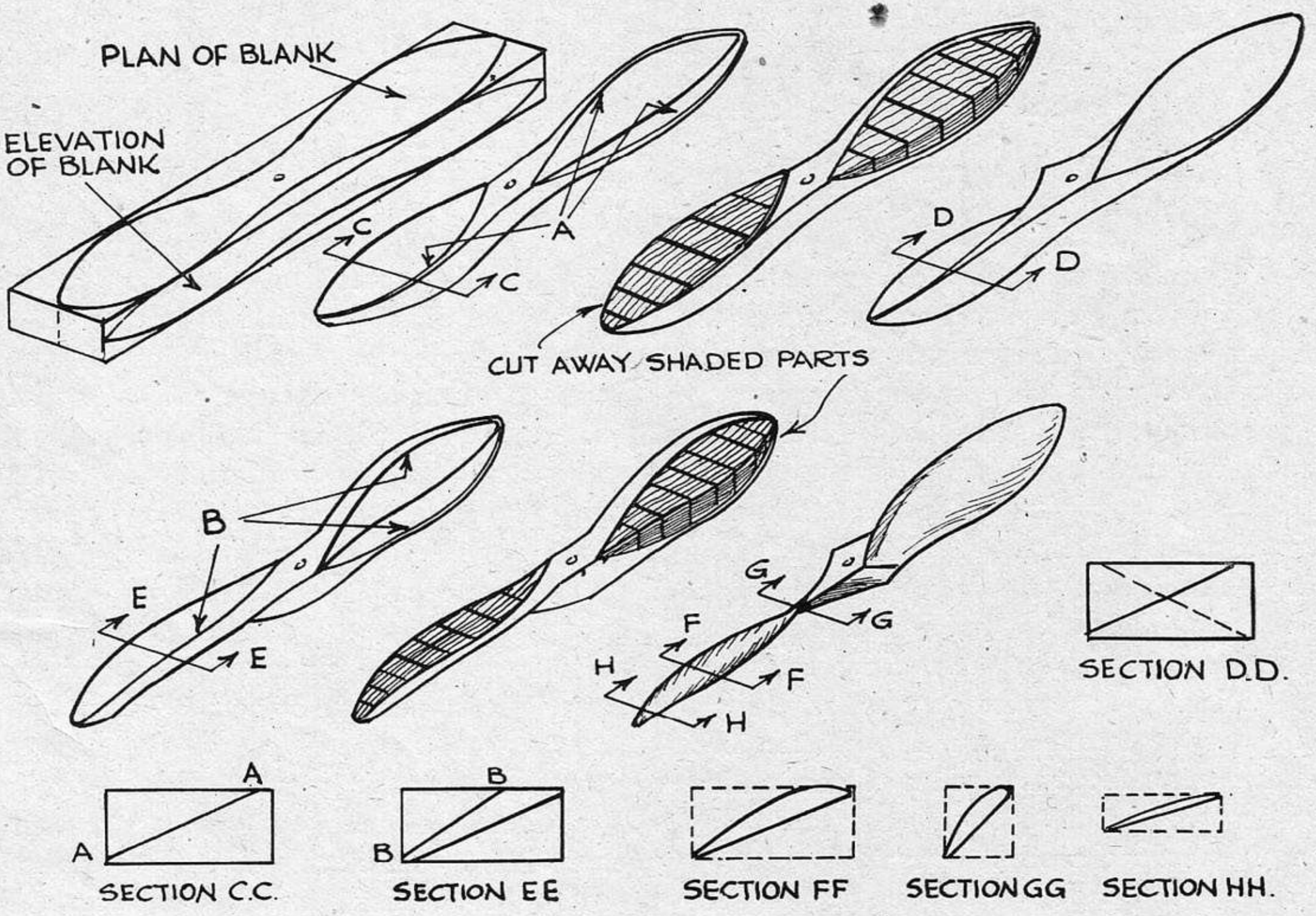

Fig. 49.

not make it flat across, but rounded, as seen in the end view, and also at AX in Fig. 50. We can, if we like, make the rear face hollow, as at BX, but it is doubtful if there is any advantage in this. Note the similarity to wing sections. In fact a wing section here is very good if we can manage it. The next job is to balance the airscrew, which should be done to the best of our ability.

A good way to get the balance right is to drive a strong needle into our block of wood, to use it as a spindle, with the propeller free to revolve on it. Now if we mark the blades A and B and revolve the airscrew slowly by hand, we can note which blade stops at the bottom. This blade, then, is the heavier, and must be lightened by sanding as near the tip as possible. Try for balance again and keep on till both blades are the same weight, and come to rest horizontally. The airscrew may not be properly balanced even now, so let's see what we can do about it. Rub off the old marks A and B and put on new marks AA and BB. See Fig. 50 again, and note that AA is for one whole side and BB for the other. If side AA always comes to the bottom we shall know it is the heavier, and we must sand all along that side from tip to tip. If side BB always comes to the bottom we shall have to sand that all along. We keep on like this until, when the airscrew is perfectly balanced, it will come to rest in any position. We can finish the airscrew by lightly sanding all over with very fine glasspaper and polishing or painting as desired.

On a lot of aircraft nowadays we find three-bladed airscrews are fitted, so we may wish to make one of these. The best way is to make each blade separately, and all as nearly alike as possible, and mount them in a boss or hub. Each blade should be marked out and carved as before, but the inside end should be made rounded. For the hub we can use two discs of wood about $\frac{1}{4}$ in. thick, grooved to take the blades. These grooves can be cut square at first, and then rounded with a piece of glass-paper wrapped round a nail or thin pencil. We want to be able to turn the blades to get the pitch right, but they must not be loose in the holes. To get them properly in place, with the angles correct, we shall find a chock handy. This can be cut from $\frac{1}{16}$ in. or $\frac{1}{8}$ in. sheet balsa and should give the angle at about two-thirds from boss to tip. We then lightly glue it to a board and mount the airscrew on a pin, as shown in Fig. 51. We can set the angle of

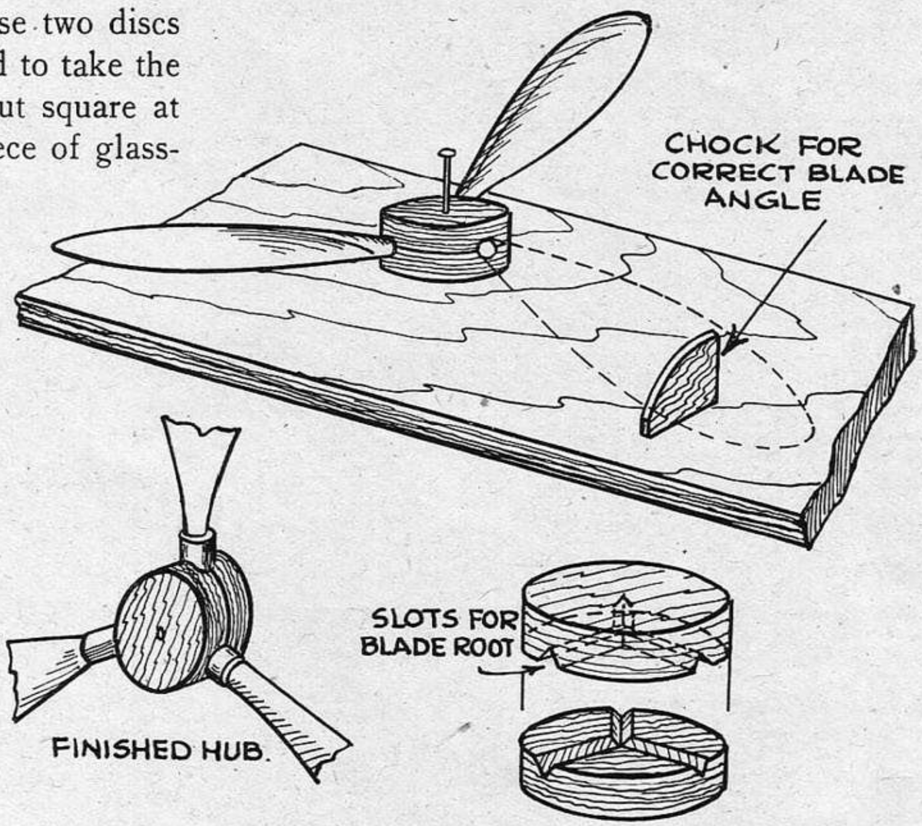

Fig. 51.

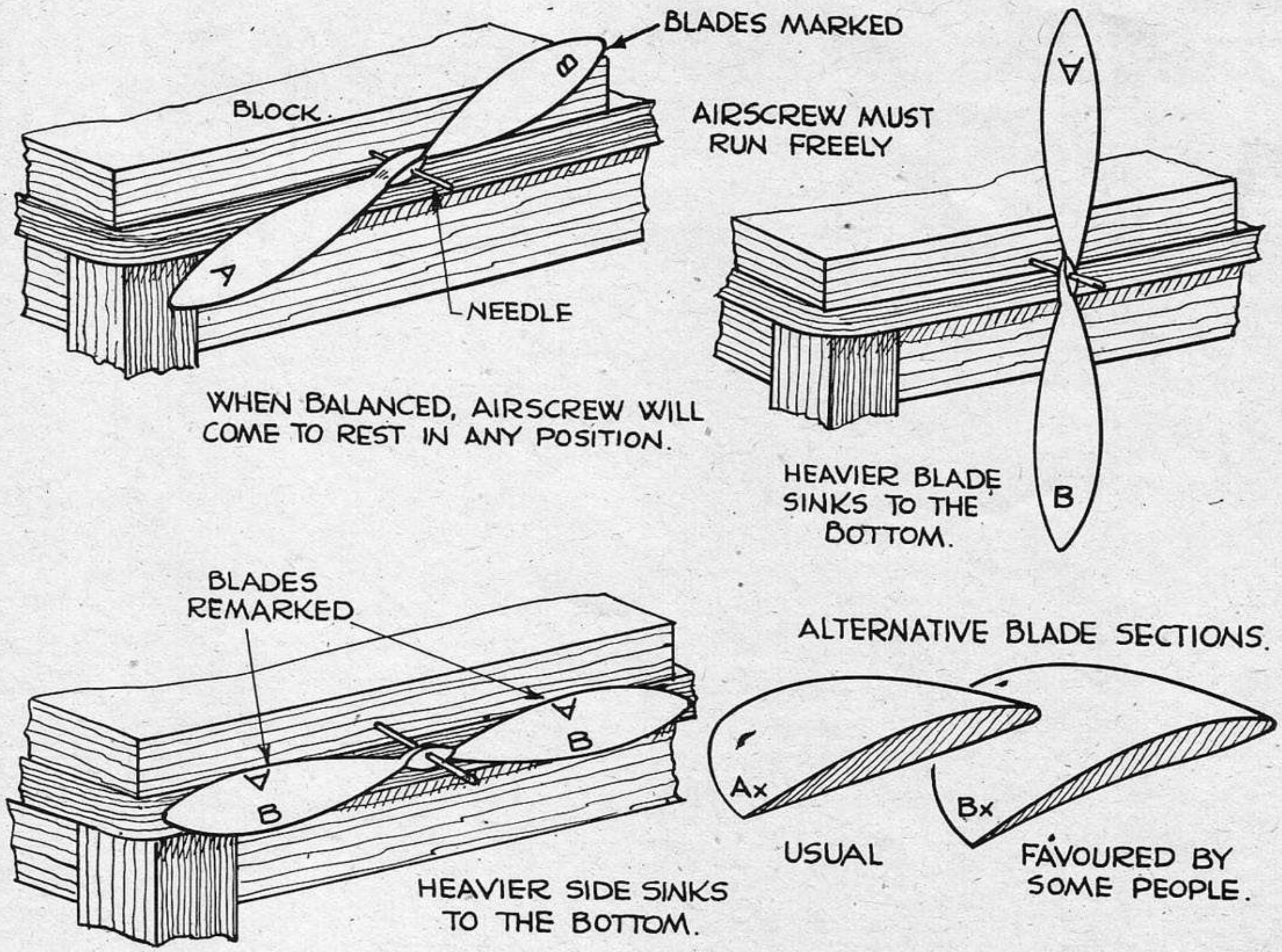

Fig. 50.

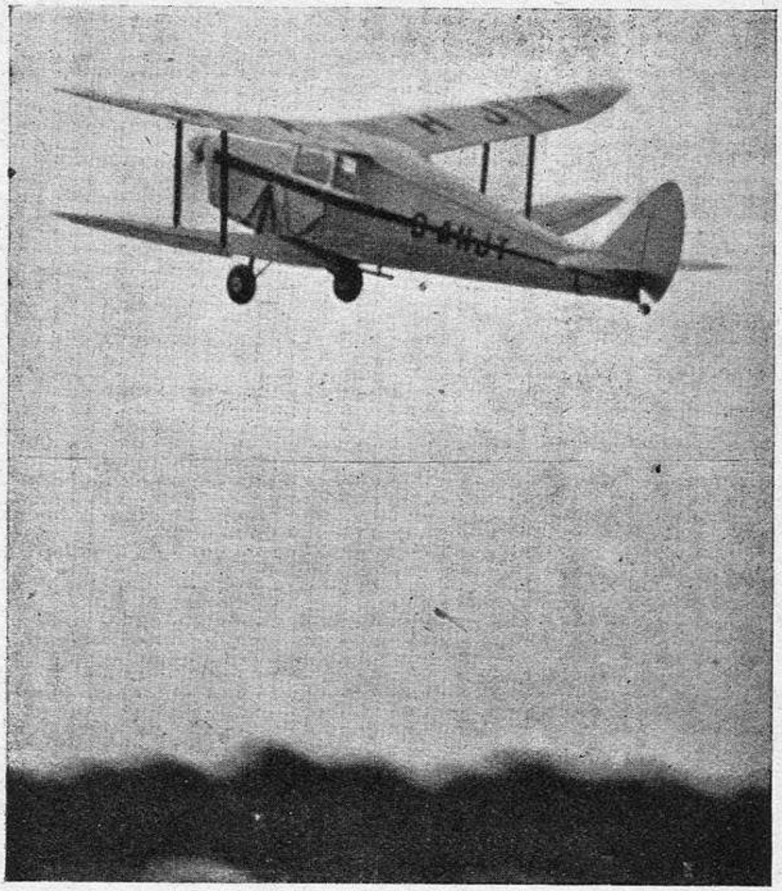

This photo shows another of Mr. Towner's models in flight—a De Havilland "Hornet Moth."

each blade by revolving the airscrew so that each blade in turn is brought on to the chock. For glueing this the slow drying type is, of course, the stuff to use.

Another method by which we can make a three-bladed airscrew would be to leave the hub end of each blade rectangular. For two of the blades we could use a two-blader cut across the middle. These blades could then be fixed between two discs of $\frac{1}{16}$ in. sheet balsa or ply, in which case the blade angle would be right straight off. The spaces between the blades should be filled with sectors of balsa and the boss carved to the desired shape. The blades should, of course, be spaced accurately. We can do this easily by drawing a circle the same diameter as the airscrew, and, using the radius, divide the circle into six equal parts. Three of these points will now be the position of the blade tips.

Chapter XVII

NOSE-PIECES

GEARBOXES. SIMPLE NOSES. FREE-WHEELS.

One of the most easily constructed types of gearbox is that shown in the drawing of Mr. Towner's Miles Kestrel Trainer M9. This drawing is rather small, but a similar type is shown in Fig. 52. We have a very fine photograph and sketches of a first-class gearbox designed and built by Mr. C. J. Burchell. It is the sort that would be very suitable for a model with " Gipsy " engine. Four gears are shown, but we can make this type with two or more.

The back plate is the most difficult, and most important, so let us do that first. Fig. 53 shows the shape, and it is cut from $\frac{3}{16}$ in. ply. Lay a rule on the ply and mark a line along the centre with a strong pin, needle or compass point. Near the top we drill a hole $\frac{1}{16}$ in. dia. for the spindle. We shall be using **16** s.w.g. wire for the shafts, as this is the size that suits the holes in the gear wheels. To get the position of the next hole, we put the first gear wheel in place, and push the second up to it so that the hole is over the centre line and the teeth are in mesh. Through the hole in the second gear we drill a $\frac{1}{16}$ in. hole through the ply.

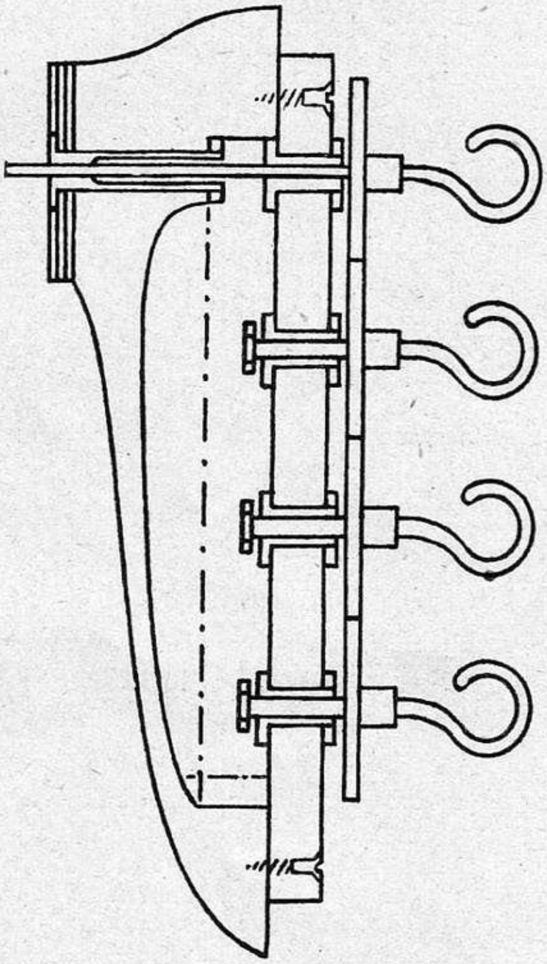

Fig. 52.

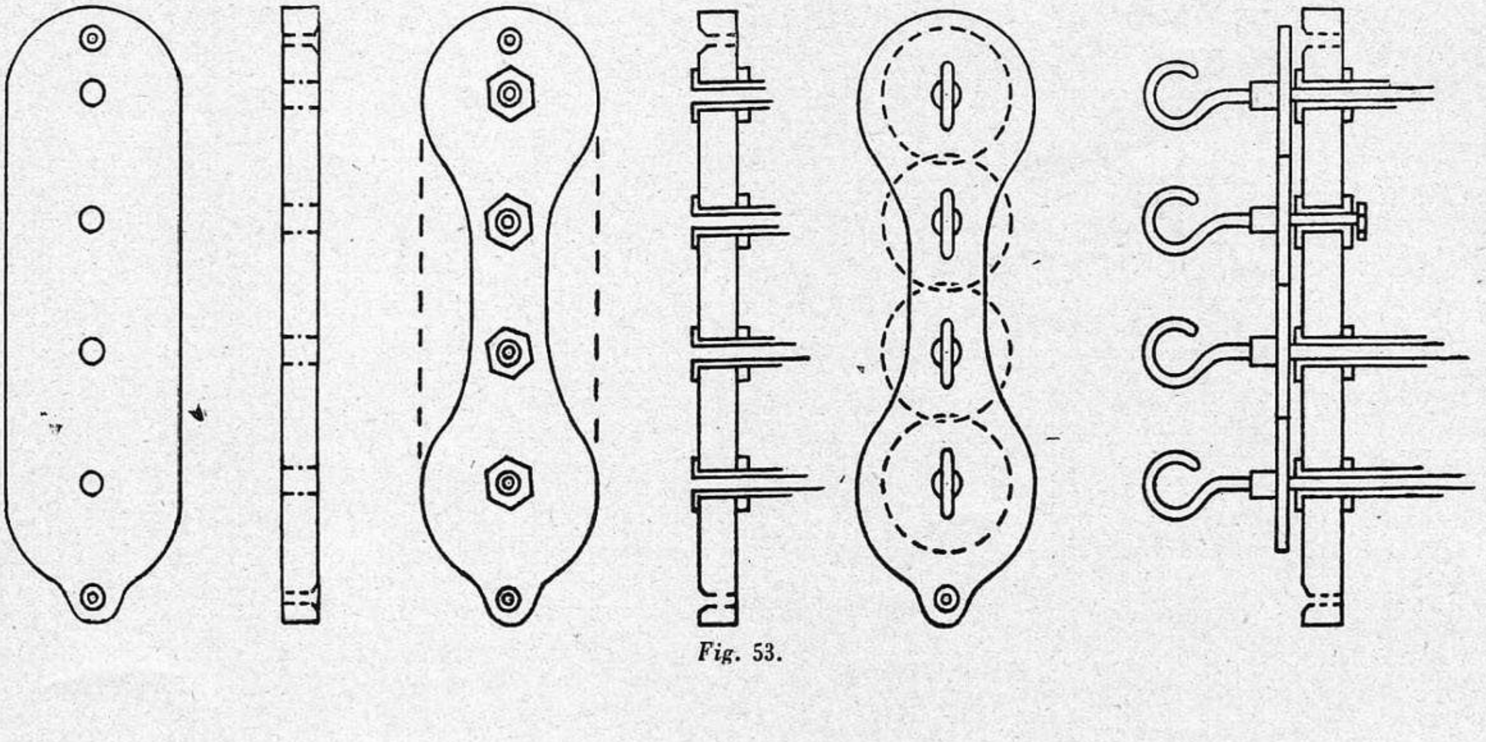

Fig. 53.

Holes for more gears are drilled in the same way. We also drill holes for the wood screws for fixing the back plate to the front or nose-block. The holes for the spindles are now drilled out large enough to take screwed bushes, which are pushed through and fixed with nuts. The bushes can now be cut short and glue put round the nuts to stop them unscrewing. Before going any further we had better see if the holes are in the right place. Put the gears on the spindles with the spindles through the bushes, and see if the gears will turn fairly easily. It is best for them to be a little bit tight, and if they are very tight, or if there is much play between the teeth, it is advisable to start again with a new piece of ply. If they are all right—as they will be if we have worked carefully—we can carry on. The gear wheels are soldered to the spindles, and the spindles put through the bushes. On the ends of the spindles we can solder cup washers or small brass nuts, except on the shaft that takes the propeller. This is left free for the time being to allow us to fix the top wood screw. The next thing to receive our attention is the nose-block, which can be made of some hard, or medium hard, wood like walnut, bass or spruce. Fig. 55 shows how we start with a rectangular block and cut away the outside and hollow out the back. We can best find the position for the hole for the propeller shaft by putting the back plate on first and drilling through the top bush with a $\frac{1}{16}$ in. drill. At the same time we can try the gears to see that the shafts are not catching on the inside of the nose-block. Now we take off the back plate and drill out the nose-block, and fit another bush. You will notice that a step has been left in the hollow part for the nut, fixing the bush, and the bush has been drilled slightly larger nearly all through to decrease friction on the shaft. Also we glue a disc of ply to the front to come flush with the face of the bush. A spot of glue on the nut will prevent it unscrewing. Now we can glue and screw the back plate to the nose-block and put in the top shaft. On this we thread a cup washer and solder on a driving disc, wire loop, or whatever we intend using to drive the propeller. On page 24 is a photograph of the finished gearbox.

To fit this gearbox to the nose of the fuselage, we can use a piece of $\frac{1}{16}$ in. or $\frac{1}{8}$ in. thick ply cut to the outline of the nose, with a hole in it to fit the back plate. This is glued on to the nose of the fuselage.

The simpler type of gearbox is made in much the same way as the one just described, but instead of a back plate of $\frac{3}{16}$ in. ply fixed to a nose-block we use two pieces of $\frac{1}{8}$ in. ply, glued and held together by the bushes. The front piece is the same size and shape as the front of the fuselage, and the back piece is a bit smaller, to fit in a piece of ply glued to the front of the fuselage. We drill the two pieces of ply as before, and put the bushes in with the nuts on the back, and leave them long.

These bushes can be held in place quite well by covering the nuts and faces of the ply with Durofix. The gears are put on the shafts or spindles as before.

Another method of building gearboxes is shown in Fig. 56. It is the type that never seems to wear out or go wrong, and the writer has had a number of years' service from one box so constructed. The two plates are of brass about 20 or 22 s.w.g., and we drill them with $\frac{1}{16}$ in. holes to suit the gears. We mark the positions in the same way as we did for the first type, and when drilled $\frac{1}{16}$ in. in the right place we open out the holes to $\frac{1}{8}$ in. Into the two plates we solder two short lengths of $\frac{1}{8}$ in. outside diameter brass tube of a fairly thick gauge. We can usually get this more easily from ironmongers or model engineer shops than from model aeroplane shops nowadays. The tubes then are soldered into the plates, and should project about $\frac{1}{32}$ in. at each end. The smaller plate is to keep the tubes the correct distance apart near the gears, and so need not be very big. About $\frac{1}{4}$ in. wide and about $\frac{1}{2}$ in. longer than the distance between the shafts is all right. We can either use ready-made shafts or make them from 16 s.w.g. steel wire, and solder the gears on. We drill the tubes with a $\frac{1}{16}$ in. drill and see that the shafts run freely. The shafts are put in place and cup washers soldered on to leave just a little end play, but must be adjusted so that the gear wheels line up with each other. One shaft is cut short and the other left long for the propeller.

We might mention here a method put forward by Mr. S. E. Capps for getting the spindle holes in the right place without a lot of bother and experiment. We put the gearbox back-plate on a smooth, hardwood block, and lay the gears on top. Where the teeth mesh we put two or three thicknesses of Jap tissue paper, and hold the gears in place with pins driven into the wood. Now we melt sealing wax all round the gears and the plate to hold everything nicely in place while we drill the holes. We must use a sharp drill that just fits the holes in the gears, and drill slowly and carefully, so that we do not make the plate hot, or it will soften the wax and allow the gears to move. See Fig. 57.

Here is a tip. When soldering on cup washers, put a small piece of paper with a spot of oil on it on the shaft first. It prevents the solder sticking the shaft to the brass plate.

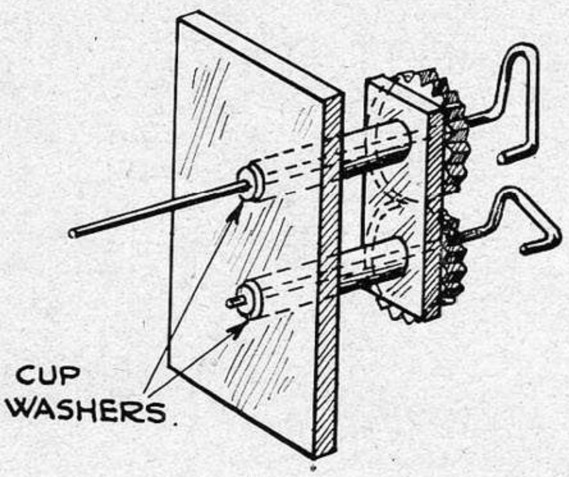

Fig. 56.

Turning from the sublime to the ridiculous as it were, Fig. 58 illustrates about the simplest thing in nose-blocks. To make it simpler we can leave out the spring and the screw. We use two pieces of $\frac{1}{8}$ in. ply, one the size of the fuselage nose and the other to fit just inside the nose. They are glued together and held with a screwed bush and nut. For the propeller shaft we can use 16 s.w.g. wire, bent to form a motor hook at one end, threaded through the bush, a cup washer put on, and the propeller, and the shaft bent over at the end, poked into a small hole in the propeller. The shape of the hook shown is to suit a bobbin, the use of which we shall learn about when dealing with rubber motors. The spring and screw are there to stop the propeller from revolving when the power has run out, and at the same time to keep the rubber from moving

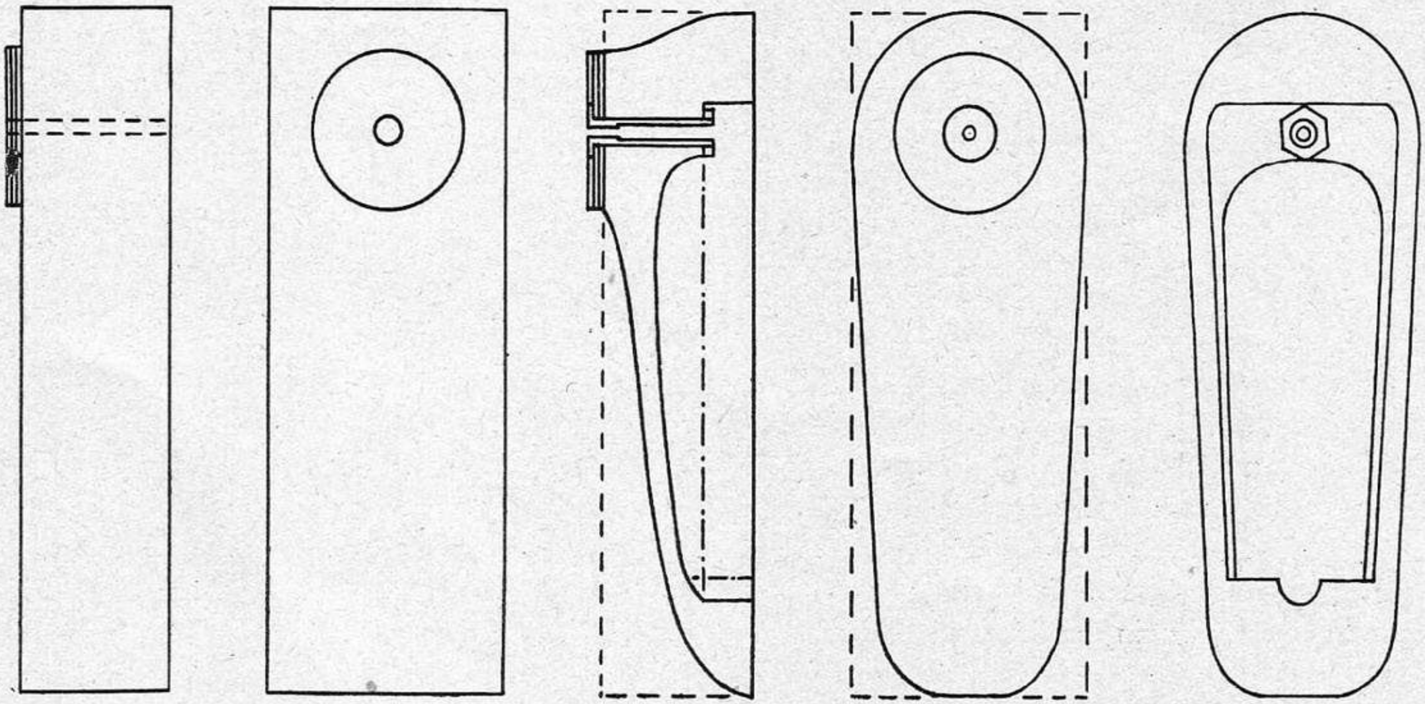

Fig. 55.

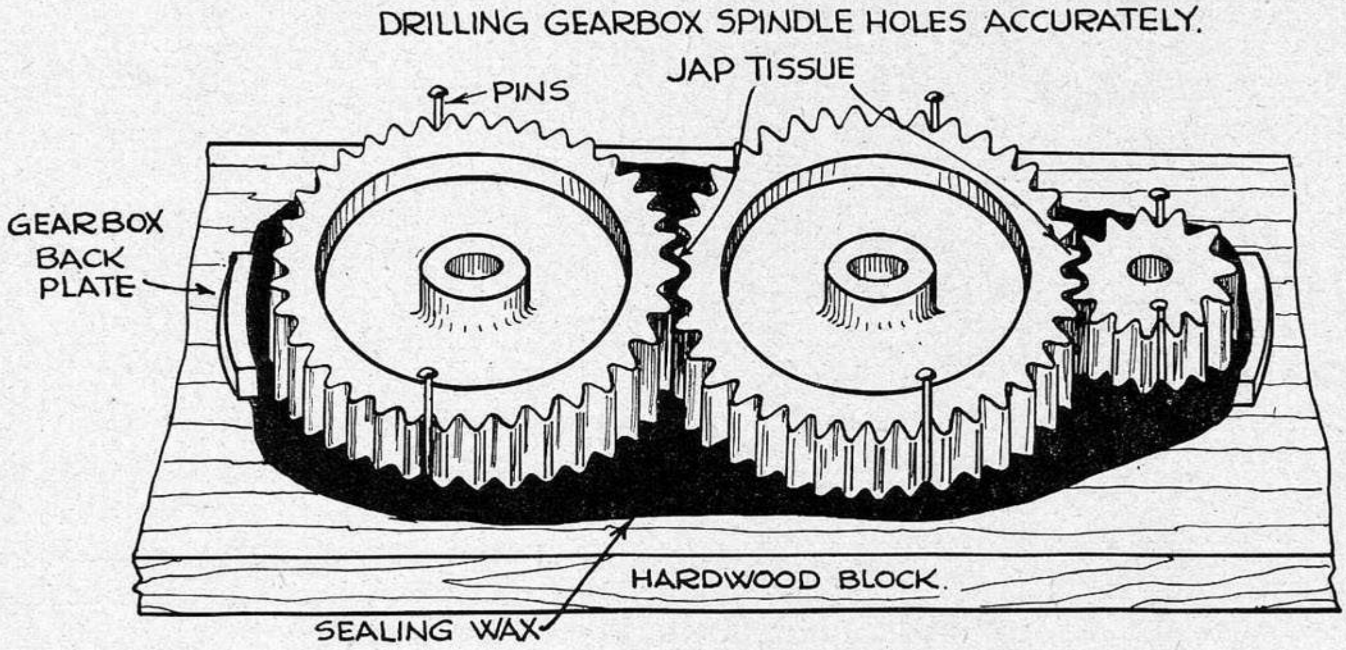

Fig. 57.

about in the fuselage after it has unwound, causing the centre of gravity to alter its position. We put the screw in such a position that when the hook hits it the propeller will be horizontal, to prevent risk of damage when the model lands. We do not want the spring very strong, about 26 or 28 s.w.g. steel wire will do nicely. A suitable piece can be taken from a worn-out cable from a bicycle or motor-cycle brake. The spring is made by bending the wire round a propeller shaft. We grip the shaft and the end of the wire in a pair of pliers, and wind the wire on in a helix (spiral), leaving a gap of about $\frac{1}{16}$ in. between each coil. We must hold the pliers very tightly and keep the wire just tight all the time. When we have about four complete coils, we push them all up together, keeping them tight, and then let go. This helps to even up the gaps between the coils. The spring is finished by cutting off the odd ends of wire and closing the ends of the spring up against the next coil. The screw has to be adjusted to suit the spring, so that when the motor is wound up enough to take up the slack in the fuselage the screw still catches the motor hook; but when it is wound up a little more the pull of the rubber compresses the spring and allows the shaft to revolve.

Now let us consider free-wheel devices. Let us first note the effects on the model. Firstly, about the only time we see a full-size machine land with the airscrew stopped is when it is done at a display to show that an aeroplane can be landed safely if the engine fails, so for looks we must use a free-wheel to let the propeller revolve after the power has run out. Against this there is much less risk of damaging the propeller in a bad landing if we arrange for it to stop horizontally when the power runs out. From a performance point of view things are interesting. When an aeroplane is gliding, the propeller acts as a brake to a more or less extent. If the pitch is equal or greater than the diameter, the braking effect will almost certainly be greater with it stopped than free-wheeling, or, as it is sometimes termed, " windmilling." If the pitch is about three-quarters

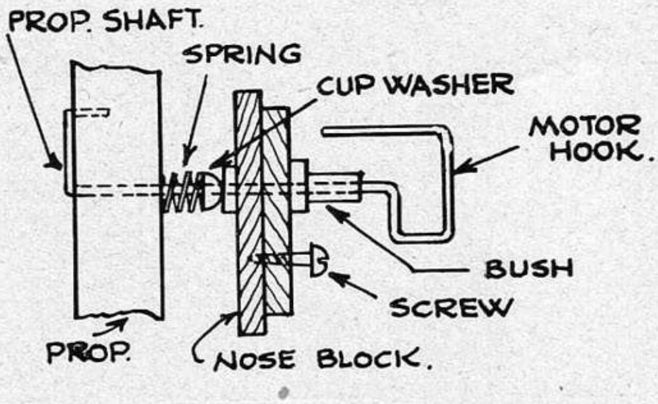

Fig. 58.

or less than the diameter the braking effect will be less with it stopped than windmilling.

Well, then, what happens when we put the brake on an aeroplane? The first thing is that it slows up, and in doing so loses some of its "lift." This means that if the machine is gliding it will come down more steeply, and although its speed is less it will reach the ground sooner. To see this more clearly, and to explain another point, let us draw a picture in our minds. Imagine a wall with two ladders leaning against it, with the top of each level with the top of the wall. One ladder has twenty rungs and the other has thirty. The bottom of the short ladder will be nearer the wall than the bottom of the long one. Suppose we walk down the short ladder in ten seconds, then our speed is two rungs per second, and we represent the aeroplane with the brake on. Now if we walk down the other ladder a bit faster, say two-and-a-quarter rungs per second, in ten seconds, we shall have got down twenty-five rungs, so we still have five rungs to go to reach the bottom. Although we have travelled faster down the long ladder, it has taken us longer to get to the ground; it works out at just over twelve seconds.

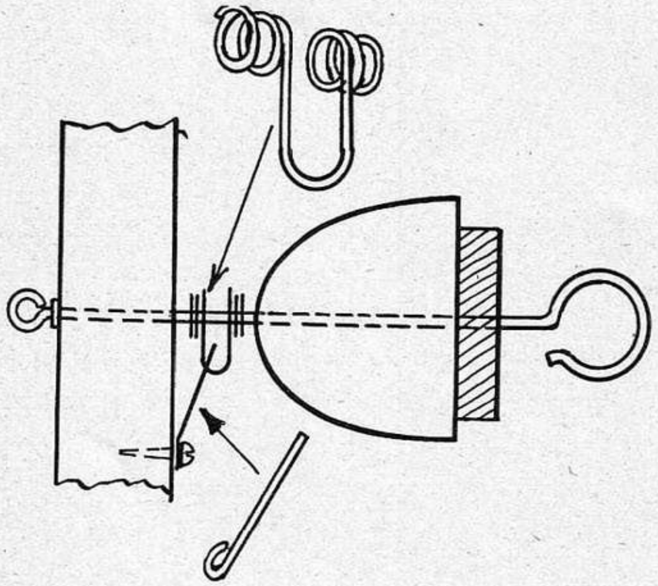
Fig. 59.

From this we can decide whether or not we want the propeller to revolve after the power has run out, and, as for some purposes it is an advantage to have a free-wheeling airscrew, we will describe two ways of making them.

The simplest way is shown in Fig. 59. Firstly we make a loop of wire about 28 or 30 gauge. We wind the wire on the propeller shaft for about three turns in the form of a spring, then make the loop and another two or three turns. You can see this more clearly in the sketch. We solder this on to the propeller shaft so that a projection on the propeller pushing against the top of the loop tends to wind up the wire and not unwind it. From a piece of wire about 20 or 22 gauge we make a pin to go through this loop. This pin has an eye-shaped end, made by bending the wire round a nail. It is held on to the propeller by a long, thin nail or screw, and must be free to swing round. It is fastened to the propeller so that the free end will go through the loop and just catch on the shaft.

Another type of free-wheel which is very neat is shown in Fig. 60. Here D represents the propeller shaft and B is a catch made from a coil of wire of about three or four turns soldered on. A is a pawl that we can make from a piece of sheet brass about 16 or 18 gauge. We drill a hole in it to take a wood screw about

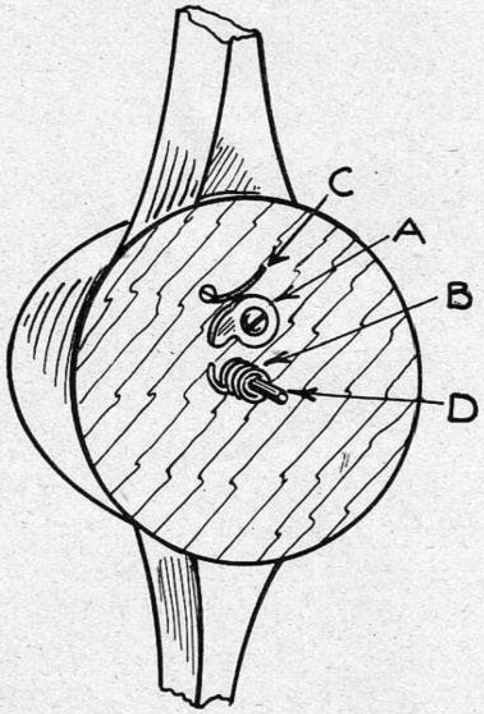

Fig. 60.

THE MONOCOUPE

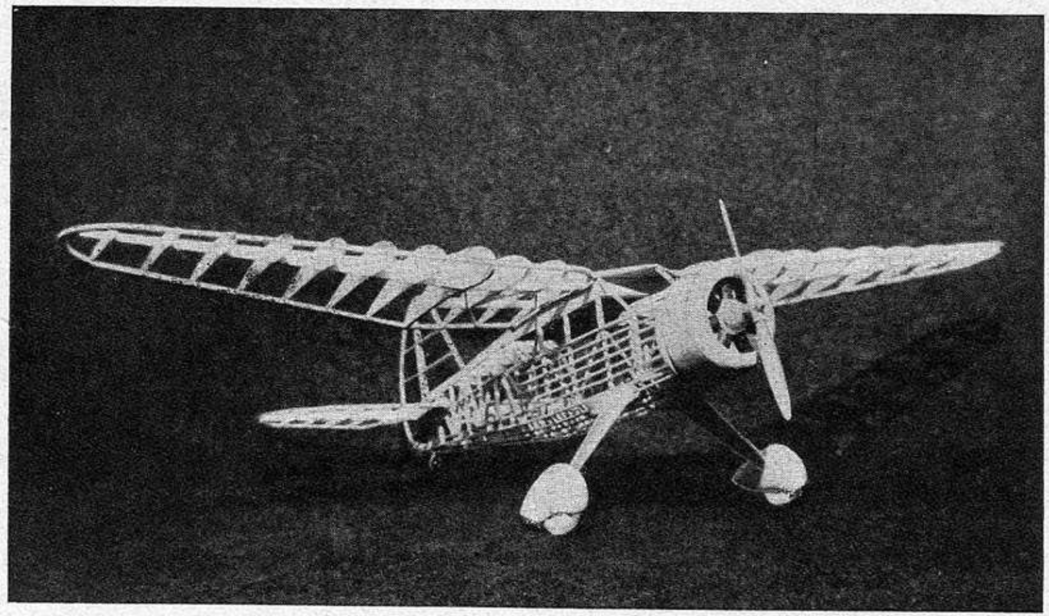

This 40 in. span of the Monocoupe, built by Mr. Earry, is yet another example of the beautiful workmanship displayed by aero-modellers. The model has moveable controls, and there are over 100 parts in the scale reproduction of the five-cylinder engine!

No. 2, then cut the outside with tin-snips and file to the shape shown. C is a small piece of spring wire about 30 gauge (a strand from a bicycle brake cable). One end is soldered to a wood screw fixed in the propeller boss. It should be adjusted so that it only just pushes the pawl into engagement with the catch.

When making gearboxes and nose-blocks we want to keep the overall size as small as possible, so that in the event of a bump on the propeller the nose-block pulls out easily, lessening the risk of damage.

CHAPTER XVIII

MOTORS AND FIXINGS

JOINING RUBBER. SELF TENSIONING. LUBRICATION. MOTOR STICKS. ADJUSTABLE FIXINGS. WINDINGS. WINDERS AND COUNTERS.

WE have already considered the use of the rubber motor, and we know that it is in one or more skeins, but we want to know now how to make up the skeins. We shall have to experiment to find out how much rubber is needed for a particular model, in the manner described for trimming the model for flight.

However, having decided on a certain quantity to try, we join the two ends together. There seems to be two methods of joining, both used satisfactorily by the writers. One is to tie a reef knot and bind the ends.

The other method is to lap the two ends of the rubber together with about half an inch overlap, and then bind them together, using thread or " Sylko," the rubber being stretched during the binding.

To assist us in this process, a gadget devised by Mr. R. Colman is shown in Fig. **61**.

A start is made with a base $5\frac{1}{2}$ in. × **3** in. of medium hard wood. In this are cut two rectangular holes $1\frac{1}{16}$ in. × $\frac{17}{32}$ in., these being $\frac{1}{2}$ in. apart and with their longer sides parallel.

Four pegs of $\frac{1}{2}$ in. square hard wood, each **2** in. long, are now cut and paired off—A, B, C and D. One inch from the top of each peg drill a hole—a $\frac{5}{32}$ in. in A and C, and a $\frac{7}{32}$ in. in B and D. Through A and C insert $\frac{3}{16}$ in. diameter bolts $1\frac{1}{2}$ in. long (these being purchased with wing nuts to fit), which are, intentionally, tight fits, to prevent them turning when the wing nuts are tightened. The bolts will be an easy fit in pegs B and D, which must have some movement. To prevent damage to the rubber strip, the top of each peg is bound with thin sheet rubber (bicycle or motor-car inner tube), this being secured where shown, with short pins. The pairs of pegs are next inserted in the base holes.

To operate: Slacken the wing nuts whilst keeping the pegs in the holes, and place the ends of the rubber to be tied between pegs C and D, afterwards tightening the nut. Stretch the rubber and bring it between pegs A and B, and tighten the nut. To obtain the necessary extra tension before tying, a hardwood key (**3** in. long × $\frac{1}{2}$ in. wide and $\frac{1}{4}$ in. thick, with a **2** in. length of $\frac{3}{16}$ in. birch dowel inserted for turning) is placed between the two pairs of pegs and given a quarter turn, thus pushing the pegs and the rubber further apart.

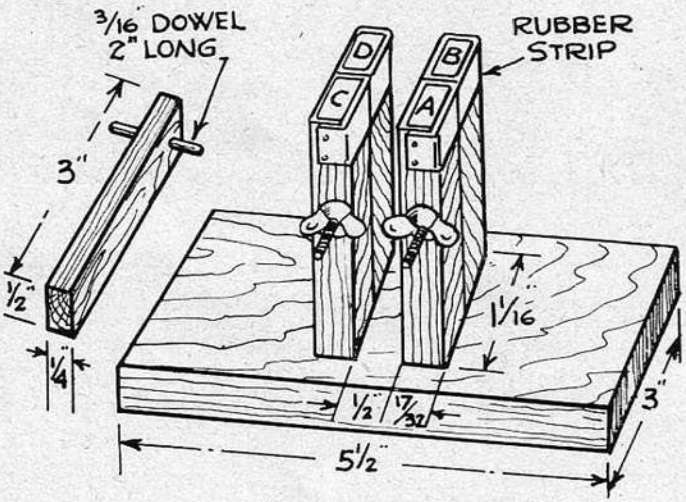

Fig. 61.

The rubber is best tied with best quality silk, which is taken round the strip three times before tying. A touch of rubber solution to the short ends will make a permanent and non-slippable joint.

This joining, by the way, should be done before lubricating the rubber.

We now loop the rubber into the number of strands required, and it is a good idea to put a bobbin on each end, held with a rubber band, stretched and wound on. The length of the rubber is often greater than the distance between the hooks, and we have already seen how to keep it taut by means of a fitting on the propeller shaft, but there is another method of doing this in the rubber itself. The rubber is wound so that it twists itself up into a shorter length.
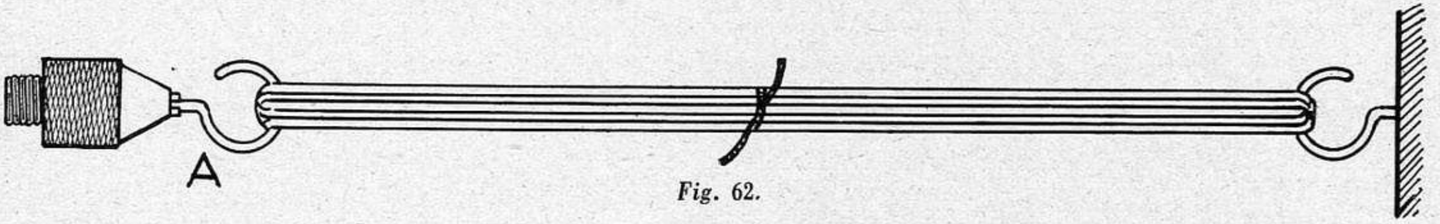
Fig. 62.

The simplest way to do this is to make up the motor into twice the length, but with only half the number of turns. In the centre of this we tie a piece of cotton, or fix a bobbin, so that we shall know the exact middle when the rubber is wound up. We attach one end to a fixed hook and the other to a winder of some sort (A in Fig. 62). It is then wound up a few turns. The best number will have to be found by experiment, but you might try about 50 to start with. Fold the wound skein into two, so that you have the correct number of strands for the motor, and put the two ends on a hook or a bobbin. Stretch the skein and then release it, letting it wind itself up, and see if the length is slightly less than the distance between the hooks in the model. If so, all is well, but if it is a bit slack, unhook the ends and wind on a few more turns. If it is a bit on the tight side, try a few less turns. Another method is to wind each loop separately, and so it is equally successful with an odd number of loops. In this case a special gadget has been made for winding and testing rubber motors. This is shown in Fig. 63, and we will let Mr. S. E. Capps, the originator, describe it.

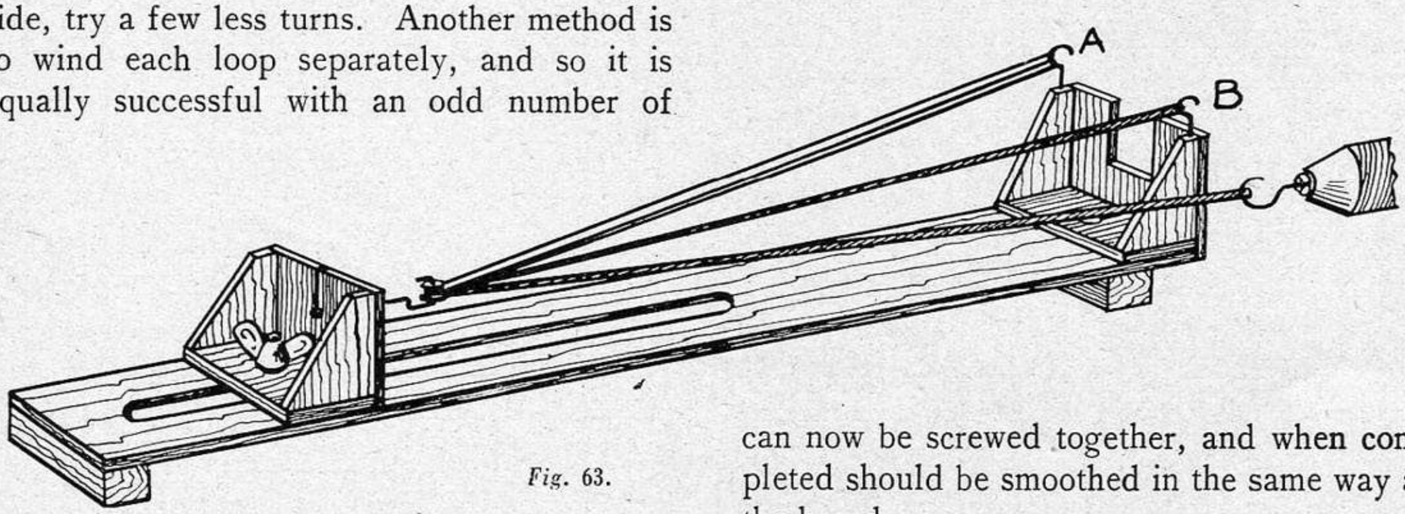

Fig. 63.

The baseboard A is prepared first from a piece of straight-grained deal or pine (any wood will do, provided one is able to work it properly) about 4 ft. long, planed smooth, and the ends carefully squared. The slot is next cut, and is $\frac{3}{8}$ in. to $\frac{1}{2}$ in. wide. This is easily done by first boring a hole at each end and cutting down with a fine saw. Carefully mark off and drill all the holes at both ends. The two cleats, B, should now be made and fitted in place, after which the whole board should be sandpapered all over with No. 0 or No. 1 sandpaper, to remove all sharp corners and edges. This is important, as any sharp edge or corner coming in contact with the rubber would probably cause a small cut, which would eventually result in the fracture of the motor.

Next cut the four diagonal pieces, C, for the sides of head and tail parts. These should be just as carefully made. Cut the two bottom plates, E, and drill the holes shown. These can now be screwed together, and when completed should be smoothed in the same way as the board.

The head or fixed part can now be fitted and fixed to the board with a round-headed bolt. The final parts to be made are the formers, D, to take the nose and tail plugs, G, of the model whose motor is to be tested. These are made of three-ply wood, and after being smoothed are fixed with small woodscrews in the corners. The whole may then be varnished or enamelled.

To use this gadget for tensioning our motor, we put a hook in the tail part and two hooks in the nose part. Refer again to Fig. 63. We put one end of the rubber motor on the tail hook and the other end on hook A at the front. Taking each loop in turn, we wind it up a few turns and transfer it to hook B. We wind them in the same direction as the propeller revolves. When all are wound we put them on the nose of the model, holding the propeller to prevent it turning, and then put the nose into place on the gadget and release the propeller. The rubber will then twist itself up into a sort of rope. If we move the tail anchorage forward till the distance between the two hooks is the same as it will be in the model, we shall see if the loops have been wound up the right amount.

We have not so far said anything about lubricating the rubber motor, which should be done before winding, so let us see what it is all about.

We know that where two surfaces slide against each other they are lubricated to reduce friction and prevent undue wear. For the bearings of engines we use oil, and for a dance floor french chalk is used. For our rubber motors we use a special rubber lubricant. It should be well rubbed into the strands of the motor, so that when two pieces are rubbed together they feel very slippery. Lubricate the rubber evenly and freely.

When putting the model away for a few days, all the lubricant should be washed off the rubber, the rubber dried and stored in an air-tight tin. A little french chalk in the tin also helps to preserve the rubber.

The next consideration is fixing the rubber in the fuselage. This, of course, applies to the rear end, since the front will be attached to the nose-block or gearbox. We can either fix it on a hook fixed to the rear end of the fuselage, or use some form of motor stick. Let us consider the motor stick.

This is an arrangement whereby the nose-block and rear hook are fastened to a rod or " stick " so that all tension and torsion of the motor is taken by the stick. There is then no strain on the fuselage from the rubber. Also we can arrange it so that the motor is wound up before it is put in the fuselage, so that, should we be unfortunate enough to have the rubber break, the model will not be damaged.

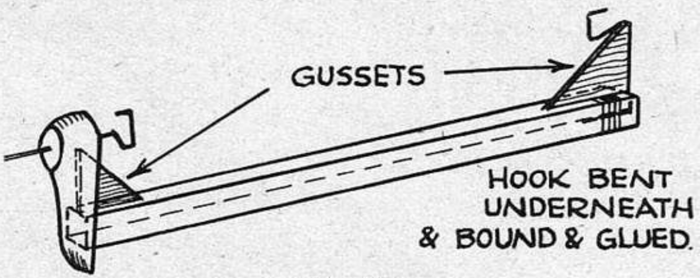

Fig. 64.

Such a motor stick is shown in Fig. 64. It consists of a square or oblong stick of balsa with a hook at the rear and a nose-piece at the front. The rear hook can be made of 18 or 20 gauge wire, bent to form a hook at the top, then bent round under the stick at the bottom and bound and glued in place. A gusset of ply or balsa is glued on to hold the wire upright. At the front the nose-block is also glued on with a gusset. We shall then need some means of keeping the nose on to the front of the fuselage. This can conveniently be a hook fastened to a longeron or cross strut an inch or two down the fuselage, connected by a rubber band to a hook at the bottom of the nose-piece and under the stick.

An improved type of motor stick can be made in the form of a tube, which encloses the whole of the motor. This tube is quite a good idea when we have a fuselage with lots of thin stringers, since it prevents the rubber hitting them. Also it is an easy matter to fit a small nose-block that will easily knock out on landing, and so help to save the propeller from damage. The front end of a motor tube is shown in Fig. 65. Here it is glued to a nose plate that fits up against the front of the fuselage in the same way that a nose-block would fit. In this plate we can have a small removable nose-block. For small models we can make the tube from 1/64 in. sheet balsa covered with paper, and for large models we can use $\frac{1}{32}$ in. balsa covered with silk. To make the tube we soak the balsa in boiling water—in the copper on wash-day is a good idea—until it is thoroughly hot. Then we borrow the broom (since we used the copper!) and wrap the balsa round the handle. When it is dry we can lap the edges about $\frac{1}{8}$ in. and glue them together. We want to make the tube as large as we can get in the fuselage, to give as much room as possible to the rubber. For the rear end of the tube we make a disc of balsa from two pieces glued together with the grain crossing, with a large hole to pull the rubber through. To hold the rubber we can use a peg of cane or bamboo, and, to prevent it turning, four blocks of balsa can be glued on as shown in Fig. **66**. If we are using two gears, it would be best to have two holes in the back. With this type of motor tube we can wind up the motor inside the fuselage without fear of damage if the motor should break. A motor stick, or tube, has one disadvantage for scale models, and that is the difficulty of adjusting the position of the rear hook to assist in getting the C.G. in the right place. The only thing to do is to make the stick long in the first place and cut it shorter bit by bit until we get it right.

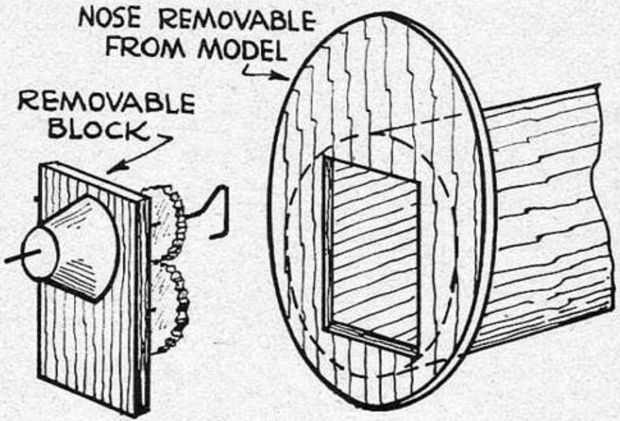

Fig. 65.

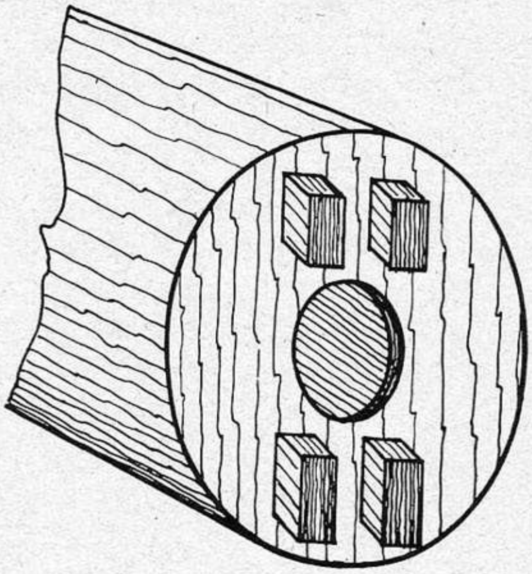

Fig. 66.

If we do not use a motor stick we shall have to fix up some means of attaching the motor to the rear of the fuselage. If we turn again to the drawing of the Miles Trainer, we can see two pegs passing through the fuselage from top to bottom, one at the bottom of the leading edge of the rudder and the other just behind the windows. The ends are supported in large blocks of balsa. These two pegs provide two alternative positions for the motor, which is hooked on to a paper tube. To the middle of the tube is fixed a balsa handle for holding the tube in place while we put the peg through. There is a little sketch of it just above the fuselage, in front of the rudder. The tail-plane and rudder are made detachable, so that we can put the tube in from the rear. This is an excellent method of adjustment.

We must remember that there may be a strong pull on the rubber when it is wound up, and there may also be some tendency to twist the fuselage, so where the motor is fixed we must strengthen the fuselage. Small sheets of balsa covering a number of stringers, or across a pair of longerons, are useful here.

Another method for varying the position of the rubber motor in the fuselage, a neat fitting, is shown in Fig. **67**. The ply bulkhead should be fixed in the fuselage about level with, or just behind, the leading edge of the tail-plane, and we need to make the tail-plane removable so that we can get at the bamboo plug. It is usually quite easy to arrange this, as the tail-plane is generally at the top of the fuselage, and can have the rudder fixed on. Unless we have a very small model, it is best to use ply about $\frac{1}{16}$ in. thick for the bulkhead, with stiffeners $\frac{1}{8}$ in. square. The bamboo plug can be about $\frac{1}{8}$ in. diameter. We can make this plug,

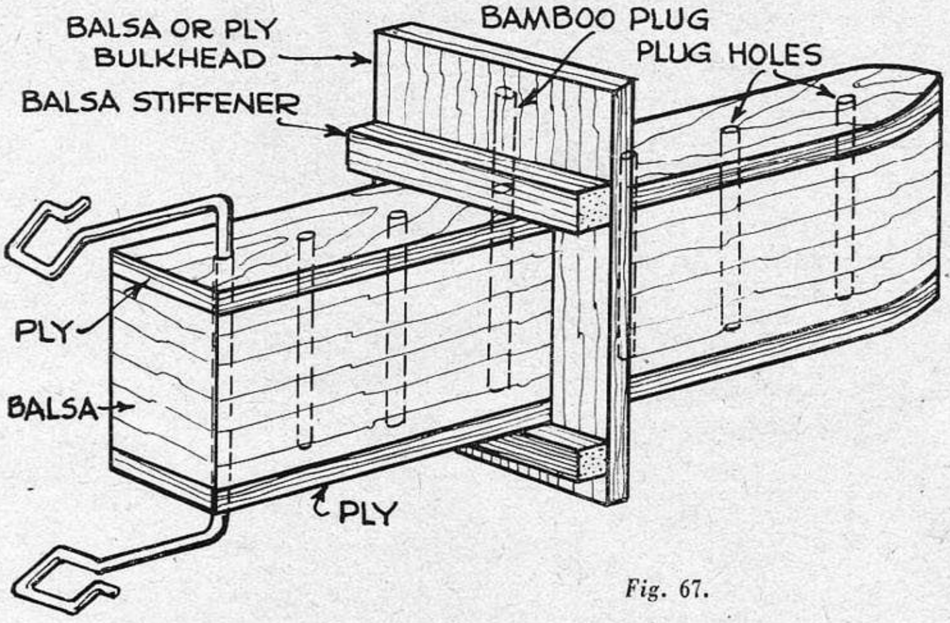

Fig. 67.

or any odd bits of small dowelling for that matter, with a very simple piece of apparatus. All we need is a piece of steel plate about $\frac{1}{16}$ in. thick, with a series of holes of different sizes in it. If we cannot find anything better we can get a large hinge—a shiny one is best—and put the holes in that. A set of suitable drills can be obtained for 6d. Need we say where? Now, to make the plug or dowel we cut a piece of wood roughly three or four sizes larger than the finished size we want, and push it through one of the larger holes. Then we push the wood through the next hole smaller, and so on until we have got it down to the right size. Don't try to do a length of more than about six inches at a time, and push a very little at a time. If we can it is best to put the plate in a vice and push with one hand and pull with the other. The next part of the fitting is the sliding block. For this we can use a piece of balsa about $\frac{1}{4}$ in. square, and put a piece of ply about $\frac{1}{32}$ in. thick each side, glued on. The length will depend on the distance between the bulkhead and the rear end or sternpost of the fuselage. With the block as far back in the fuselage as it will go, the front end can be about $\frac{1}{2}$ in. in front of the rear face of the bulkhead. With the block in this position we want a hole through it to take the bamboo plug just behind the bulkhead. From there to the end we drill a series of holes about $\frac{1}{2}$ in. apart. We can put the wire for the rubber hook through the ply and balsa about $\frac{3}{16}$ in. behind the front edge of the block. If we use a bobbin on the rubber motor we can cut away the balsa between the ply, and use another bamboo plug to hold the bobbin in place. The sketch shows two hooks suitable for two skeins of rubber, but two hooks are also useful for one skein. If we put part of the rubber on one hook and part on the other, it helps to prevent the rubber from bunching in the rear of the fuselage. The block should slide fairly easily through the bulkhead, and by putting the plug in different holes we get a very fine adjustment of the rubber, with nothing showing on the outside. If our model should have the tail-plane about half-way down the fuselage we could still use this idea by fixing the tail-plane to the sides of the fuselage and having the top, complete with rudder, to be removable.

For getting this tail-block in position in the fuselage a rod is needed, since the block will have to be put in from the nose. The writer used a piece of $\frac{1}{4}$ in. × $\frac{1}{4}$ in. hard balsa, though spruce or deal would be just as good, and stand rougher treatment, with two pieces of $\frac{1}{4}$ in. × $\frac{1}{16}$ in. ply about 5 in. long, held on to one end with rubber bands. This formed a springy sort of fork, into which the tail-block was slipped, complete with motor. The rod was long enough to stick out of the front of the fuselage about 5 in. when the block was in position. The nose-block was held against this end by the tension of the rubber motor. When the dowel was in place in the tail-block it was a simple matter to pull the nose-block off to withdraw the rod.

To wind up the rubber is rather a tedious job if done by hand, so we usually resort to some sort of assistance in the form of a geared winder. Fig. 68 shows one type made from a hand grindstone. This is bought in bits from the sixpenny store, but you do not need the wheel. Instead we have a distance-piece and bar of iron or brass. The distance-piece can be either metal or wood, and could be cut from a cotton reel. The strip of brass or iron can be about ½ in. wide by $\frac{1}{16}$ in. or $\frac{3}{32}$ in. thick, and about six inches long, bent at right-angles at each end, and has a hole in the middle. It is bolted on to the spindle of the grinder, and the two ends should be bound with rubber to prevent damage to the airscrew. The winder is then clamped on to an iron or steel bar about ½ in. or ⅝ in. square, pointed at one end and bent at right-angles at the other. This can then be pushed into the ground with the foot. It is a good idea to drill a hole for the propeller shaft in the spindle of the grinder, or solder a piece of tube on.

Another form of winder can be made from a hand drill. A hand drill can be bought from the 6d. stores (in bits), and all that is needed in addition is a hook or prong arrangement. We can make the hook from a piece of wire or a propeller shaft of a fairly heavy gauge, say about **14**. For small models this will do very well, but if we have a lot of rubber to deal with it is much safer to solder the hook in a piece of brass tube, or wind on some thickish copper wire and solder it. The idea is to make a larger diameter for the chuck to grip. For the prong type we can wind two pieces of wire together round a piece of brass tube about ⅛ in. diameter, bend them outwards and forwards about ¼ in. from the front end of the tube and solder them on, opposite to each other, toasting fork fashion. The brass tube is then held in the chuck.

The hook type winder is shown in Fig. **69** with the addition of a revolution counter designed by Mr. J. Youhill. This counter consists of a block of hard wood clamped to the drill frame with two hook bolts made from ⅛ in. or **4** B.A. screws and nuts. Through the wood is a $\frac{3}{16}$ in. hole, or a brass bush drilled $\frac{3}{16}$ in. to take the **2** B.A. countershaft. At one end of this shaft we have two nuts locked together, or preferably soldered to the shaft, with holes drilled in all six flat faces of one nut, and short pieces of wire soldered in. Two more nuts and a washer are put on the shaft, which is then threaded through the block. Next we put on a spring washer and two more nuts. With the wood block on the drill frame, the first two loose nuts are adjusted so that the star-wheel end is in a convenient position for the striker bar. The two nuts are then tightened against each other so that they will not alter their position. The other two nuts are tightened against the spring washer so that the shaft will revolve easily but will not slip round on its own when shaken. The striker is a piece of wire or a small screw fixed in the large gear wheel so that it will strike each piece of wire projecting from the " star " wheel. A piece of brass plate about **20** s.w.g. is screwed to the wood block so that it projects about 1¾ in. This plate either has a slot cut in it or has a piece of wire soldered on to form a slot. Poking through this slot is a pointer, which can be a short piece of wire soldered to a nut that screws easily along the shaft. On the extreme end of the shaft is a terminal nut, fixed on by

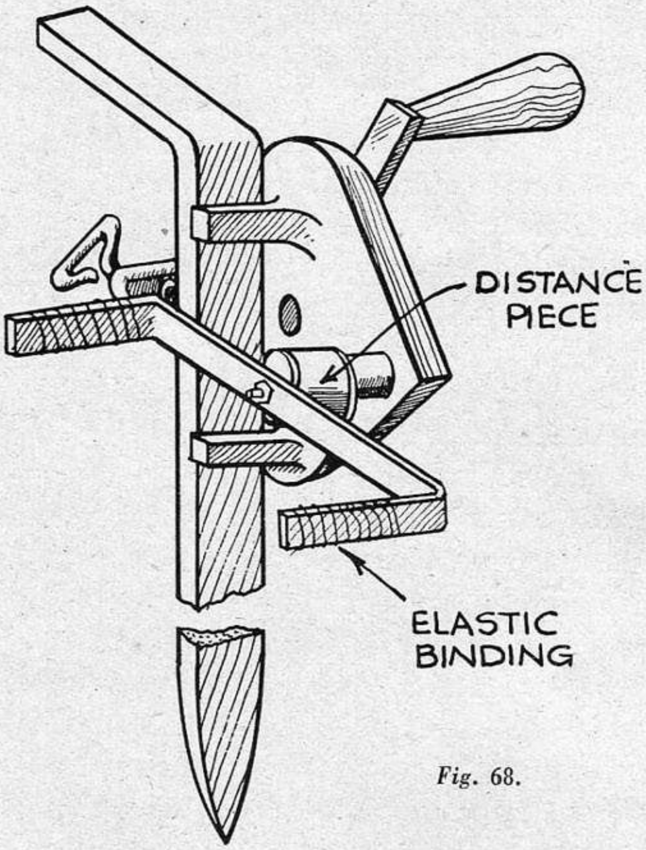

Fig. 68.

soldering or with a lock nut. This terminal nut is for returning the pointer to zero after winding up. Turns are counted on the winder hook and the brass plate is marked to suit.

An extremely good looking revolution counter has been designed by Mr. Douglas Young, and we will let him describe it. Fig. 70.

Some Meccano parts and a tooth powder tin are required, and you needn't even solder unless you want to. The cost is around 1s. 6d. to 2s., with the tooth powder thrown in. It is dead accurate, counts up to 950, and has a zero setting for use at will.

The illustration shows the counter attached to the most popular winder in use to-day. But one screw, apart from the winder jaws, holds it, so it can be adapted to fit any winder.

Get first the handsome- and professional-looking (when it's painted) case, the carbolic tooth powder tin. This one costs threepence, and measures 3 in. × $1\frac{1}{4}$ in. It must not be any smaller. The other parts required are Meccano rods, two 6 in, and two 3 in. long, two worm gears, one 19-tooth × $\frac{1}{4}$ in. gear-wheel, and one 50-tooth gear-wheel and five collars.

Punch a hole in the dead centre of the top and the bottom of the tin. Do this with a spike which burrs the edges inwards; this makes a better bearing than a sharp-drilled hole.

Bend a 3 in. rod at right-angles in the middle, file one of its ends into what you think a smart pointer should look like. The other leg of the right-angle will henceforth be referred to as the centre shaft (P) and must be fitted in the holes just made. Use the bottom of the tin with its raised edges as the " face," and the lid as the " back," which is left removable for inspection.

Fit the 50-tooth gear (G4) to the centre shaft, bush first. Next comes shaft B, a 3 in. rod revolving in bearings burred inwards at points which can be judged visually. This is not as difficult as it seems, since there is a great deal of leeway provided by the fact that G4 need not mesh with G2 dead on its axis.

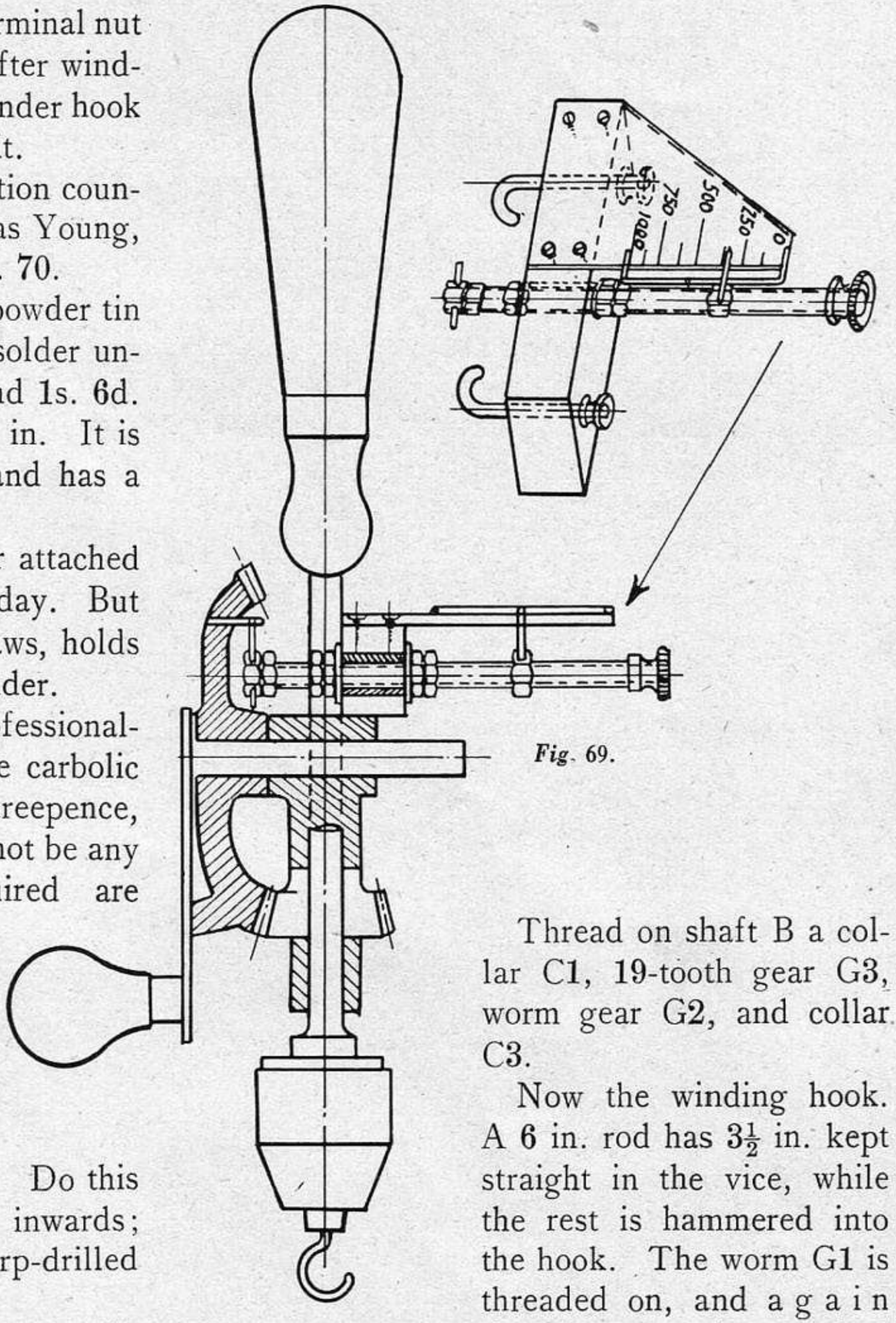

Fig. 69.

Thread on shaft B a collar C1, 19-tooth gear G3, worm gear G2, and collar C3.

Now the winding hook. A 6 in. rod has $3\frac{1}{2}$ in. kept straight in the vice, while the rest is hammered into the hook. The worm G1 is threaded on, and again the tin case is punched to make bearings, this time through the lid-flange. It leaves only $\frac{1}{16}$ in. of the tin outside of the bearings to hold the shaft, but it is enough. The lid will have to be nicked to fit over this, and a similar nick in the lid will have to be cut to fit over rod D, which fits parallel and similarly to rod A. Rod A, of course, revolves, held in position by collar C4, while rod D is fixed. Fixing can be done by soldering collar C2 to the tin and a dab of solder on the point where the rod goes through the tin. While the soldering-iron is hot, put a 5-hole Meccano strip behind the face, with a dab of solder through its outer holes, to reinforce the rather weak tin.

If you are determined not to get the soldering-iron out, leave out this strip and substitute a threaded collar for the plain collar C2, fixing it to the tin with a screw into its end. You will then probably have to use threaded rod in place of plain rod D. Keep rod A at right-angles to rod B, and, as a guide, the measurements between centres on mine are, rod A to centre shaft P, $\frac{9}{16}$ in., P to D, $\frac{3}{8}$ in. A piece of $\frac{1}{2}$ in. tin strip folded over rod D, drilled to fit under a screw conveniently situated on the winder, holds the counter still when it wants to turn, and finishes the mechanism.

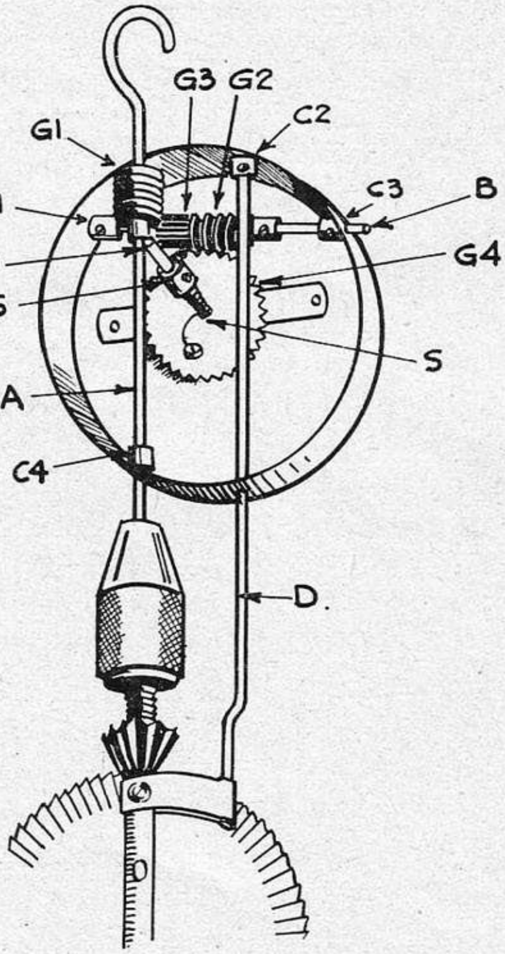

Fig. 70.

The worm gears revolve once to turn the flat gears one tooth, therefore the total reduction is one to 19 × 50 = 950. Stick a paper disc on the " face." If you know how to divide it into 9½ divisions, each representing 100, you can calibrate it accurately. If you don't, then start from 12 o'clock, wind 100, and make a mark, similarly all round.

The zero-resetting device is optional, but jolly well worth adding. It consists of spring " S." Don't get scared of making a spring on the score of not being a metallurgist. Heat treatment is not necessary. This was made by unwinding a Meccano spring to get a few inches of straight wire, then winding it round a piece of wire somewhat smaller than the rod, for about six or eight turns. It springs out to a size which grips the centre shaft tightly. When the lower end is secured beneath a screw and nut put through a hole in wheel G4, it allows the pointer to be turned by hand clockwise, but not anti-clockwise. The top end is left free, and collar C5 is to stop the spring riding up. Start the spring from the bottom, coming up clockwise.

You turn the pointer clockwise to zero by hand after each wind, yet, when winding, the pointer positively registers without slip or springiness.

Coloured aero dope finishes the metal, and put plenty of transparent dope on the paper face. Everybody will want to borrow it as soon as you bring it out, so put a clockwise arrow on the face to show which way to set it to zero.

Here are a few reminders to finish the chapter. Lubricate the motor well and truly, but not so much that the lubricant flies all over the place. Don't over-wind the rubber. A revolution counter is a great asset.

CHAPTER XIX

LANDING GEARS

METHODS OF SPRINGING. WHEELS.

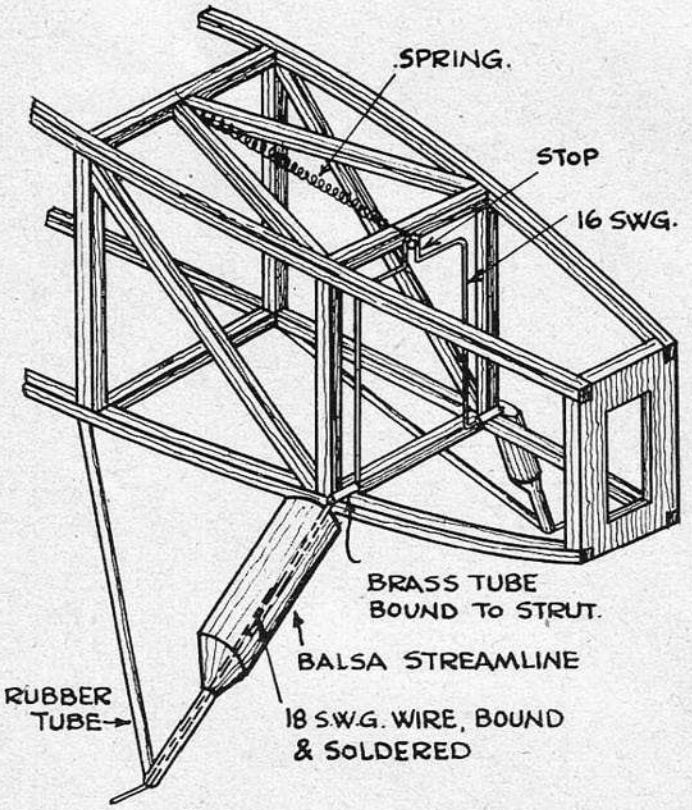

Fig. 71.

WE have already seen that undercarriages are better left off when possible, but there is a considerable number of aeroplanes with fixed undercarts. Where we have an undercarriage, some form of springing is advisable, unless the model is very small and light. Let us turn again to the drawing of the Miles Trainer and see the neat and effective undercarriage leg there. We make this by threading a piece of steel wire through a length of spring curtain rod, soldering it at each end. The bottom end is then bent at right-angles to form the wheel axle, and the top is fixed to the aeroplane. In the case of the Trainer, a U piece is soldered on, and the two ends of the U fit into a balsa block. Another effective undercart is shown in Figs. 71 and 72 and is that fitted to Mr. Hasting's Hawker Fury. Fig. 71 shows the inside works, and we can see how a piece of wire has been bent to shape, with brass tube threaded on. The tubes are then bound and glued to the fuselage structure, and a spring is fixed to the wire at the top. The other end of the spring is fixed to the fuselage, so that it is stretched when the undercarriage legs are pushed backwards. Note that where the spring is fastened to a cross strut two more struts have been fixed between this point and the longerons. Also struts have been fixed up from the bottom longerons to the top, just behind the brass tubes. To represent the rear struts of the undercarriage, a piece of rubber tube or cord is used. This is glued in place with only a slight tension, just enough to prevent it sagging. The front leg is faired with balsa.

A few more methods of springing undercarriages are shown in Fig. 73. The main point is to have as much spring as possible. For instance, a sketch is shown of a wheel sprung inside a spat, but if it is at all possible we shall do best to have the leg sprung also. The chief trouble is that with the spatted type it is the spats that hit the ground. There is also the trousered type, that suffers from the same trouble. In this type we can have the trousers held against the under surface of the wing with rubber bands that pass over the top. The trousers will then knock off on landing.

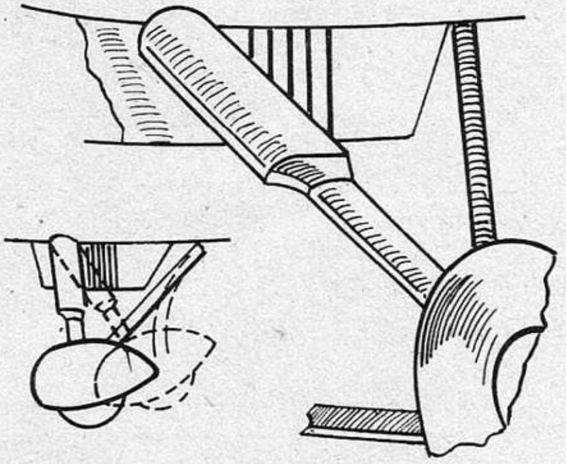

Fig. 72.

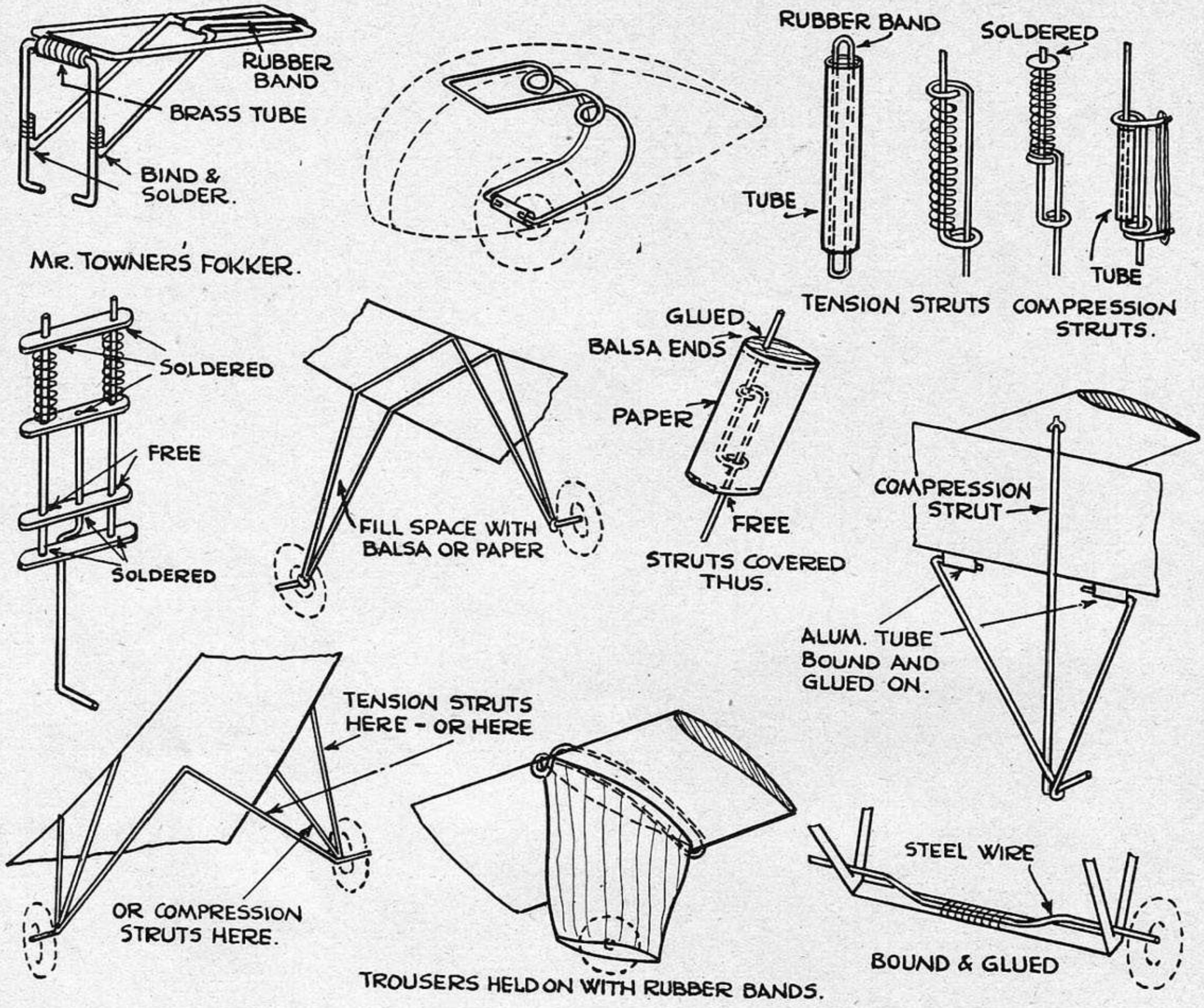

Fig. 73.

In Fig. **74** is a really smart way of springing a cantilever undercarriage leg that would do very well for a model of the Gloster Gladiator. The sketch shows the leg for a large, heavy model, using steel tube with the wheel axle soldered on. But for a smaller model we can use two pieces of bamboo $\frac{3}{16}$ in. by $\frac{1}{16}$ in., with a piece of $\frac{3}{16}$ in. square balsa glued between them. The wheel axle could be bound and glued to the front piece of bamboo. At the top a piece of wire is put across the two pieces of bamboo and rubber bands are attached to it, the balsa being cut away. The rubber bands are fixed to formers in the fuselage at the top and bottom, using wire hooks or loops. The strength and tension of the rubber can be adjusted to suit the weight of our model.

We can see from the foregoing description that steel wire plays a very large part in most undercarriages for strength of the legs themselves and for springing. The wire used varies in thickness according to the weight of the model and the design of the undercarriage. We can, however, quote a few instances as a guide. Let us look at Fig. **73** again, and take some of the examples in turn. The one at the top left is suitable for a twin-engined machine with undercart retracting into the nacelles, and about a ten-ounce model. The wire could be **16** s.w.g. throughout. The one below would do for a **14**-ounce model using **14** s.w.g. wire and an eight-ounce model using 18 s.w.g. The two below and alongside could be 20 s.w.g. for an eight-ounce model, and 16 s.w.g. for a 12-ounce one. For the top middle we could use 20 s.w.g. for a six- or eight-ounce model, and for the bottom right 20 s.w.g. for an eight-ounce machine.

It is best to bend the wire in as few pieces as possible, though there is a limit to the sharpness of any bends. This limit is best found by experiment, and it is suggested that the reader tries bending a few odd bits of wire of various sizes to see how sharp a bend he can get without it cracking. The sharpness depends to some extent on the tools used, since a sharp edge increases the tendency to crack. For bending the wire we can do with two good strong pairs of pliers, one flat-nosed and the other with one flat and one round side.

When we have wire fixed to balsa it should be bound with thread and well glued, but a better job would be made by glueing a piece of thin ply to the balsa first.

Now we come to the wheels. These can be bought or made up. Very good-looking ones can be obtained made of solid balsa or hollow celluloid. They can also be purchased made from sponge rubber, or real pneumatics, in an assortment of sizes. We can make use of the heavier varieties for the main wheels with advantage, and the lighter ones, that is, hollow celluloid, for tail wheels. We could, of course, use the celluloid ones for the main wheels, but a little extra weight is usually an advantage in this position. If we can put an aluminium or brass bush in the main wheels they will run more freely.

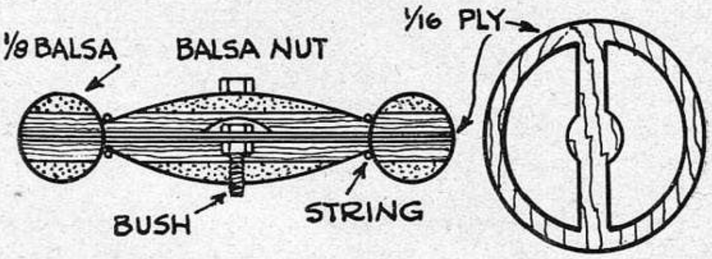

Fig. 75.

The best way of making wheels is to start with a ply disc, as shown in Fig. 75. We can cut away some of the ply to lighten it if desired, and then the rim is glued on. This is cut from $\frac{1}{8}$ in. sheet in circles and is glued on with the grain crossing. A screwed bush is put in the middle of the ply disc, and this bush

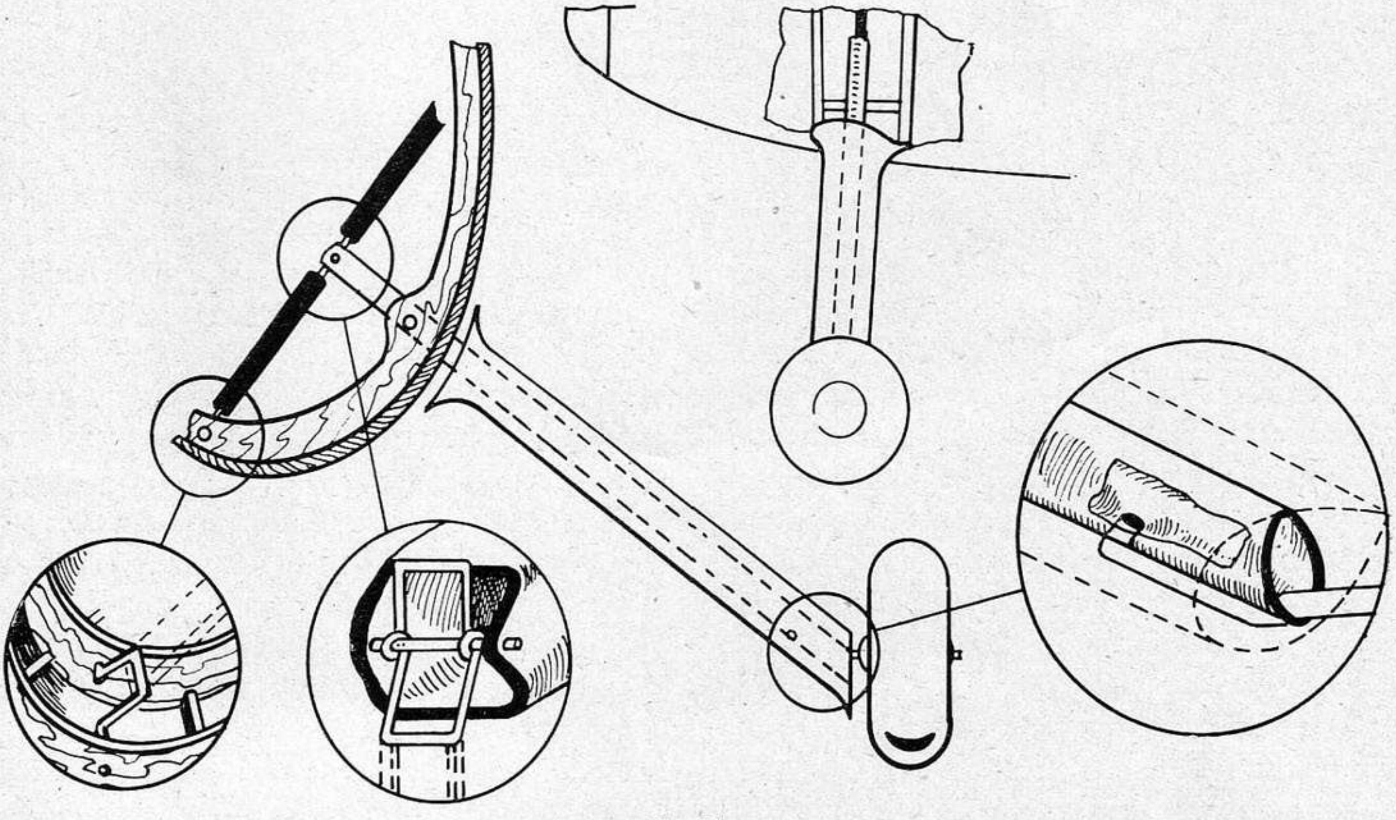

Fig. 74.

"NIGHT PATROL"

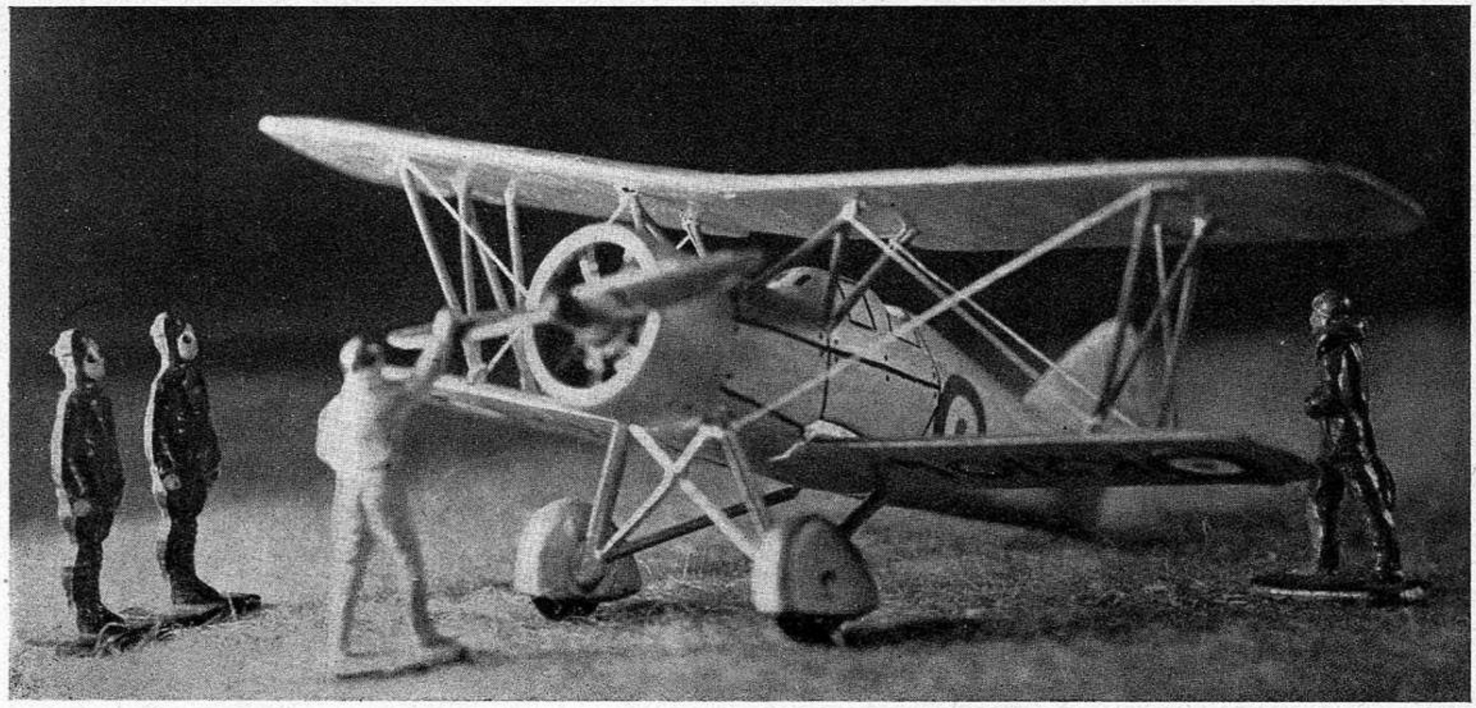

Many scale model enthusiasts like to arrange their models in realistic " set-ups." Here is an excellent example of what may be done with a few lead soldiers.

can be held in a hand drill for trimming the rim to shape. The drill should be held in a vice or fixed to a table or bench, and the wheel can be turned, using first coarse and then fine glasspaper to shape the rim. The middle of the wheel can be shaped in this way, but we shall probably have to do the second side on an extra piece of ply. It can then be glued to the ply disc; and, to add a more realistic look, string can be glued round between the rims and middles. On the side opposite the bush it will be a good idea to stick on a nut or washer to prevent wear.

Wheels are best held on their axles by small washers soldered on each side. Should the reader be unable to solder, the next best thing is to bind on a little bit of thread and hold it with a spot of glue. The spot of glue can be pushed to shape with a wet finger if a cellulose type is used.

The usual thing to hold the tail wheel will be a small wire fork with the ends turned in, rather like the top right undercart in Fig. 73. This fork is then bound and glued to a fuselage former or a bamboo strut. When the tail wheel is faired, i.e. a small spat, it can be fixed in with the axle glued at each end to the fairing.

Chapter XX

FINISHING

COVERING. DOPING. COLOURING.

After spending many hours in building a model, squaring up each part and generally going to a lot of trouble and patience, very often the builder gives the final covering and finish little attention. Why this should be seems a mystery; unless it is that the builder, having got so far, rushes the last stages to see what the model will look like when finished. But surely a beautiful piece of workmanship deserves a better finish than is often given?

It is hoped, therefore, that in this chapter the model-builder will be encouraged to turn out the job properly, and the extra time expended will amply repay him.

Let us assume that the construction part of the aircraft is all complete and that all longerons, spars, tops and bottoms of formers, etc., are all smooth and make a gently flowing curve.

If, however, they do not, rectify it *now;* any deviation of a stringer from its correct path should be attended to.

The stringer can be cut loose from the offending slot in the former, and with a little bit of packing and cement the whole can be made rigid and of correct formation.

If the front of the model is solid, or planked, or covered with sheet wood, see that there is no abrupt shape to cause a wrinkle when the covering is attached.

Where a round or curved surface is to be covered, such as the sides of an oval fuselage, make sure the stringers project slightly above the formers. The formers themselves can be cut away slightly between the stringers so that the covering does not touch the formers at all, otherwise your sweeping curves will be spoilt by vertical projections where the formers are placed.

Where thin parts are attached to a spar, such as the trailing edge of a wing where the ribs are affixed, it is as well to stick on little paper fillets, which must be flush, of course.

These will help to support the covering right up to the angle formed between the rib and the trailing edge—a great source of wrinkles. In difficult parts, such as a tail unit, where the elevator root ribs touch the fin, it will probably pay to fill in with 1/64 in. sheet balsa. This makes a surface to fix the covering to.

This, of course, applies to all types of fairing, such as that between the wings and the fuselage.

Remember, too, the celluloid used for the cabin-top and sides. Make sure the celluloid is fitted *flush* by cutting away very slightly the former, or whatever it is attached to.

When we are quite sure that everything is as smooth as possible we can commence to cover the job.

Japanese tissue paper is the usual material, and can be purchased in different weights and thicknesses.

It is usual to cover the fuselage in a fairly thick tissue, or even a light type of bamboo paper, using a lighter grade for the wings and tail.

On closely examining the paper it will be seen there is a kind of grain running in one particular direction. This grain should always lie along the straightest part to be covered.

You will remember in discussing the different types of balsa wood, the type with the grain running the full length of the strip could be used for tubular and curved surfaces; that is to say, for instance, a motor cowling with the grain running straight fore and aft.

The same idea applies to the paper as well.

To take the easiest example of covering, let us consider a flat-sided fuselage. Cut the paper the correct shape, leaving about a quarter of an inch to spare on the top and bottom, and then, using a paste such as a photopaste for the adhesive, apply a little to the front former and place the paper in position, with a slight tension at the tail end to make sure it is lying in its correct position. Gently apply a little paste to the top and bottom of the longerons, but not on the face we are covering. The quarter of an inch extra either side of the paper can now be pressed down on the paste, and should adhere to it. Complete by sticking the tail end.

Do not stretch the paper tight, but make sure it is even and that no wrinkles have occurred.

Do the opposite side the same way, then the top and bottom. Trim off the extra, when the paste is dry, with a sharp razor blade.

Gently spray the paper with a very light spray of water or steam, or even a very delicate application of a very soft brush. The action of the dampness will tighten the paper.

Should, however, there remain any slight wrinkles, these can be eliminated in the following way.

Gently damp with water the wrinkle and surrounding paper—perhaps a square inch—and by damping the stringer, or whatever the paper is attached to, where the wrinkle starts, it will be found possible with a gentle working of the finger nail or blade of a knife to draw up the wrinkle. You may find the wrinkle will travel along, in which case, damp a bit more of the paper and keep on very gently stretching the paper until the wrinkle has vanished.

When all is thoroughly dry, do *not* warm in front of a fire to dry quickly, as the frame may distort. Give a very, very light rub with the finest glasspaper or very worn glasspaper along the stringers or formers wherever the paste is, as this may harden in very slight pimples.

The whole is now given a thin coat of dope in a dry atmosphere and a temperature of about 70°.

Such fittings as wings, etc., after having been doped and are almost dry, should be pinned down on a flat board for, say, twelve hours. This is the time during which the final contraction takes place, and if care is not exercised a permanent warp may be the result.

It is all quite simple, but take pains, and take your time.

Do not cover too much at a time, and wherever the contour changes stop and imagine which would be the best way to lay the grain of the paper. Then fix this part of the covering separately.

To cover top decking supported by stringers or any tubular section, cut a separate segment of your paper to fit each space between the stringers, allowing enough, of course, to fix on to the stringers.

Never expect the dope to take out all the wrinkles. Make sure there are no wrinkles there to start with, then all will be well!

No scale job is really complete without its proper colouring. Some of the smaller types under, say, eighteen inches span, can be covered with coloured tissue (but remember that, as a rule, coloured tissue does not shrink quite so much as white), or, better still, natural coloured paper.

Where a painted job is required, we start off with any exposed woodwork, such as engine cowling, legs, etc., and the grain must be filled, or at least treated so that it will not rise when the colour is applied.

There are well-known wood fillers on the market, but they may be too heavy. Banana oil, applied and sanded between each coat, is quite good. Shellac can be used. One coat of shellac or shellac polish, which can be purchased at any hardware store for about 6d., will do. When this is dry, thoroughly sand down with old worn-out sandpaper and make perfectly smooth.

The writers prefer a cellulose enamel as a covering, as the part is easily repairable with a cellulose cement, and in the event of a tear in the paper this can quite easily be cut out, a complete panel at a time, tissue stuck in its place and doped, and then finally a cellulose enamel worked on, and all will more or less run into the surrounding existing colour.

When painting the paper, a thin colour cellulose is advisable, and work fast with a soft mop brush between each panel. Should this not be opaque enough, when all is dry mix up a solution of gold size in water, or a 1d. tube of popular glue will do, squeezed out into a little water, and the whole job lightly painted over with this.

This is to form an insulated coat, so that when dry the next coat of cellulose colour can be applied without dragging the original coat.

Using this method, too, one can impose one colour upon another for decoration without the colours running.

Should you have a tapered coloured line from the front to the rear, either side of the fuselage, this line should be painted in first, and, when quite satisfied, the main coats of paint should be added, and, by using a bold drawing stroke with the brush, a sharp line can be worked to define the edge of the coloured streak.

Of course, lettering and so on has to be added. This can be done by carefully drawing out on thin white paper the desired lettering, and where the streak at the side goes through the lettering this can all be worked out and painted in water-colours, and finally edged with black indian ink. Fix the colouring with a coat of banana oil and cut out.

Wet the underside to make it supple and absorbent and apply some ordinary glue—one 1d. tube will do—and stick firmly in place. A further coat of banana oil will waterproof the whole, and any glue showing can be washed off gently with water.

Remember one very important thing: all coloured pigments have weight, and you will be surprised to find that the nose of the machine will probably want another ½ oz. of weight to keep the trim correct after the painting is complete!

In a light machine, if you only colour the fuselage and leave the wings and tail natural, or just the white tissue, it will make a very good effect, and help to keep the weight down.

Watch every little detail. Where rubber bands are used to attach wings, etc., choose a colour that harmonises with adjacent colours.

By persistently sticking at it and improving each model as you go along you will be surprised how "professional" you will become and what an added interest the final finish of a model will give to you.

VIPER II

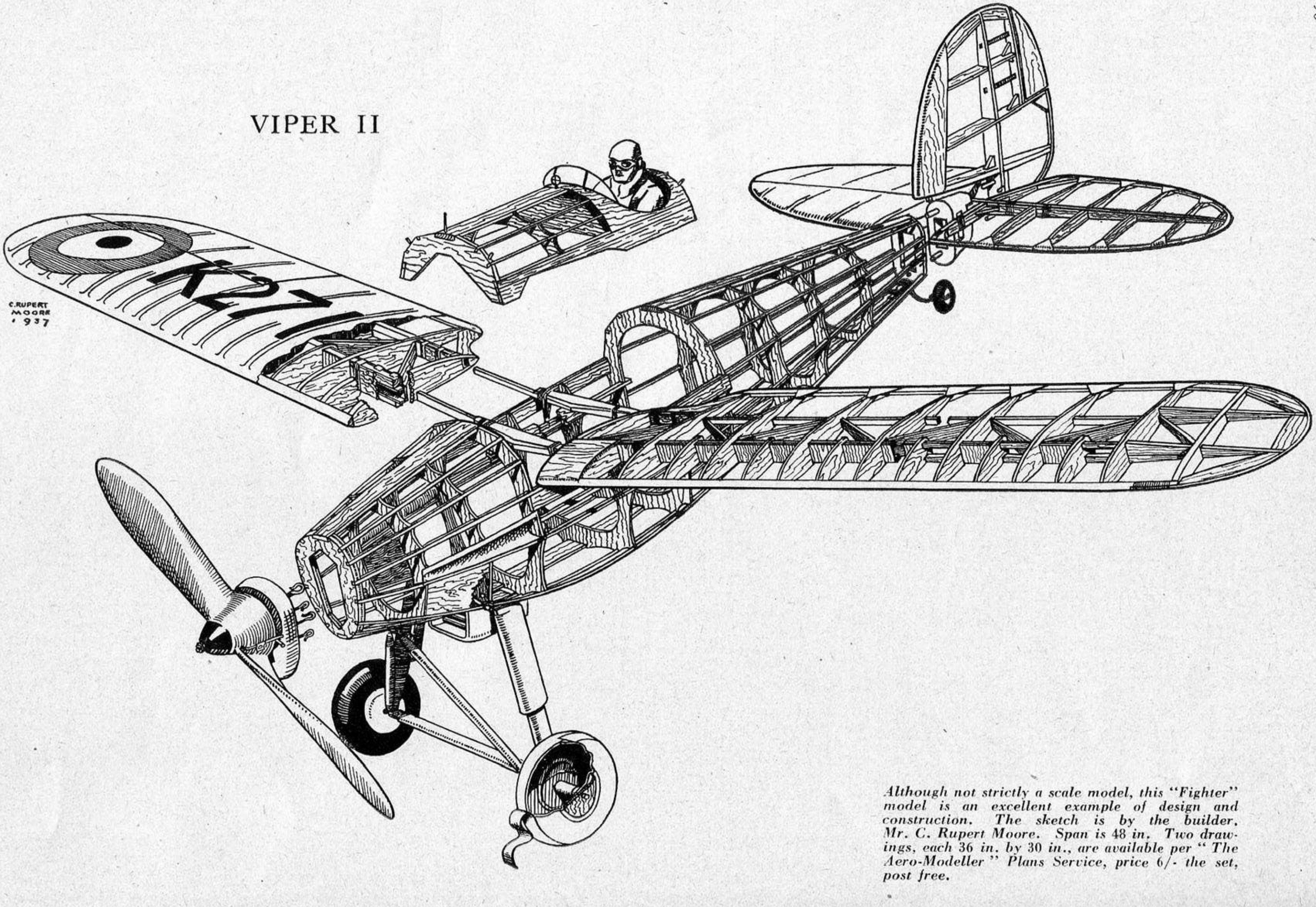

Although not strictly a scale model, this "Fighter" model is an excellent example of design and construction. The sketch is by the builder, Mr. C. Rupert Moore. Span is 48 in. Two drawings, each 36 in. by 30 in., are available per " The Aero-Modeller " Plans Service, price 6/- the set, post free.

CHAPTER XXI

FLYING

TRIMMING FOR GLIDE. POWER FLIGHT.

The last thing is trimming the model ready for flying. This means getting the angles of incidence of wing and tail-plane correct, and the centre of gravity in the right place. You will no doubt have to experiment a bit, so we will try to put you on the right lines. The most difficult is, of course, the biplane. For a start we have the tail-plane and thrust line parallel. The wings have what is known as positive stagger; that is, the top wing is farther forward than the bottom one, which is the usual arrangement. There are however, a few machines with negative stagger, that is, with the bottom wing farthest forward. With negative stagger the bottom wing would need the most incidence, and a monoplane needs about three or four degrees incidence, perhaps.

These various angles are, of course, arranged when the model is put together, but should be so made that you can alter them without too much trouble afterwards.

To get the centre of gravity in the right place it is usually necessary to add weight in some form or another to the nose. It is best to do this first by strengthening the nose. Any extra weight should be bits of lead or solder, etc., as far forward as possible. With a monoplane it is best to try to get the centre of gravity about one-quarter to one-third of the wing chord back from the leading edge. The best position will have to be found by experiment, as it varies with different wing sections. Another thing to help is altering the length of the rubber motor, and the position of the rear hook, putting it farther forward or backward.

When you have the incidences and the centre of gravity somewhere near right, you can try gliding the model. Try it over long grass or a bed of stinging nettles or something similar that will not hurt the model in a crash landing. Launch the model—don't throw it—forwards and downwards, in the way you would a dart, to hit the ground a few yards ahead. Try this a few times, gently and harder, and see how it behaves. It is unlikely that everything will be all right. If the model is tail heavy, or the nose light, it will try to lift its nose and then fall into a dive, as shown in Fig. **76**. Some people get rather confused with this, and think that if it dives it is nose heavy, but if it is nose heavy it will not rise first. If the model is nose heavy it will go straight from your hand and curve over into a dive, even when thrown hard. (Again see Fig **76**.) If you do not get the levelling out when thrown hard, but a straight glide, try a little more incidence on the wing. When you get a good glide, wind the motor up a few turns and try again. This should make the glide a bit longer, and more turns should give a level flight. If now the model tries to rise too much, so that it stalls and dives, try fewer strands of rubber on the motor. This may or may not cure the trouble; if not, put a bit of packing in the nose to tilt the propeller downwards a bit. If the model flies all right, except that it does not climb even when fully wound, try more strands of rubber

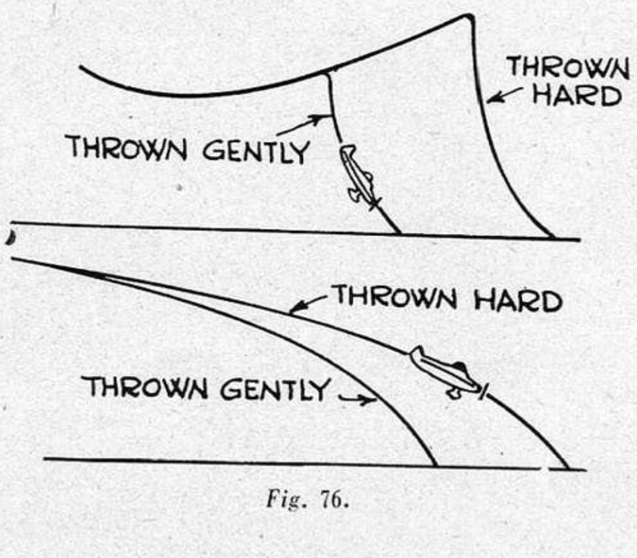

Fig. 76.

THE WESTLAND "LYSANDER"

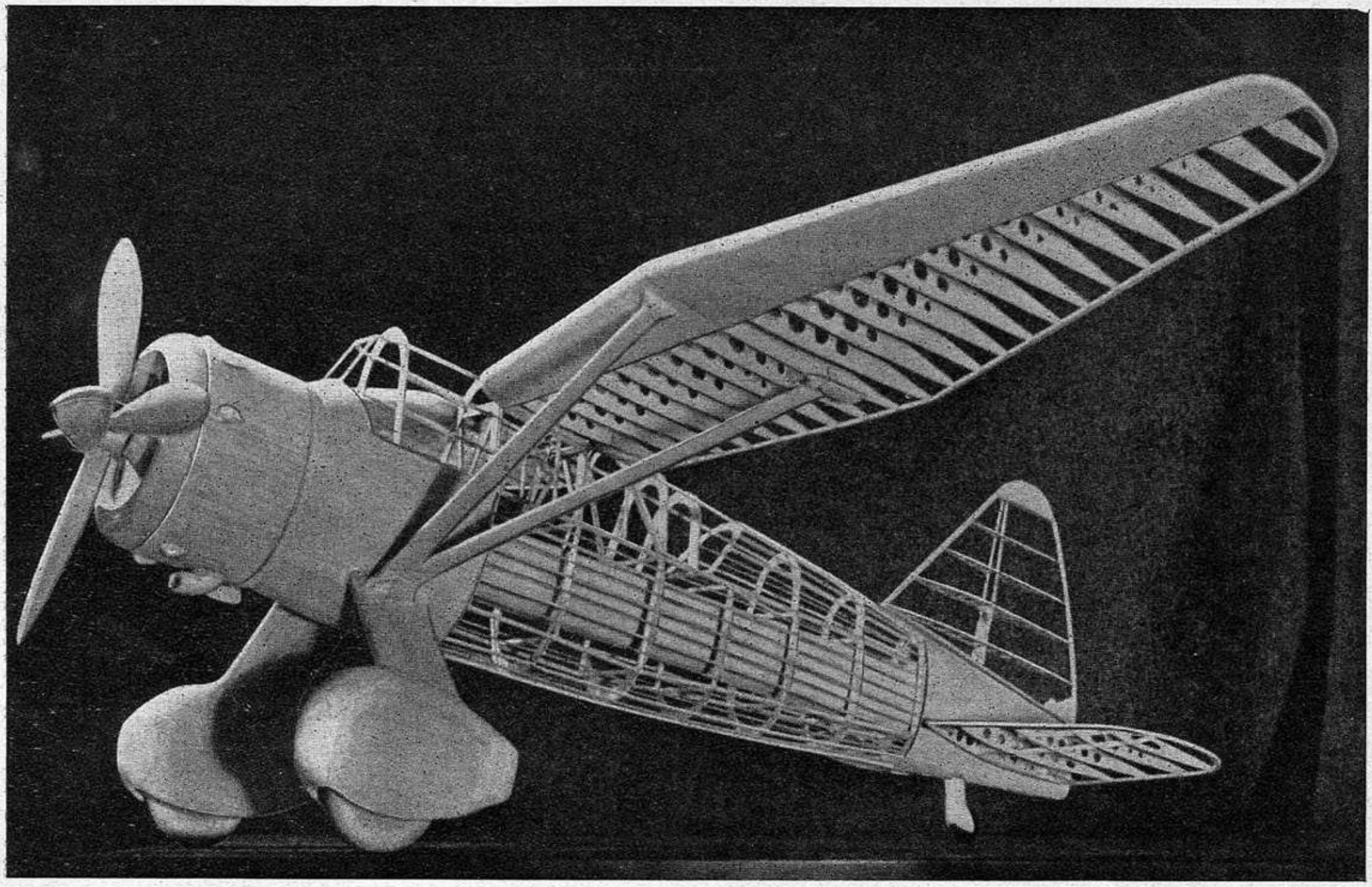

A 50 in. span flying scale model of the Westland "Lysander" built by Mr. Howards Boys. Mr. Boys took this photo and the others which illustrate his chapter on photographing models.

again. With a low-wing model you may find that adding more rubber makes the model fly faster instead of climbing. In that case, try a little more incidence on the wing, or even tilting the propeller up as a last resort. When making adjustments to the wing or tail-plane, always try the model gliding again before winding up. Working this way, you should soon have the model flying properly, but don't get impatient. Keep at it, trying one thing at a time, and you will learn what is wrong. After all, you learn more from a model that is difficult to trim. When launching a model, always send it slightly downwards to begin with at any rate, and follow through with a swinging movement of your arm, to make sure it goes in the right direction. Some people seem to think that if it does not fly very well, by launching it with the wind the wind will help it along. Well, it just doesn't work! The model has to fly through the air at a certain speed to overcome the force of gravity, and it does not matter in what direction the air is travelling. The speed of the model in relation to the ground is different, but you can imagine a model in the air to be like a goldfish in a bowl. If you carry the bowl of water across the room it makes no difference to the speed at which the fish swims. The bowl of water is like the particular square mile of air your model flies in.

CHAPTER XXII

PHOTOGRAPHING MODELS

By HOWARD BOYS

PHOTOGRAPHY is such a universal hobby nowadays that lots of people, having built a model, will want to photograph it. A photograph will still be good years after we have almost forgotten the model, and it is nice to have evidence to show how we have improved.

There are two ways of photographing scale models; one in which the model is made to represent a full-size aircraft by the inclusion of a suitable background, and the other to use a plain background. The writer prefers the latter since in the first method the model merely becomes part of the picture, and can seldom be mistaken for a full-size machine, but in the latter the model *is* the picture, and there is nothing else to distract the attention.

Practically every article written on photography points out the many variables that have to be taken into account, and gives no definite data as regards exposure. The exposure may be given, but not the lighting conditions, which are just as important. The writer has worked out a method that never seems to fail, and hopes to describe it here, so that anyone with a little intelligence can take photographs, similar to those of the Lysander and Swallow shown, with an inexpensive camera.

The camera is not very important, except that a means of giving time exposures is required, and also some means of getting the model in focus at a short distance. Most cameras have a shutter that can be set to give time exposures, and if there is no focussing adjustment a portrait attachment should be used. This portrait attachment must suit the distance at which we shall work, generally about five feet. If small models are being photographed the camera can be used nearer with advantage, but a portrait attachment for five feet will not do for, say, three feet. The camera must be put on something firm, such as a good solid tripod, box or table.

When using the camera as close as this, do not trust the viewfinder too much. The safest way is to sight along the camera and see that it is pointing straight at the model.

The model can be placed on a table, either a plain or polished top will do. For the background we can use a plain distempered wall, a papered wall so long as there is no very obvious pattern, or a plain curtain or blanket. A buff colour, or something near it, is the most useful. The main thing is to have the background as unobtrusive as possible.

We now turn the model about on the table till we find a view that we like. This will generally be a three-quarter rear view from a little above with a low-wing model, and a three-quarter front view from about the level of the table with a high-wing model. Put the camera in place and see that the whole of the model is included in the view, and that the model does not overlap the background.

If we are using a portrait attachment, we must have the camera just the right distance away from the model to suit the attachment. For instance, if the attachment is for five feet the camera must be five feet from the model, and the distance must be measured. Guessing is not good enough. Measure from the camera lens to the fuselage of the model. With a three-quarter front view measure to the leading edge of the wing, and with a three-quarter rear view use the trailing edge. If you are taking a different view, measure to a point a little nearer the camera than the centre of the model. If your portrait attachment is for five feet, and at that distance the model does not nearly fill the picture space, do not worry, because if the negative is sharp, as it will be by working

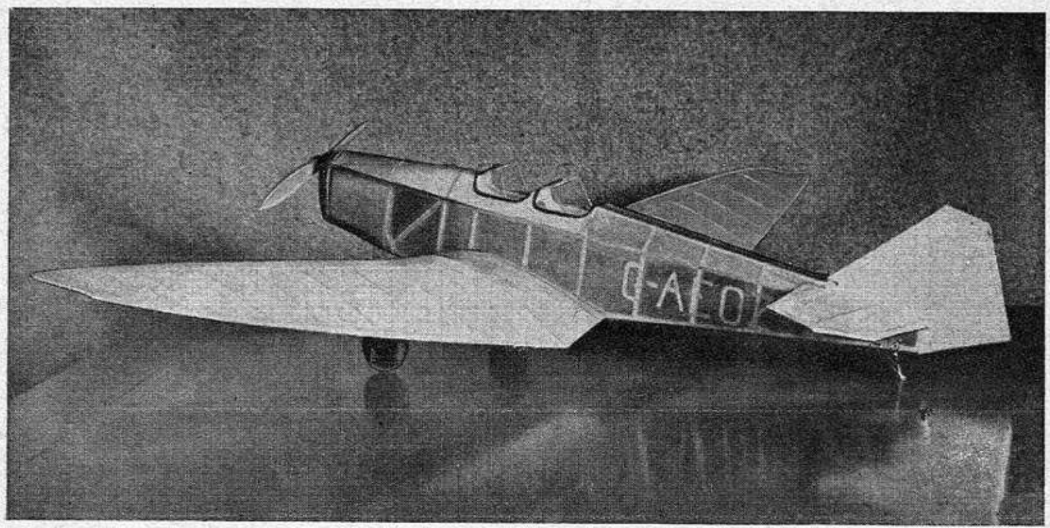

Fig. 77.

at the correct distance, enlargements can always be made. The Swallow and Lysander were no more than an inch long on the negatives, yet exhibition prints 8 in. long have been turned out of the Lysander.

The next job is to arrange the lighting, and this is probably the most interesting part. The best plan is to remove the camera and put a piece of cardboard in its place, with a hole to represent the lens. We can then look through the hole and see the model just as the camera will see it.

For the lights, two or three 100-watt bulbs costing 6d. each can be used, or the more expensive " photofloods." The bulbs are best used with reflectors of some sort, which can be made from sheet tin or thin white cardboard. The writer uses tin ones $10\frac{1}{2}$ in. diameter at the front and $6\frac{1}{2}$ in. long, in the form of a cone. A bayonet socket is fixed in the apex, and a fitting is bolted on to fix it to a tripod or other support. The thing is to be able to adjust the height and move it to the position we find best. One lamp can be used in the ordinary room light, but any shade or reflector should be removed from this, the idea being to get an even light all over the room. With one lamp in its reflector we can move it about to see how it lights up different parts of the model and show them up brightly, and at the same time cast shadows on the background. A good position will be about level with, or just below the camera, and 30 to 45 degrees to one side or the other. This is how the three-quarter rear view of the Swallow was taken. The camera was five feet from the model, and the room light, 100-watt bulb, was about three feet above the camera. A 100-watt bulb in tin reflector was placed about 6 in. below the level of the camera and about 45 degrees to the right. In this position it lit up the fin, side of fuselage, top of near wing, and propeller. By adjusting it a few inches one way or the other, it left the top and bottom of the nose showing dark, due to its curvature. It lit up the inside of the cockpits but left the top of the fuselage dark behind them. The propeller was turned round to find the best position for showing it up. With the nearer blade higher the further blade could not be seen very well, and with the near blade lower it reflected so much light that it was as bright as the fin. The shadow along the leading edge of the starboard wing came along very conveniently all on its own. After sorting out the lighting the camera can be put back in place and the exposure made. Since readers can copy the photograph of the Swallow with their own models, here are the full particulars.

Model.—Silver wings and tail surfaces. Blue fuselage, nose and centre section. Mahogany propeller.

Lighting.—100-watt room light six feet from model, and 100-watt light in tin reflector about 45 degrees to the right, and slightly below the level of the camera.

Exposure.—Two seconds at f.11 on Selo H.P.2 plate. Using Selo H.P.2 film, or Kodak Super-XX, the exposure would be $2\frac{1}{4}$ sec., and, using Panatomic-X, $3\frac{3}{4}$ sec. Using Selo S.F.P. film the exposure would be 15 sec. These exposures should be considered the least you can give to get good results, and you can give up to twice as much without spoiling the picture. Twice as much would even be better if the walls of the room were dark. If you use a paper reflector instead of the tin one, put the lamp at three feet instead of four. The symbol f.11 denotes the diaphragm or " stop " on the lens, and if the camera is a popular cheap one like the No. 2 Brownie you need take no notice of it.

Should the model be dark practically all over, the exposure would need increasing by about 50 to 100 per cent.

Making tin reflectors to fit on tripods may be too much trouble if we do not want to use our photographic apparatus indoors very often, but it is a simple matter to make a reflector out of thin card or thick paper. It can be made from a disc about 18 in. diameter, cut from the edge to the middle, and rolled into a cone, so that we have two thicknesses all round with an overlap about ½ in. wide fastened with a paper clip. We can then make a hole through the side about 3½ in. from the open end, through which we put the brass end of the bulb, with an ordinary bayonet socket on the outside. This " floodlight " can be hung up by its flex. Instead of a tripod, we can use a broomstick tied to a chair. Since a picture can speak louder than words, Fig. 78 shows just how things are set up, with the model in position and the lights in place. Please note that in this picture a shade has been used over the ordinary room light. This was because a light shining on the camera lens may cause a " flare " or bright streak on the photograph. Always see that the lens is in the shade. It may sometimes mean getting a friend to hold up a piece of cardboard or their hand between the lamp and the camera. See that the card is kept outside the picture.

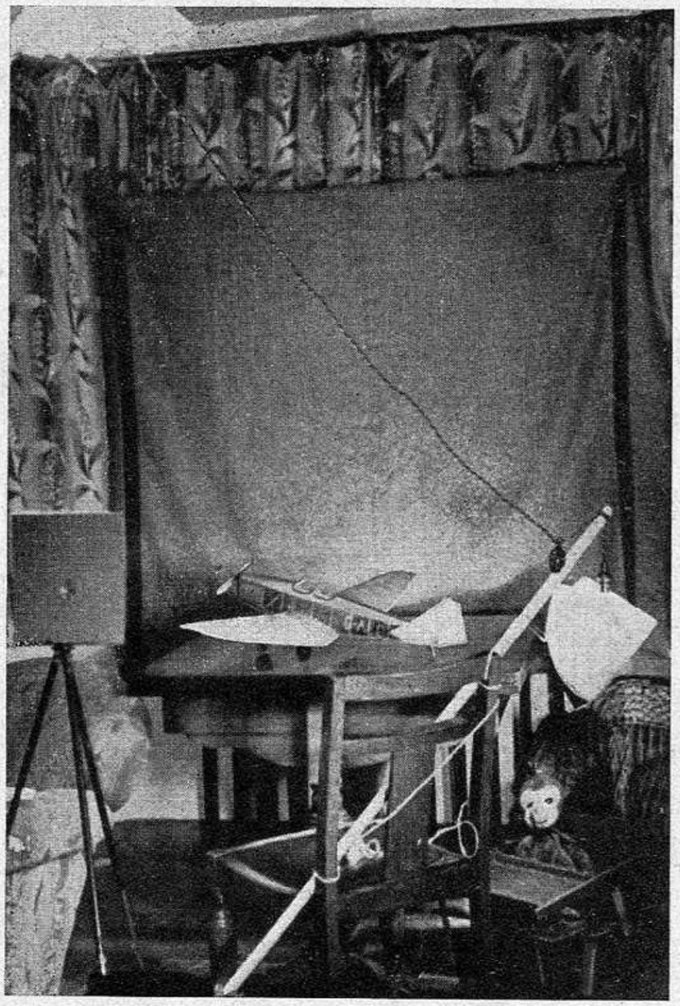

Fig. 78.

Taking the case of a high-wing model, look at the three-quarter front view of the Lysander on page 94. One light was used down low to the right, again to light up the side of the fuselage and pick out the wing-tip and edge of the tailplane. Instead of the room light another bulb in tin reflector was used close up and shining down at about 45 degrees on to the nose. This lit up the leading

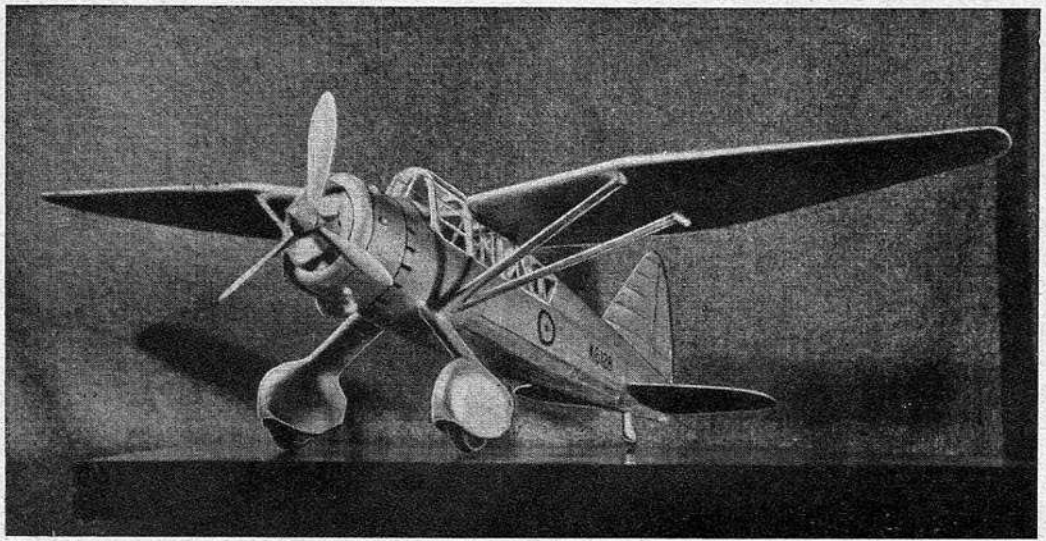

Fig. 79.

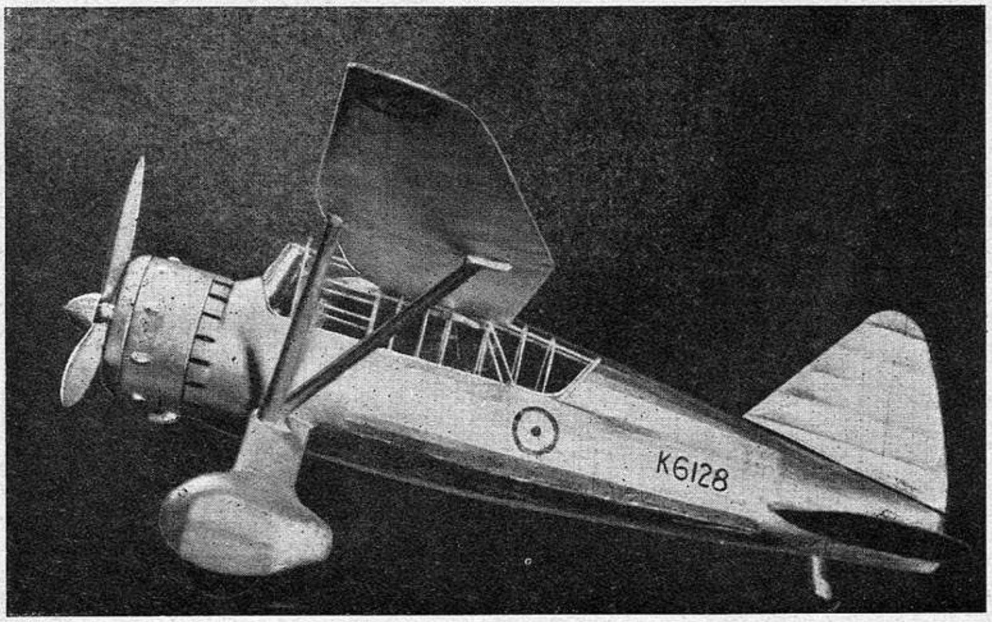

Fig. 80.

edge of the wings, struts, undercarriage and fuselage formers. The lamp to the right was four feet away again, but the one on the left was only three feet away. The exposure was the same as before. The Lysander was silver all over.

This is the general idea of the lighting and exposure used by the writer in most of his photographs of models; it is just varied slightly to pick out certain features. Where a view is a bit more to the side, like Fig. 80, a lamp is often placed a bit on the other side of the model, to show up the rounded top. We can be pretty sure of getting a pleasing result every time by using a general light about four or six feet from the model, with another light about three or four feet away, to pick out spots of high light. In another view of the Lysander, Fig. 81, one lamp was placed a little to the left and just below the camera, to give the general light, and the other lamp was placed round to the right, and higher up, and served mainly to light up the fuselage formers. The position of the lamp on the left was finally chosen where it cast a shadow from the exhaust pipe on to the fuselage. Without working round to that position, the exhaust pipe would not have shown up. Sorting out the lights is very interesting, and the writer usually takes about ten to twenty minutes on the job before being satisfied. It is often best to switch one light off while the most suitable position is found for the other. Sometimes we shall have to stand objects up in front of the lamps so that they cast a shadow on the background.

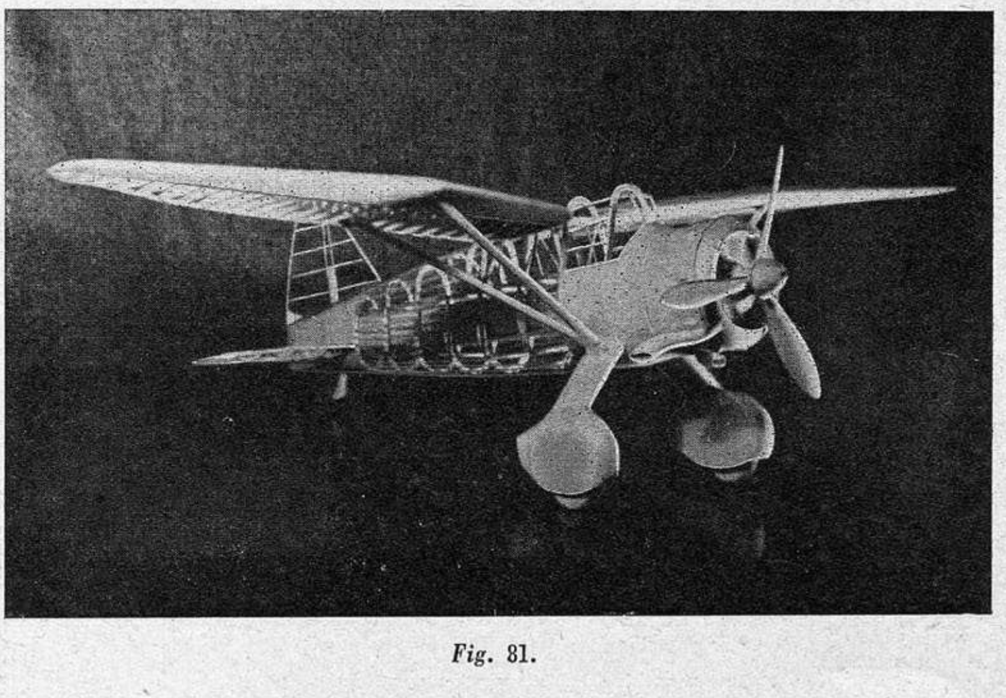

Fig. 81.

As an object lesson on what can be done in arranging lights and shadows, two more photographs are shown with the following notes. Fig. 82 is the first one taken, and shows a model Lysander set up for glueing the tail-plane and fin. We can see that the tail-plane is held in place with glasses and blocks of wood, and we can just distinguish a piece of black thread holding the fin. The tail-wheel shows up beautifully against the edges of the books, but it is not at all obvious that the books

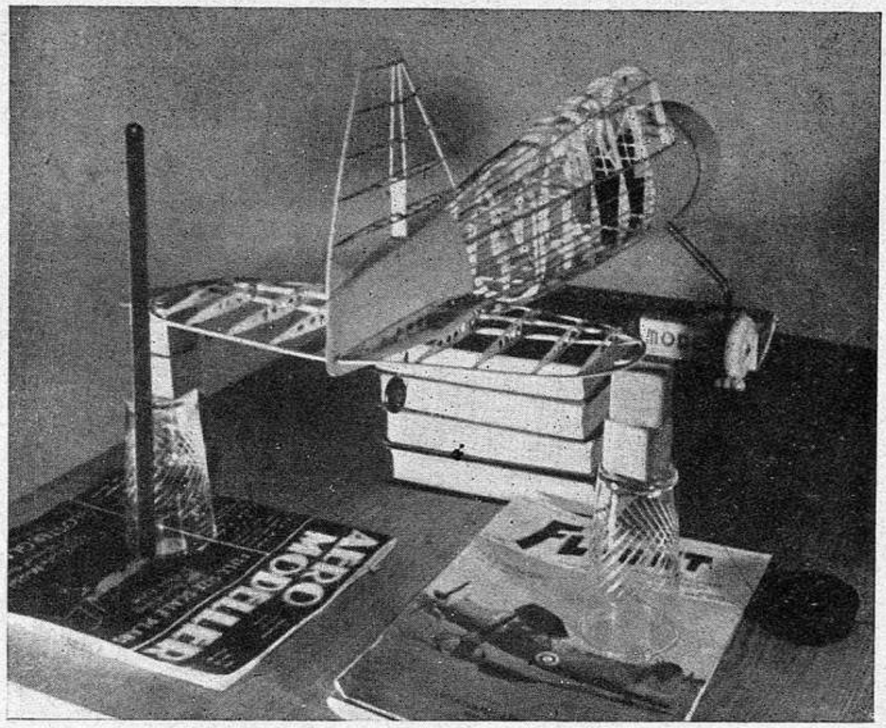

Fig. 82.

are holding up the rear end of the model. Having made a print of that set-up, the writer decided that he could make a clearer picture by re-arranging the lights and fittings. Fig. 83 shows the second attempt, and to get it the writer spent a most instructive and interesting two hours. The first thing to do was to show that the fuselage really was held up, and this was made clear by supporting the tail-wheel. The lights were arranged with one on the right, close up, and one on the left a bit farther away. The right-hand side of the tail-plane was next packed up, using a glass so that there would not be too much shadow about. For the left-hand side a pile of books were used to cast a shadow on the table, under the stern of the fuselage. The books were all placed with their backs to the camera so that the edges of the leaves would not show a blank white space as in the first photograph. Of course, the books chosen were such that if the titles could be read they would give a good impression of the writer's cleverness! White thread was used to hold the fin, since the black had not shown up very well. The light on the right was then moved about to get the best effect. In its final position it cast a shadow from the fuselage on to the wall that passed behind the tip of the fin so that the background would be the darker. This meant moving the whole outfit a bit nearer to the wall. The light on the left was next taken in hand and moved to such a position that it lit up the fuselage formers and tail and fin main spars. The background behind the left side of the tail-plane was a bit light and the tail-plane did not show up very well, so something had to be done about it. A shadow was wanted from the light on the left, so the writer hunted round for something suitable. Eventually the baby's pram was pushed into place, with the baby's dressing gown on the handle. This gave a shadow in just the right place. The exposure was then made in perfect confidence of a satisfactory result. For those who wish to know, the exposure was 2 sec. at f.22 on S.G.Pan plates, using two photoflood lamps in tin reflectors at two and three feet from the stern-post of the model.

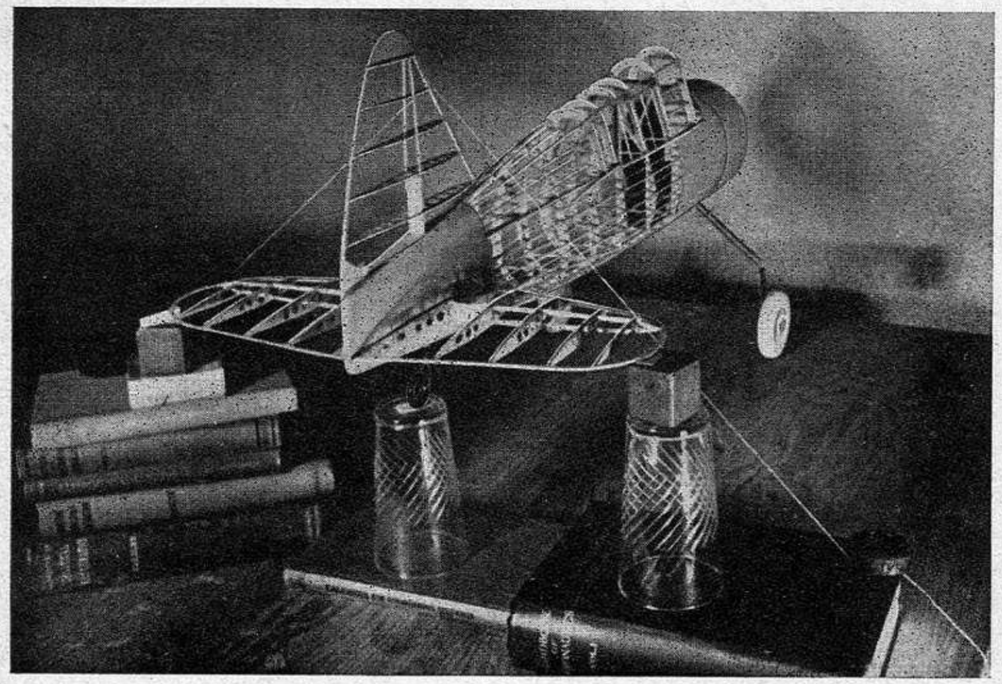

Fig. 83.

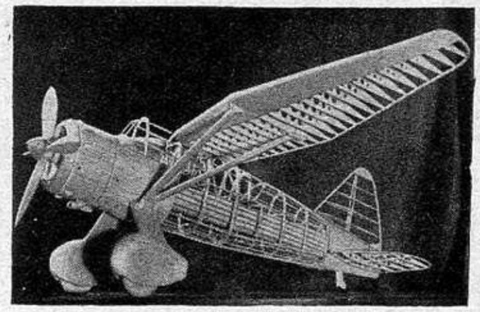

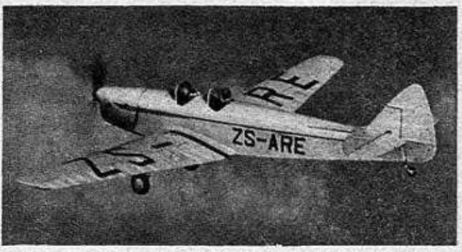

MATERIALS REQUIRED FOR BUILDING

THE T.K.2.

Sheet.
One $\frac{1}{16}$ in. × 2 in. × 36 in. balsa (medium).
One $\frac{1}{32}$ in. × 2 in. × 12 in. balsa (medium).

Block.
5 in. × 1 in. × $\frac{3}{4}$ in. hard balsa for propeller.
One 12 in. × $\frac{1}{2}$ in. × $\frac{3}{4}$ in. soft balsa for fillets, tail blocks, etc.
One 12 in. × $\frac{1}{8}$ in. × $\frac{1}{2}$ in. medium.

Strip.
One $\frac{1}{8}$ in. square by 18 in. medium.

Bamboo.
6 ft. of $\frac{1}{16}$ in. square by 12 in., for stringers.

Tube.
1 in. 20 s.w.g. brass. Length of 20 s.w.g. wire.

Rubber.
6 yards of $\frac{1}{8}$ in. flat.

Sundries.
Tube of cement. One sheet of white tissue.
Small bottle of clear dope. Two $\frac{3}{4}$ in. dia. wheels.
Drinking straw. Used negative or cellophane.
Strip of thin aluminium.

THE GLOSTER "GLADIATOR."

Sheet.
One length of $\frac{1}{16}$ in. × 3 in. × 3 ft. (ribs, formers).
One length of 1/64 in. × 2 in. × 3 ft.

Strip (all 3 ft. lengths).
Four lengths of $\frac{1}{16}$ in. square balsa strip (longerons, etc.).
Two lengths of $\frac{1}{8}$ in. square balsa strip (leading-edge, etc.).
Two lengths of $\frac{1}{8}$ in. × $\frac{1}{16}$ in. balsa strip (spars, etc.).

Sundry pieces of small block balsa for details, etc.
One length of $\frac{1}{8}$ in. diameter reed, for exhausts.
One pair of celluloid wheels, $1\frac{1}{2}$ in. diameter.
One small wheel for tail.
2 ft. of 18 s.w.g. piano wire.
Block of balsa, $\frac{1}{2}$ in. × $1\frac{1}{4}$ in. × $6\frac{1}{2}$ in. (propeller).
Thin card for cowling. Thread for bracing.
Two sheets silver tissue. Piece of cellophane.
One bottle of dope. 6 ft of $\frac{1}{8}$ in. flat rubber.
One tube of cement. Tin tissue paste.
Nose bush to fit 18 s.w.g. wire.

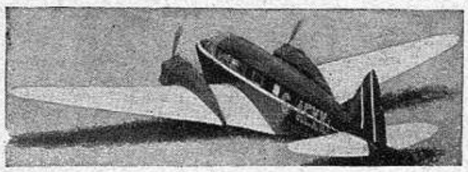

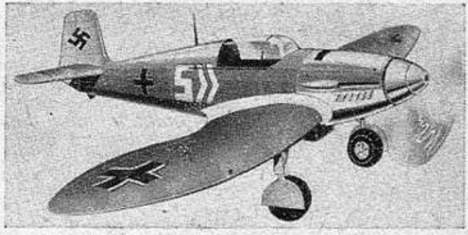

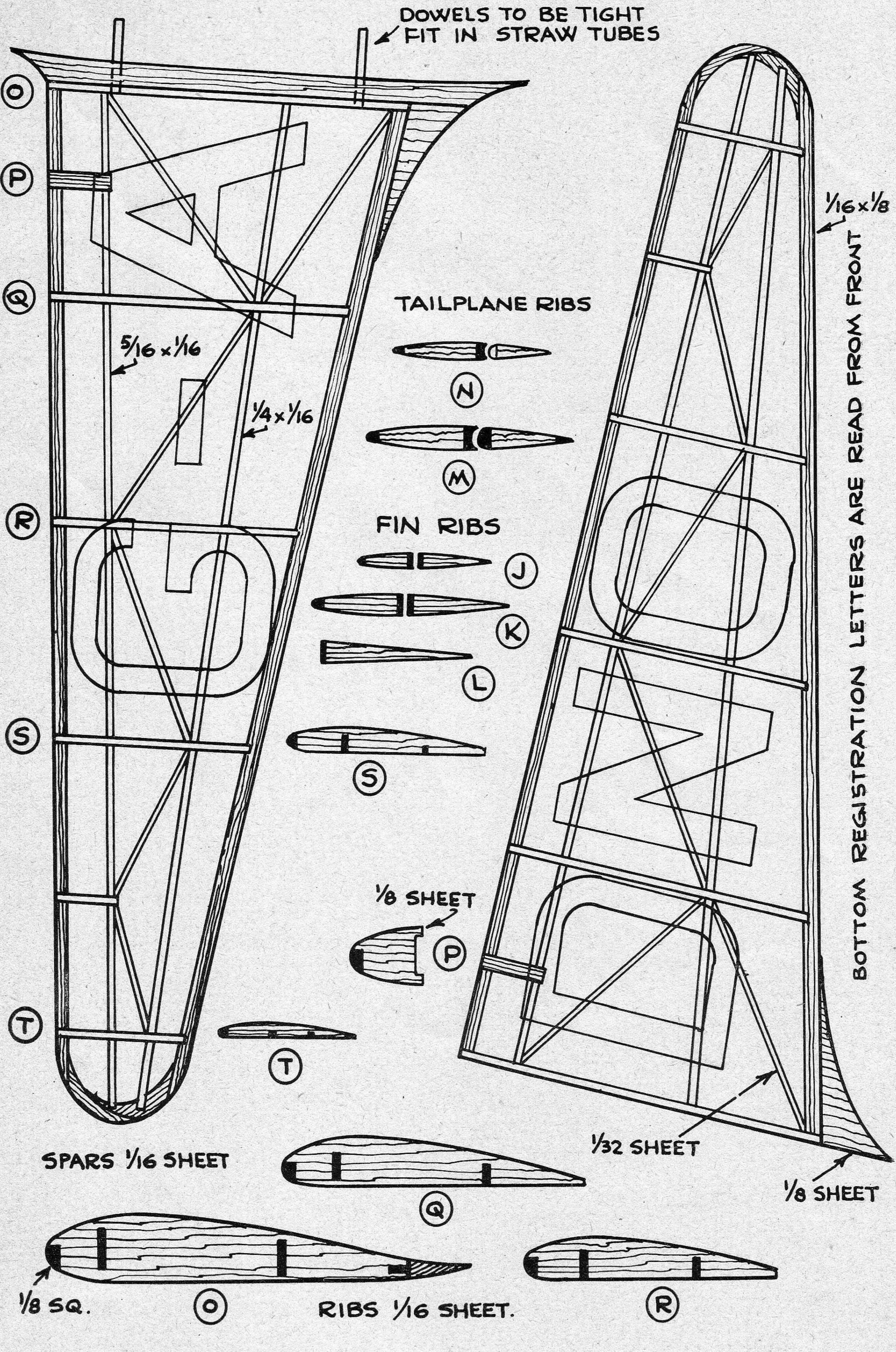
DOWELS TO BE TIGHT FIT IN STRAW TUBES
O
P
Q
R
S
T
5/16 x 1/16
1/4 x 1/16
TAILPLANE RIBS
N
M
FIN RIBS
J
K
L
S
1/8 SHEET
P
T
1/16 x 1/8
BOTTOM REGISTRATION LETTERS ARE READ FROM FRONT
1/32 SHEET
1/8 SHEET
SPARS 1/16 SHEET
Q
1/8 SQ.
O
RIBS 1/16 SHEET.
R

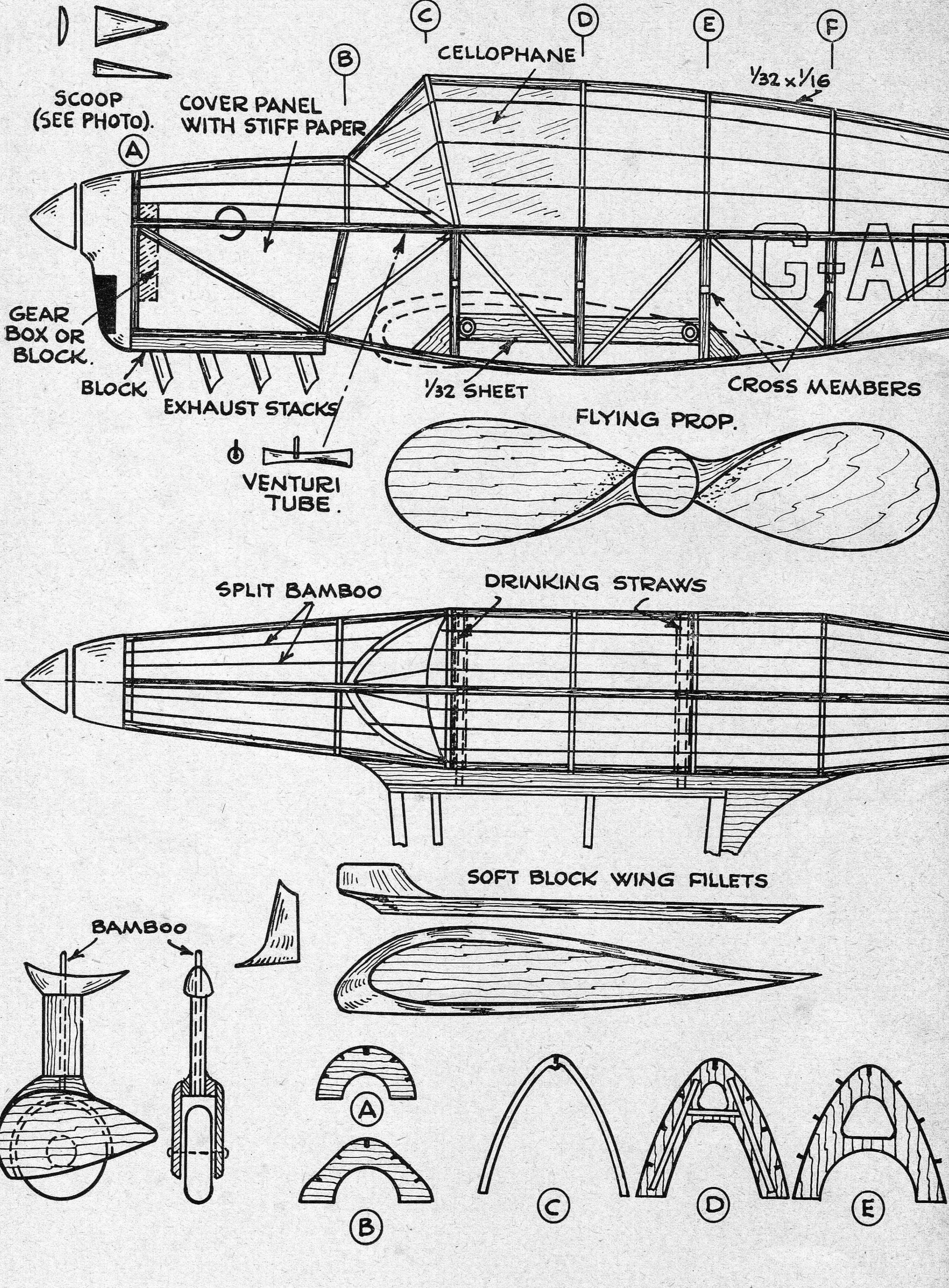
SCOOP (SEE PHOTO).
Ⓐ
Ⓑ
Ⓒ
Ⓓ
Ⓔ
Ⓕ
COVER PANEL WITH STIFF PAPER
CELLOPHANE
1/32 x 1/16
G-AD
GEAR BOX OR BLOCK.
BLOCK
EXHAUST STACKS
1/32 SHEET
CROSS MEMBERS
VENTURI TUBE.
FLYING PROP.
SPLIT BAMBOO
DRINKING STRAWS
SOFT BLOCK WING FILLETS
BAMBOO
Ⓐ
Ⓑ
Ⓒ
Ⓓ
Ⓔ

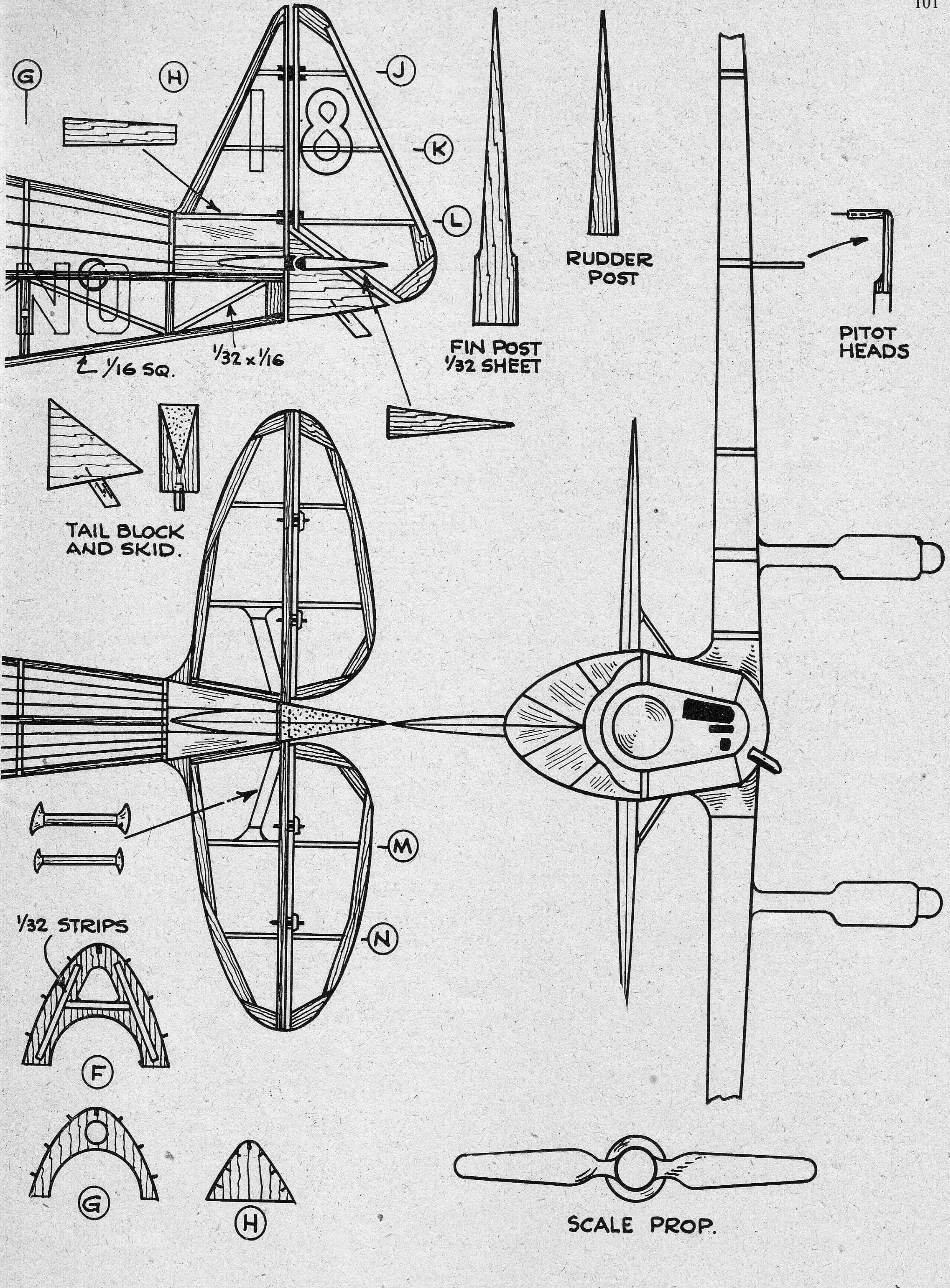
G
H
J
18
K
L
NO
1/16 SQ.
1/32 x 1/16
FIN POST
1/32 SHEET
RUDDER
POST
PITOT
HEADS
TAIL BLOCK
AND SKID.
M
N
1/32 STRIPS
F
G
H
SCALE PROP.

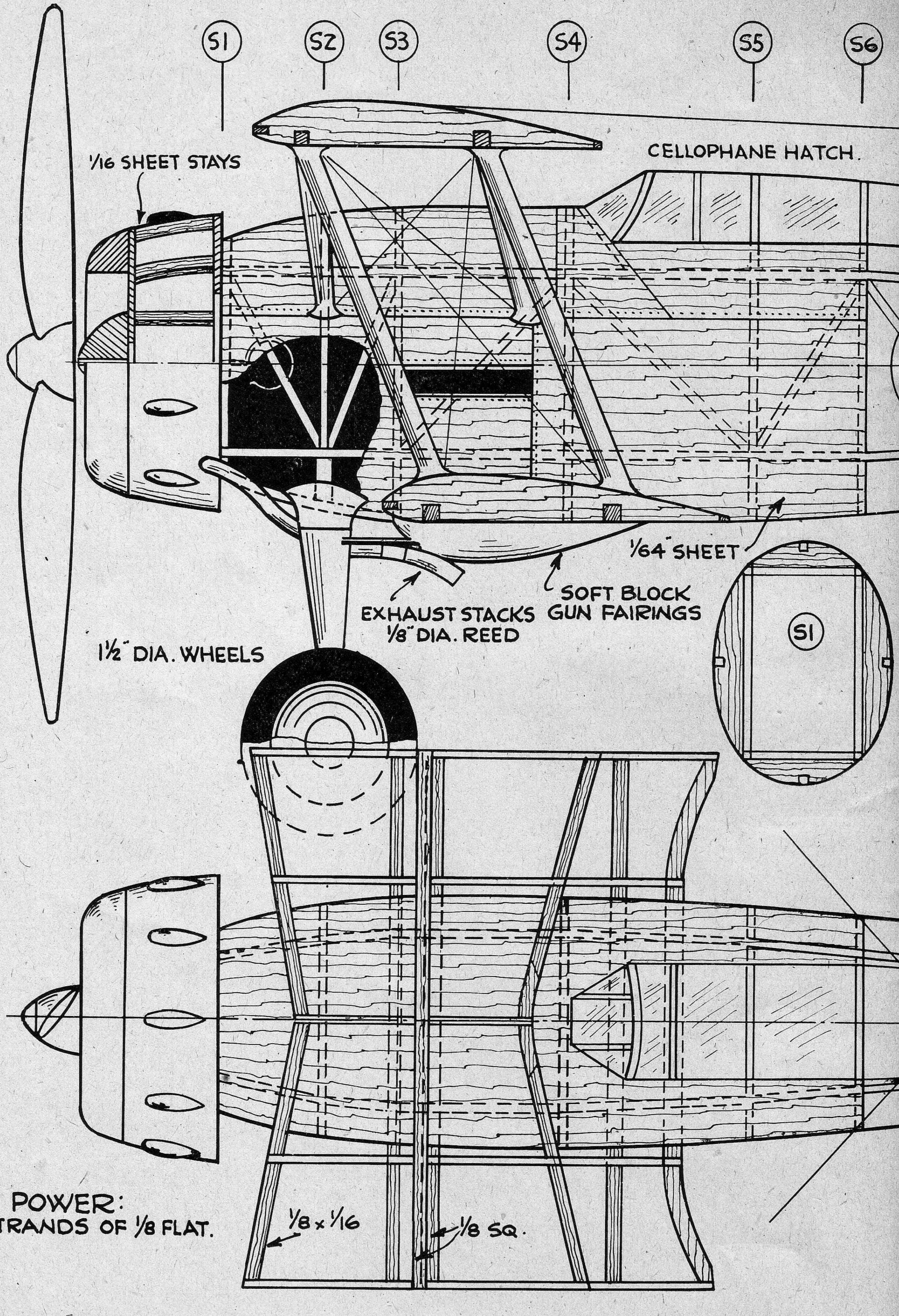
S1
S2
S3
S4
S5
S6
1/16 SHEET STAYS
CELLOPHANE HATCH.
1/64" SHEET
SOFT BLOCK
GUN FAIRINGS
EXHAUST STACKS
1/8" DIA. REED
1½" DIA. WHEELS
S1
POWER:
6. STRANDS OF 1/8 FLAT.
1/8 x 1/16
1/8 SQ.

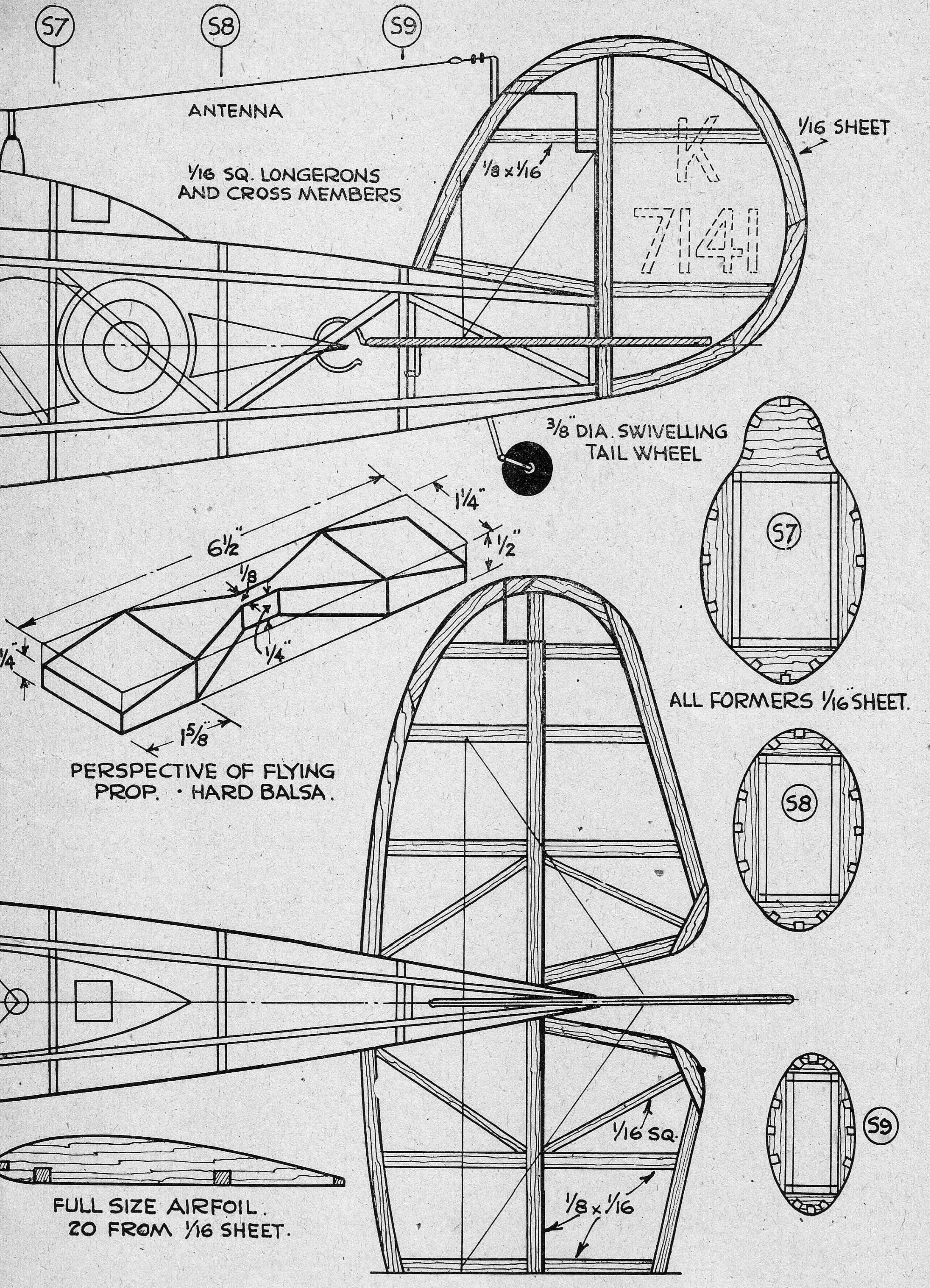

PERSPECTIVE OF FLYING PROP. · HARD BALSA.

FULL SIZE AIRFOIL. 20 FROM 1/16 SHEET.

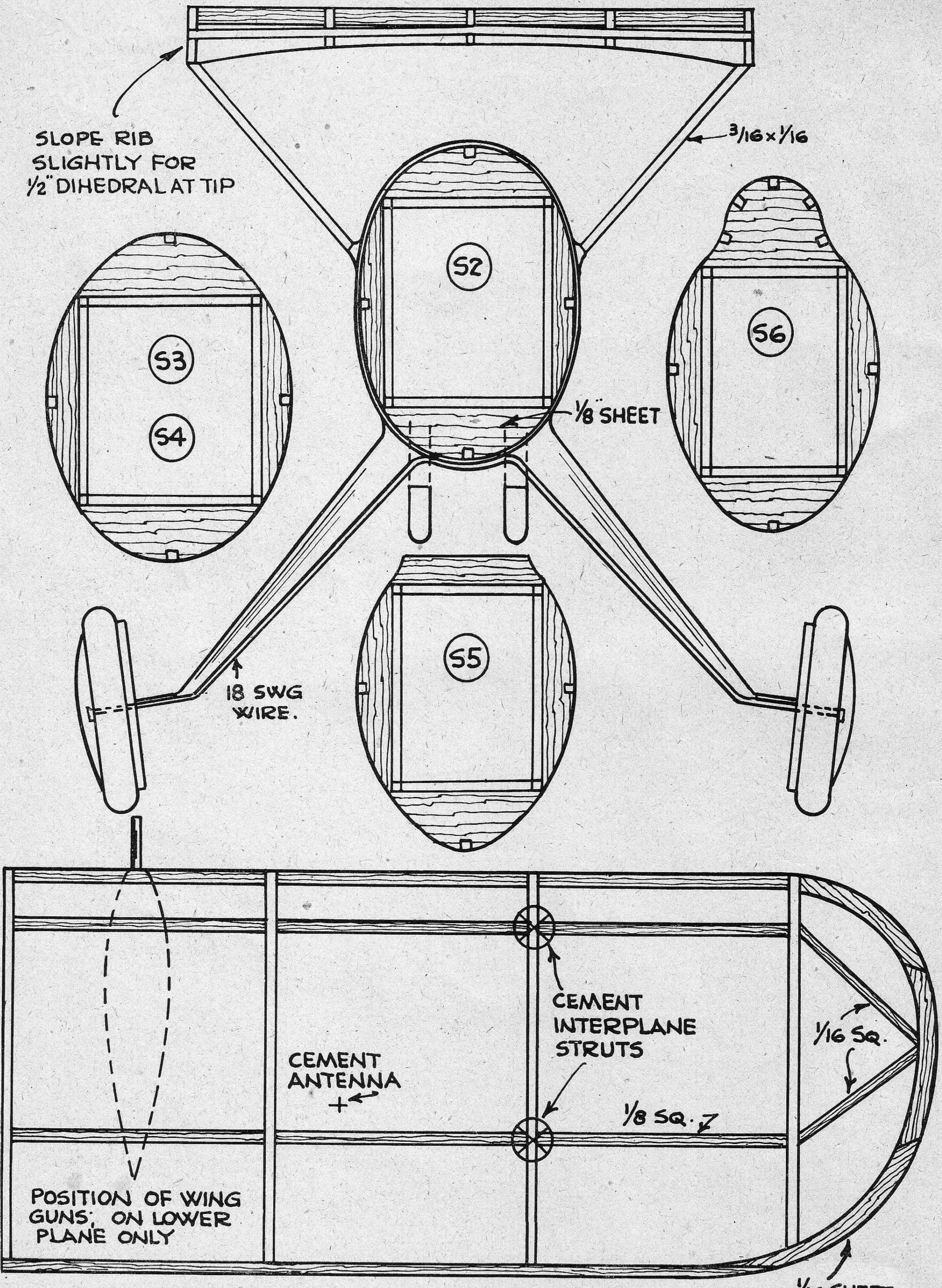

MAKE 2 WING PANELS TO THIS DRAWING AND 2 REVERSE.

HARBOROUGH BOOKS

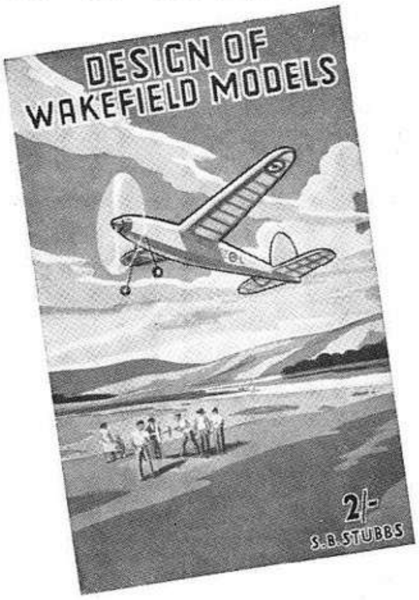

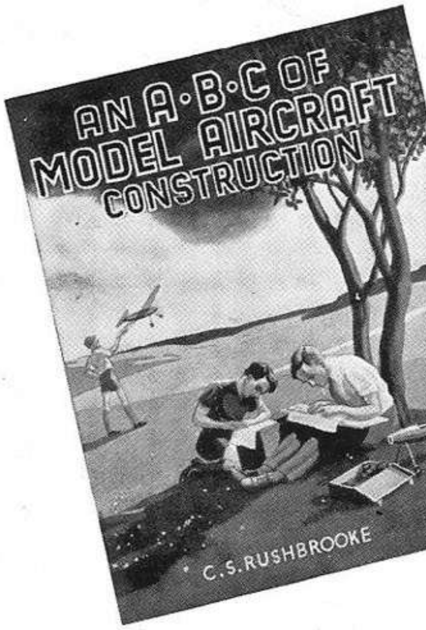

WHICH OF THESE ARE MISSING FROM YOUR COLLECTION?

The Harborough Publishing
Company Limited
Allen House, Newarke Street
Leicester


PRICE 12/6
AIRCRAFT OF THE FIGHTING POWERS