THE MODEL AEROPLANE MANUAL by L.H. SPAREY C.A. RIPPON

7/6

THE MODEL AEROPLANE MANUAL

THE COMPLETE GUIDE TO BUILDING AND FLYING.

By L.H. SPAREY & C.A. RIPPON

ERCIVAL MARSHALL & CO. LTD. MAIDENHEAD

7/6

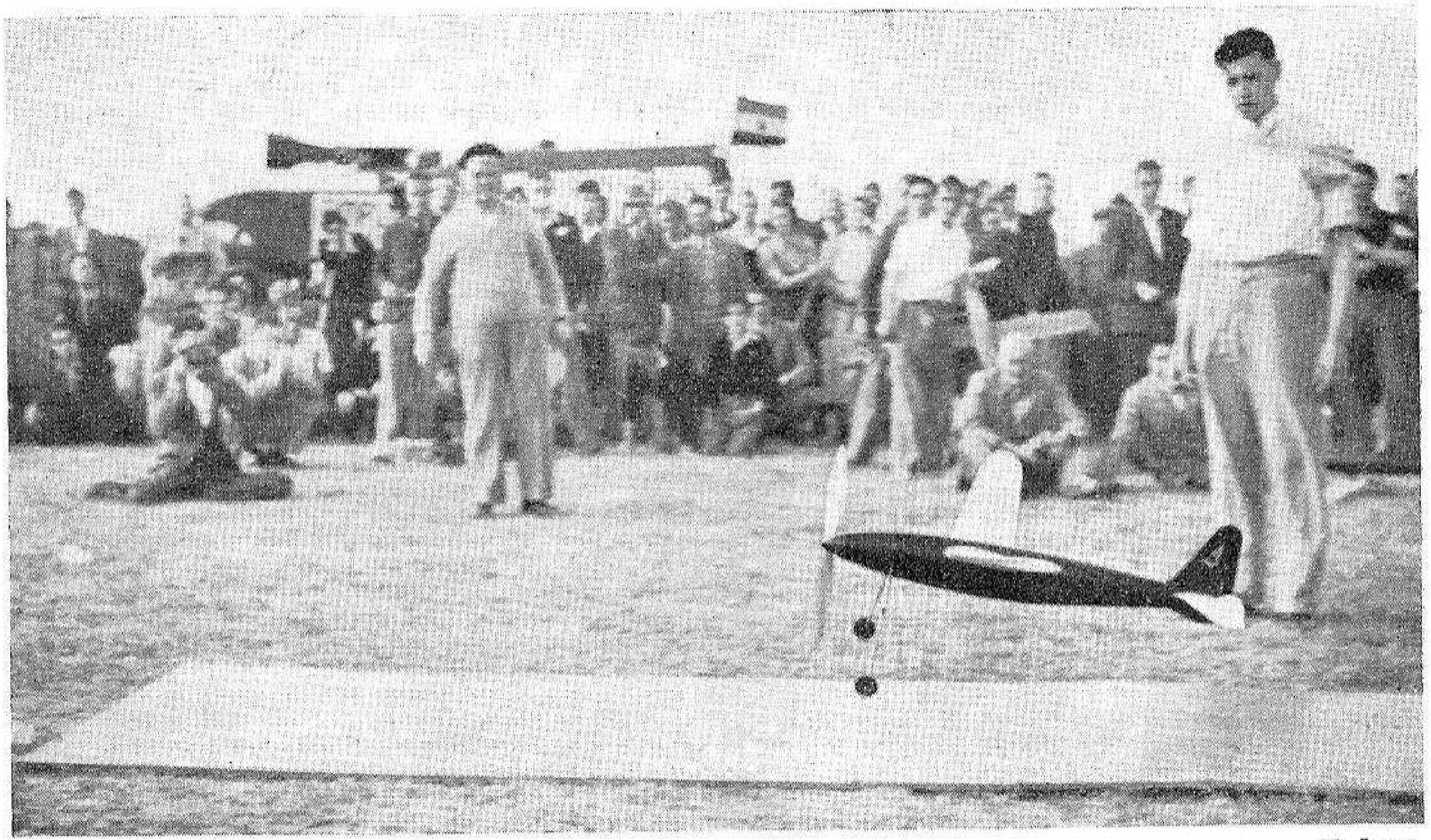

Photo by courtesy] [*I. Lucas*

"AIRBORNE"

The "G.B. 3," holder of the British and World's model aeroplane duration record, leaving the take-off board

THE
MODEL AEROPLANE MANUAL

A Practical Handbook on the
Building and Flying of Model Aeroplanes

Third Edition

By LAWRENCE H. SPAREY
and CHARLES A. RIPPON

with a Preface by
A. P. THURSTON, D.Sc., M.I.Mech.E., F.R.Ae.S., M.I.A.E.

PERCIVAL MARSHALL & CO., Ltd.,
London and Maidenhead

CONTENTS

Made and printed in Great Britain by
ELECTRICAL PRESS LTD., LONDON AND MAIDENHEAD

PREFACE

By A. P. THURSTON,
D.Sc., M.I.Mech.E., F.R.Ae.S., M.I.A.E.

WHEN Benjamin Franklin made his world-famous experiments on atmospheric electricity by flying a kite in a thunder storm, he found it necessary to shield himself from public ridicule by taking a small boy to help him fly the kite, because public opinion at that time considered kite-flying beneath a man's dignity. In our own time, enthusiastic aeromodellists have for similar reasons occasionally been glad of the company of somebody more youthful than themselves. No doubt critics of the sport are misled by its cheapness, and do not realise that the closeness of approach obtainable in all respects to the " real thing " is out of all proportion to the modest outlay involved.

The pleasure of building and experimenting with flying models is keenest when supplemented by sound technical information, and the practical knowledge of aeronautics so acquired will not only enable the ordinary man to keep abreast of the times, but will give the requisite stimulus to those few who may be especially talented in this direction. In fact, many of our leading aeroplane designers and manufacturers have graduated from the ranks of aeromodellists, and still retain a keen interest in the welfare of the sport. Aeromodellists may truly be said to form the connecting link between the select band of trained aeronautical specialists of to-day and the mass of everyday people who will shortly be using aviation as they now use motor transport.

The best book on Aeromodels which I have ever read is the " Model Aeroplane Manual," written by Mr. Lawrence H. Sparey and Mr. Charles A. Rippon, which appears to be one of the most comprehensive and serious surveys of the subject yet published in this country.

This book will undoubtedly prove of real help and service to aeromodellists—the ideas and constructions shown or described appear to be sound in theory and to have been tested and proved in practice.

I confidently recommend this publication to all interested in model aeronautics.

A. P. THURSTON.

AUTHORS' NOTE TO THIRD EDITION

"THE Model Aeroplane Manual" was originally written to be a guide to the beginner and mid-stage builder, and the excellent reception which the previous editions of this book has received has persuaded us that it has, at least, attained its object.

In this third edition the book remains of a similar nature, yet, in order that it may still remain a guide to the very latest advances and methods of model aeroplane building, certain portions of the book have been rewritten. Nevertheless, it has not been fundamentally altered, for, however much methods may change, the principles of model aeronautics remain the same.

Some advanced matter, which was considered to be out of place in such a volume, has been removed ; much new information has been added, and designs for new, up-to-date machines have been incorporated. These include the World's Official Duration Record Holder, "G.B.3," and the British Glider Record Holder, "The Twenty-minute Glider." These machines, in themselves, are lessons in the newest technique.

Technique, however, is only the outcome of skill and experience, and it is hoped that this latest edition of this book may continue to provide the basic knowledge upon which your own technique may be founded.

LAWRENCE H. SPAREY,
CHARLES A. RIPPON.

THE
Model Aeroplane Manual

CHAPTER I

THE PROBLEM

It is essential to the success of any undertaking that it must first be understood just what it is one wishes to do. The artist who would paint a masterpiece must have clearly in mind the precise effect he would convey, and however skilled he may be in the use of his materials, the result will fall short of perfection if his aim has not been clearly defined.

In the making of model aeroplanes, this principle in no way varies, and the successful aeromodellist is the one that understands just how his arrangements of wood and paper and wire will function when in action. Let us see, therefore, if we can define, in as simple and non-technical a manner as possible, the principles of this most fascinating hobby.

So long ago as 1809, Sir George Caley, who has been described as " the Father of British Aeronautics," correctly defined the problem of mechanical flight as being :—" To make a surface support a given weight by the application of power to the resistance of air," and the whole of the technique of aeronautics centres around this proposition.

Everyone knows that an aeroplane has wings. It also has many other things, but it is the wings which enable an aeroplane to rise into the air, and differentiate it from less fortunate, earth-bound means of transport. It is also a commonplace that an aeroplane must have forward speed —or a forward speed relative to the air—before it will rise. How is it then, that this motion, when applied to a wing, can counteract the force of gravity ?

Any flat plate, when held at an acute angle to the airflow, is a wing, and its action is not difficult to understand. In Fig. 1 is shown such a plate, which, we will imagine, is being moved through the air. Now, air has weight (14 cubic feet weigh one pound), and consequently inertia, which means that it will resist change of movement. Our moving plate will tend to push the air below the leading edge, in a downward direction, or alternatively, the plate in an upward direction. It is easy to see that the faster our plate is moved the greater will be the resistance of the displaced air—which cannot get out of the way quickly enough—and the greater will be the tendency of the plate to move upwards.

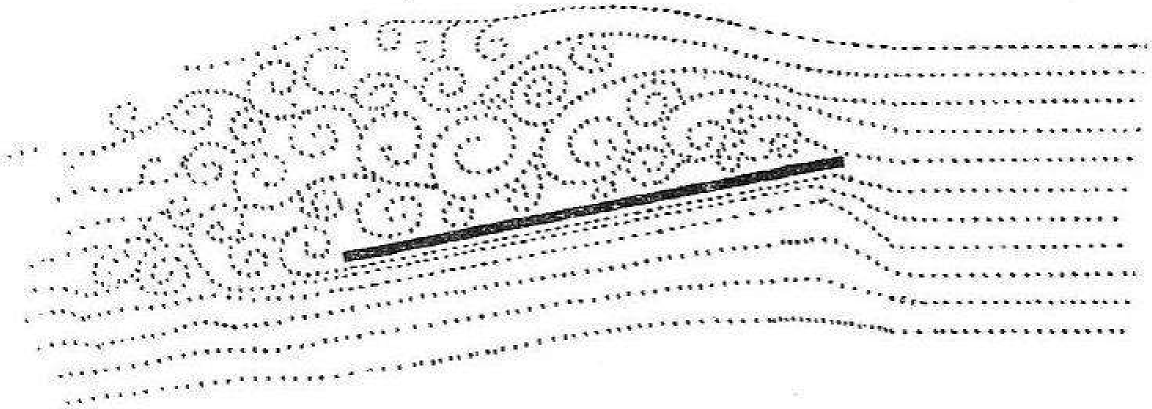

Fig. 1

Now this would be an ideal condition, and the theory of the wing settled, were it not for the behaviour of the air above and behind the moving plate. The air in these regions is a mass of swirling eddies, which have a very bad effect on the plate as a wing—in certain conditions destroying the lift altogether.

It now remains, therefore, to alter the section of the plate in such a manner that the air will be disturbed as little as possible, and will tend to resume its natural, steady flow without undue commotion. We now arrive, in Fig. 2, at a section typical of a modern aerofoil, where the air streams naturally over and under the surfaces, and eddy currents are reduced to a minimum. We can thus take full advantage of the upward push given to our wing from below, but this is only half the story, for we now find, on examination, that by curving the top surface in this manner, a new and highly important factor arises. It is now possible to obtain lift from the *top* of the wing!

On first glancing at the aerofoil section in Fig. 2, it would seem that the curved portion at "A" would be acted upon in a *downward* manner by the airflow, and therefore, a retrograde step had been taken in our search for maximum lift. Let us consider this more closely. The airflow striking the aerofoil is divided into two streams, one flowing above and the other below, and reuniting beyond the trailing edge. A little thought will show us that the air over the curved top surface must travel a longer distance than the air along the lower surface, and must therefore move more quickly if it is to unite at the trailing edge at the same moment. This increase of speed, means that the faster moving air will press more lightly on the wing top than the slower moving air will press beneath, and will thus impart a lift to the top surface.

This action is well known, and is utilized in such articles as scent-sprays and cellulose spraying guns, where a fast moving stream of air passing over the top of a tube exerts sufficient lift to raise liquids.

The reader may conduct a simple experiment to demonstrate this principle. Fig. 3 represents a sheet of writing paper, one end of which is bent at right angles to form a hinge; the free end being roughly curved to represent an aerofoil. On holding the hinged portion in the hand, and blowing across the paper in the direction indicated by the arrow, it will be found, that instead of being blown downwards as would be expected, the free end of the paper will rise.

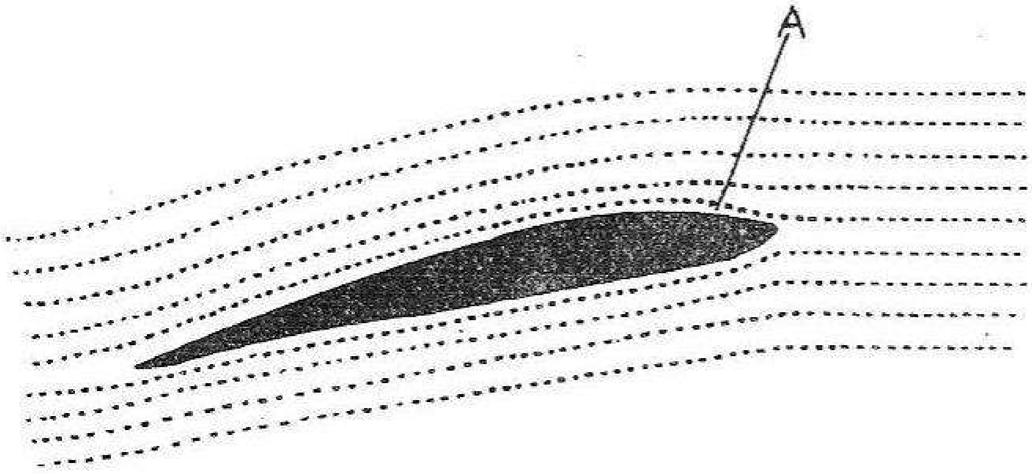

Fig. 2

Except for small eddy currents caused by skin friction, our wing is now in an ideal condition to supply the lift, but, things being what they are, we must look for the inevitable snag. This lies in the fact that our wing is only ideal when meeting the airflow at a certain angle of incidence ; any change in this making it increasingly difficult for the air to follow smoothly the contour of the surfaces, until, at the exaggerated angle of incidence shown in Fig. 4, we are back again to the same problem which we encountered with our flat plate in Fig. 1. This condition is known as "stalling," and presents one of the greatest problems of aviation.

The importance of skin friction on the behaviour of a wing is very great. The term "skin friction" is used to describe the behaviour of the air at the surfaces of an aerofoil or other moving body. A thin "layer" of air will "stick" to the aerofoil surfaces, just as a thin "layer" of water will "stick" to the hand if it is immersed and withdrawn. The air in contact with this first layer will also tend to adhere, and small eddy currents are set up which break and roll over each other in the manner of waves upon a sea shore. When the wing is moving through the air in a normal manner, and the airflow is streaming naturally past, these small eddies are blown away, and no harm is done beyond the drag or resistance which they cause. If, however, the wing's angle of attack becomes so great that the airflow "breaks away," the restraining influence upon the small skin friction eddies is removed, and they begin to build-up in the manner shown in Fig. 4.

Various methods and contrivances have been evolved to overcome or minimise these difficulties, but for the model builder the only solution is to use an aerofoil which allows a certain latitude of incidence without the airstream becoming "unstuck," and to design his machines to be automatically stable in a longitudinal direction. In other words, some form of stabiliser must be used which will prevent the

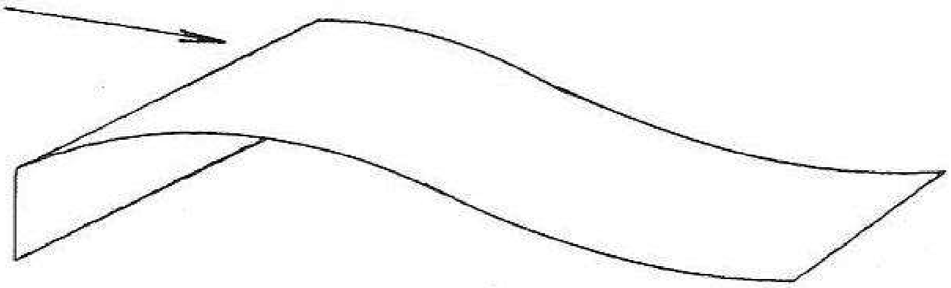

Fig. 3

machine from assuming too great an angle of attack. Wing surfaces must be kept as smooth as possible to lessen the effects of skin friction drag and turbulence.

These questions will be dealt with as they arise; meanwhile we can deduce that the whole problem of model aeronautics is as follows :—

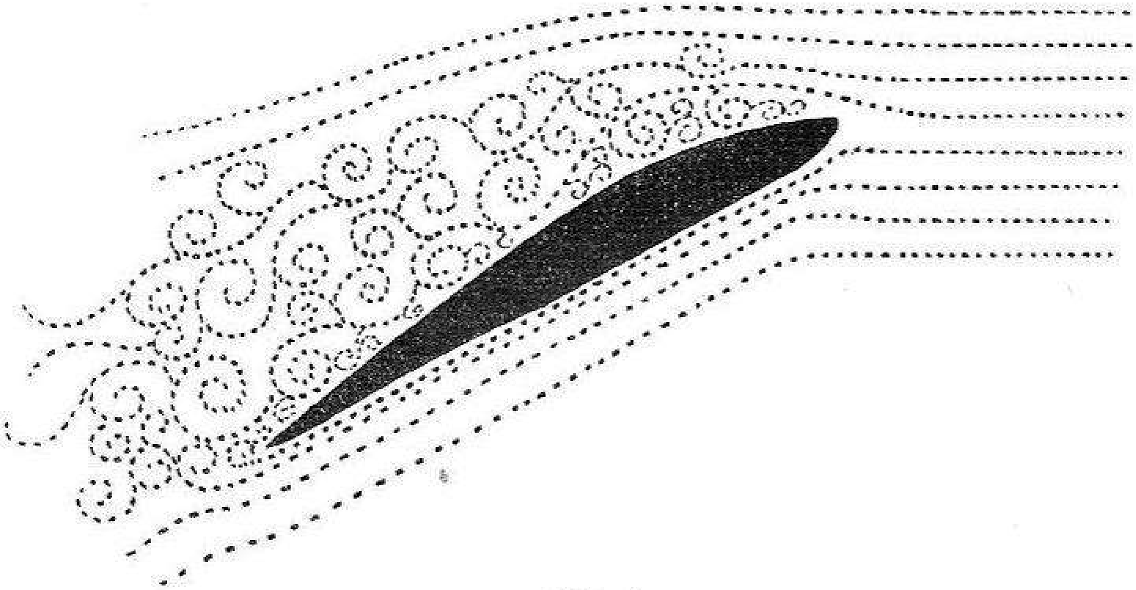

Fig. 4

1. To build a wing that will lift.
2. To provide that wing with forward motion through the air.
3. To provide methods of stabilising that wing in all directions.

With these aims clearly in mind, let us devote ourselves to their achievement.

CHAPTER II

MATERIALS

Before proceeding to the design and construction of model aircraft, it seems reasonable to examine the substances from which our models will be made. Strictly speaking, there is no limit to the materials which may be utilised, in so far as it is highly desirable to be on the look out for substances, hitherto overlooked, which may be suitable for certain purposes. It is one of the chief joys of the aeromodellist that his hobby offers more scope for experiment than most others, and the use of materials in no wise departs from this tenet. However, like all experiments, these must be of a reasonable nature, and the beginner is advised to stick to the orthodox at first.

Balsa

Probably the most useful material at the disposal of the model builder is *Balsa Wood*, and it is no exaggeration to say that its introduction into model aeronautics has revolutionised the pastime. Balsa wood was first used in America, and was forcibly brought to the notice of English model builders when an American all-balsa machine won the Wakefield International Cup in 1930. English model makers quickly discerned the possibilities of this substance, and since that time the use of balsa has become increasingly popular in this country, while in America, it can be safely said, it has ousted all competitors—even heavy, petrol-driven models being entirely constructed of balsa wood. The American climatic conditions seem to be extremely favourable to model flyers, but in the British Isles, unfortunately, our particular brand of weather subjects the use of balsa to some limitations. The English builder will be well advised to bear in mind that balsa is a very short-grained wood, and it is inadvisable to use it in any highly stressed part of a model of six ounces weight or over, without recourse to strengthening agents such as silver spruce or birch. Balsa is also very prone to absorb moisture and rubber lubricant, but may be protected by a coat of cellulose lacquer or cement.

Nevertheless, this remarkable substance is of the utmost importance in model aeroplane building by reason of its light weight, as it is six times lighter than spruce. Besides this most valuable asset, it is easily worked and lends itself readily to almost every purpose where wood can be used in a model. Balsa wood is used commercially for sound-proofing, insulating, and in boat and aeroplane construction, and comes from South America, where it grows wild in the dense tropical forests. It has recently been cultivated also, and as a balsa tree will attain a girth of nine feet in five years it must form a very curious branch of forestry.

There are several kinds of balsa wood obtainable for model work, ranging from the soft variety which is of a very spongy nature, to the hard type which is of good toughness and strength. Unfortunately, the weight of balsa varies with the toughness, which, in turn, determines the strength. The ultra-soft variety is so fragile as to be almost useless for model purposes, but, on the other hand, the very hard kind, though possessing ample strength, is almost as heavy as ordinary "hard" woods. The best variety for our purpose is the *medium hard* balsa, which possesses considerable strength at the same time retaining its desirable lightness.

Balsa wood is now available in many sections specially prepared for model aeroplane use. In Fig. 5 some of these sections are represented, with a note as to some suitable purposes to which they may be put. It is also obtainable in sheets, in thicknesses from 1/64th inch upwards, and in blocks up to quite large sizes, from which such things as wheels, spats, noseblocks and a variety of similar components may be carved. It is here that the advantages of balsa are readily discernible, as quite a large amount may be used without great increase in weight. For flying scale models it is invaluable for use in the many trimmings which a scale model must possess.

Spruce

Leaving this most valuable substance—balsa wood, we will now turn our attention to other woods which are of great use to the aeromodellist. Next to balsa, *Silver Spruce* is probably of the greatest value, being light and extremely tough and strong. It is used extensively in the manufacture of full-sized aeroplanes, and is of great utility to the aeromodellist for the heavier types of model. One of its greatest virtues is that it may be easily steamed to mild curves, a process to which balsa does not readily submit. Spruce may be used for fuselage longerons, bracing struts and for wing spars, and is usually sold in lengths of square or rectangular section, although similar sections to those shown for balsa may be obtained from some dealers.

Birch

This is another wood much favoured by the devotees of the heavier type of machine. It is stronger than silver spruce but also heavier, and its uses are similar to those of spruce. It may be readily steamed to acute curves, and may be employed in cases where extreme strength is required, as in the construction of power models and heavy rubber-driven machines. As an example of what can be done by a judicious use of materials, the writer has in his possession a wing of 36 inches span and 5 inches chord, built with twenty-four balsa ribs and five 1/16th inch by 1/16th inch square section birch spars, covered with silk with three coats of dope, the total weight of which is one and one quarter ounces. This wing has seen plenty of service and is extremely strong and true.

Basswood

This wood has been extensively employed as a balsa substitute. Although harder and heavier than balsa, its working properties are similar, while, at the same time, it is stronger. A model using thinner spars of basswood than would commonly be employed in balsa construction, may be produced at about the same weight and strength. Its general characteristics are similar to those of the hard type of balsa, and, for this reason, should be extremely useful in model petrol-driven 'plane construction. Basswood, in blocks, is a most suitable substance for propeller manufacture, and for carving bodies and wings for solid, scale models.

The foregoing remarks also apply to other woods, such as "obeechi wood," which are sometimes used as balsa substitutes.

Bamboo and Cane

Among the lesser used woods which are of great service for many purposes are *Bamboo* and *Reed Cane*. In the early days of the model aeroplane, these substances were used to the exclusion of almost all others, and it is a matter for wonder why these woods are now so seldom employed. It is not generally appreciated that bamboo can be planed and shaped quite easily, and lends itself to innumerable purposes. For tail and rudder frames it is invaluable, being light, flexible and strong. Bamboo is ideal for undercarriage legs, and there is nothing to equal its efficiency in any position where great strength is required for little material, as its standard of strength remains constant however small the section. This renders it particularly applicable to scale models, where it may be used for such items as scale-size streamlined wires, horn balances and pitot tubes.

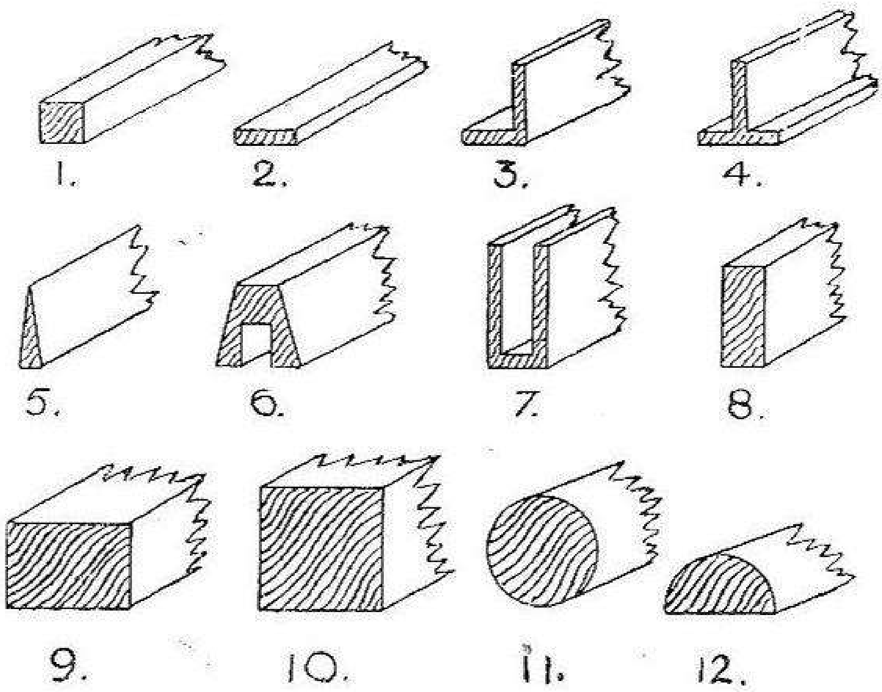

Fig. 5

(1) Longerons and spars
(2) Longerons and wing spars
(3) Longerons and wing spars
(4) Wing spars
(5) Trailing edges
(6) Leading edges
(7) Wing spars and motor sticks (with the addition of No. 2 can be converted to box spar)
(8) Longerons and motor sticks
(9) and (10) Block balsa for carving
(11) Leading edges and tail spars
(12) Beading

Plywood

Thin plywood in either birch or elder, of 1/32nd inch or 1/16th inch thickness, is often employed for fuselage formers, wing tips and panelling. Plywood is very strong and highly suitable for certain purposes, but should be used sparingly on account of its heavy weight. Thicker plywood of five or seven laminations is sometimes employed for noseblocks and nose formers, especially in heavy models where accidental landing impacts must be guarded against. Nose-blocks, however, are usually carved from satin walnut, mahogany or pine for the heavier machines, and, of course, balsa for the light-weights.

Balsa plywood is manufactured commercially, but is rather difficult to obtain, and the aeromodellist is advised to make his own by sticking two or three sheets of balsa together, the grains, of course, running in different directions. Balsa plywood is useful for any parts where a strength greater than that of ordinary sheet balsa is required, as is the case in such components as wheel discs.

Propeller Woods

Satin Walnut, *Mahogany*, *Pine*, *Basswood*, *White Wood* and *Balsa* are all used for the manufacture of propellers; the weight of the model usually being the deciding factor. It may be pointed out here that it is advisable to keep the propeller as light as possible. It is a common fallacy that a benefit is obtained by the "flywheel" effect of a heavy propeller. This is not true, as the energy stored as momentum is exactly offset by the energy absorbed by inertia.

Paper Tissue and Silk

Among the chief substances with which the aeromodellist is concerned is *paper tissue* for covering the lighter types of wings and fuselages. This is invariably Japanese tissue, which is sold in sheets measuring 21 inches by 30 inches. It may be had in various weights and qualities, in white, colours and silver, the coloured variety being usually more fragile than the white, and sold in smaller sheets. A more robust covering is *bamboo paper*, which when doped, is almost as strong as silk. It is heavier than the Japanese tissue, being about half the weight of doped silk. As compared with silk it has the advantage of being easier to apply; it also dopes somewhat tighter, and may be used with advantage for the covering of fuselages or any part of a model subject to much handling.

For power-driven models and other heavy machines the only suitable covering is *Bamboo Paper, Japanese* or *Chinese silk*. This material is extremely strong, and is usually sold by the yard, and is 36 inches wide. The weight should not exceed ½ oz. per square yard, and it is always advisable to use the plain white variety, as coloured silk never dopes clearly, thus presenting a patchy appearance. If colours are desired, these should be obtained by using a coloured dope, but further information on this point will be found in Chapter VIII, which is devoted to covering and doping.

The reader is warned not to use synthetic silk such as "Celanese," as these fabrics are a cellulose product, and dissolve under the action of dope. Any structure covered in artificial silk and then doped will, in the space of an hour, reduce itself to the bare structure again, and much time and money will be wasted. Undoped synthetic silk is very heavy, and should not be used ; in fact, it is a substance to be avoided by the aeromodellist.

Dope

On the subject of dopes a whole book could be written, and considerable space is devoted to the matter in Chapter VIII. No useful purpose will be served by anticipation at this juncture beyond a mention of dope as an important accessory to model aircraft construction.

Wire

An important material greatly used in our hobby is *Spring Steel Wire*, popularly known as "piano wire." This is used for undercarriage construction, propeller shafts, wing tips, tail and rudder frames and the various small fittings such as wing fixing hooks usually associated with model aeroplanes. Piano wire, although indispensable for certain purposes, should not be used too freely as its great weight is highly undesirable. This will need no emphasis when it is pointed out that steel wire weighs approximately *thirteen* times heavier than hard woods, and *seventy-eight* times heavier than balsa ! On the other hand, it is many hundreds of times stronger, but its lack of rigidity makes it unsuitable for use in long lengths.

For binding purposes *florists' wire* or *thin copper wire* is useful, especially for binding metal parts. However, thread or silk should, for preference, be used for binding wooden parts together, as wire is liable to cut into the wood. All wire binds should be anchored with a touch of solder, and all thread binding cemented with glue.

Adhesives

No aeromodellist will proceed very far with his hobby without encountering the question of glues and cements. Fortunately, to-day, this problem has been settled as the result of experience, and only one or two adhesives are in common use. These are all non-brittle glues, and are usually of the " fish glue " type such as " Seccotine," or the cellulose types such as " Durofix " or " Aeroglue." " Seccotine " is useful for the joining of woods such as spruce and birch, while for balsa " Durofix " or " Aeroglue " are admirable. These two latter cements dry either white or transparent. and give a very clean appearance to the finished model. " Aeroglue," being an ether cement, drys more quickly than " Durofix," and although not so strong when set, is admirable for the lighter models. Please remember that cellulose cements will dissolve celluloid, and should, therefore, be employed sparingly for sticking such things as celluloid windows or for affixing bushes in celluloid wheels.

" Le Pages Glue " is a cellulose cement which can be purchased from most model shops. This adhesive is highly suitable for model aeroplane construction.

Although *Scotch Glue* has been used quite successfully on heavy machines, it is very brittle and apt to be messy. Probably its most useful application is in the covering of models with silk, the glue holding sufficiently tight, when unset, to enable the silk to be pulled tightly across the framework. On the other hand, extra pressure will remove any wrinkles or slack places.

Paper tissues may be affixed quite satisfactorily with a flour and water paste, or, better still, any dextrine paste as sold commercially. Do not use gum, as this is too " wet," and is liable to make the tissue pulpy and extremely fragile.

Rubber

Every model aeroplane must be provided with motive power of some sort, and in fully 99 per cent. of models to-day, strip rubber performs this essential function. There are two kinds in general use for this purpose : the black and the brown. Both are sold by the yard, but a cheaper way of buying is by the pound, if one intends to do a fair amount of model flying. Various thicknesses are available, this being governed by the type of machine it is intended to fly.

Rubber was first employed to drive model aeroplanes in 1871, by Penaud, a Frenchman, who constructed and sold quaint little flying machines made of bird feathers. Since that time it has held unrivalled supremacy, and, indeed, with good reason, for it is simple, inexpensive and easily handled. The power-weight ratio is higher than that of any other form of motive power, almost all the energy which we can store in it being given out with very little loss. Unfortunately, this giving out of power is not equal over the period of the motor's run, being very great at first and gradually falling off to nothing as the rubber unwinds. This factor has a marked effect on model aeroplane design, as the first burst of power, and consequent great lift obtained, tends to put the aeroplane into a stall. However, more of this anon ; for the present the model aviator can take comfort in the fact that he has at his command a very efficient and light motor.

Some model makers claim that more turns can be applied to the black rubber than the brown sort will accommodate. On the other hand, some model flyers of good experience say that the black rubber breaks more easily. From the above, and in the absence of true experimental data, it may be assumed that there is not a great deal of difference, although some model flyers are obtaining first-class results from a new brown rubber recently marketed by Dunlop. This is of a light brown colour and is very similar to the American brown rubber.

Rubber should be stored in French chalk in an airtight tin, leaving plenty of room for expansion. Do not use a glass jar, as sunlight has a deteriorating effect.

Before using rubber it should be well lubricated with rubber lubricant, which is sold by all aero model dealers, or it can be prepared from the following ingredients :—

Pure soft soap	70 per cent.
Salicylic acid	½ per cent.
Glycerine	20 per cent.
Water	9½ per cent.

However, as a great quantity is not required, it seems hardly worth the trouble of making it oneself.

Rubber lubricant should not be used excessively, as the surplus does no good, and is only flung off, as the motor rotates, on to the fuselage, where it has a very harmful effect on the covering and structure. Just sufficient quantity should be employed to ensure that the rubber has an even coating. It is advantageous to lubricate a motor at least one day before using.

Other Materials

Among the multitude of minor things used in model aeroplane construction, a few of the most important are detailed below with their general applications :—

Materials :	Uses :
Brass Tubing	Propeller-shaft bushes, undercarriage fixings, tail fixings, etc.
Aluminium Tubing	As above (remember that aluminimum cannot be soldered easily).
Brass and Aluminium Strip and rod	Small fittings.
Gummed paper tape and Cartridge paper	For strengthening purposes : may also be rolled into tubes.
Celluloid	Cabin windows and windscreens (use sparingly, as celluloid is heavy).
Cellophane	Cabin windows.
Small Nails	Obvious purposes, but always avoid nails if possible as they greatly weaken a structure.
Rubber bands	For wing fixing, undercarriage springing, etc.
Bicycle Valve Tubing	For covering rubber-motor hooks.
Microfilm	For covering light-weight models.

Any model aeroplane can be constructed with the materials mentioned in this chapter. All of them are inexpensive, the cost of materials for any average machine being only a few shillings. Our hobby possesses, as not the least of its merits, the virtue of cheapness.

CHAPTER III

FUNDAMENTALS

In the first place it is necessary to understand the principles which underlie the problem of the flight of heavier-than-air machines. We have seen, in Chapter I, why it is that a suitable wing, when relatively in motion to the air, will exert a lift in opposition to the force of gravity, and it will be necessary to go over some well-known ground to determine how this lift can be utilised satisfactorily.

The flight of a model aeroplane may be divided into five stages. First, the *take off*, when the model leaves the ground or the hand ; then comes the *climb*, when the aeroplane gains altitude at a comparatively steep angle ; then a period of *normal horizontal flight*, during which the model proceeds at a more or less constant speed and height from the ground ; then a *glide* back to earth, after the power is expended ; and lastly, the *landing*.

Now, each of these evolutions is governed by a different set of conditions : in other words, the alteration in the speed and the flying angle of the model will cause the forces acting upon it to operate in a different manner, and we must decide which set of circumstances we will take as our standard when designing our machines. The obvious condition is that of normal horizontal flight ; the design being modified to meet the requirements of the other conditions. We must, therefore, first determine the forces which combine to keep our machine in a state of normal horizontal flight.

There are four main forces acting upon our aeroplane. Firstly, the lift, created by the wing, and tending to raise the machine vertically ; secondly, the force of gravity, or weight of the machine, tending to pull the model downwards ; thirdly, the thrust given by the propeller, acting through the propeller shaft, and tending to move the aeroplane forward ; lastly, the drag or resistance of the machine to forward motion through the air, and operating in opposition to the thrust. Fig. 6 shows, diagrammatically, these forces acting upon an aeroplane. In practice, of course, other factors such as upward air currents, act upon an aeroplane, but these are irrelevant to the subject of normal horizontal flight.

When all these forces are equal—the lift being equal to the weight, and the thrust equal to the drag—an aeroplane is said to be in "equilibrium," and is in a condition for free flight. It is not necessary, as some think, for certain forces to be greater than others, say, for instance, the lift greater that the weight; for equilibrium means that conditions remain unchanged, and, therefore, a model aeroplane in equilibrium would continue to fly indefinitely, or, as is actually the case, until one of the conditions altered.

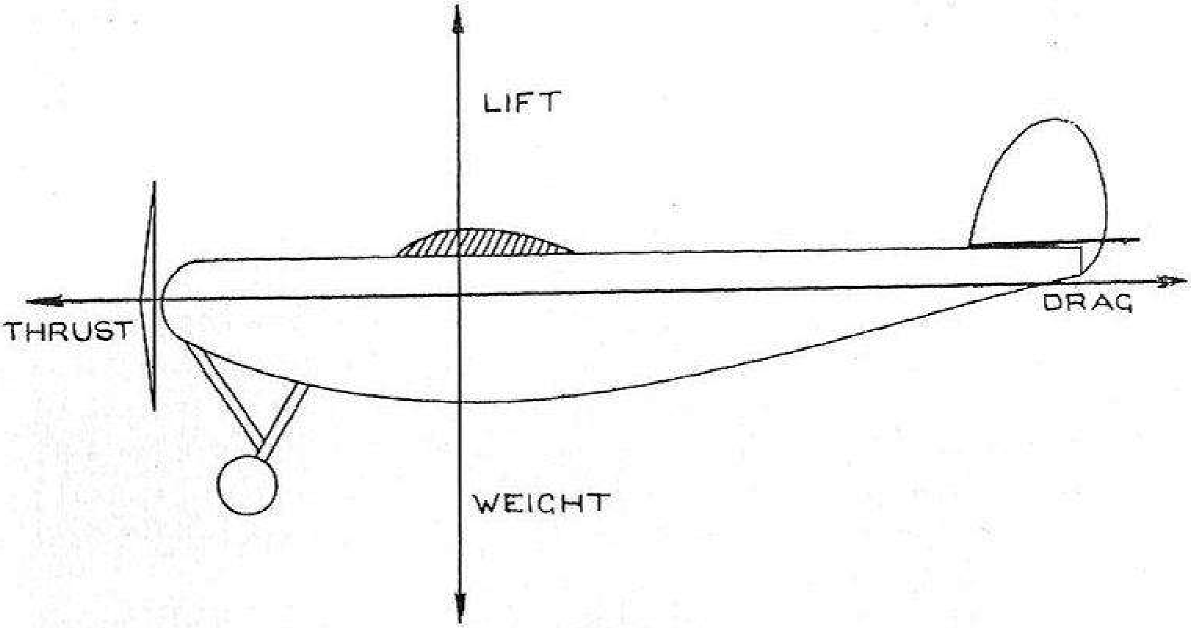

Fig. 6

It is often rather difficult for the beginner to understand this simple law, and it may be helpful to point out that, to maintain level flight, it is no more necessary for the lift to be greater than the force of gravity, than for gravity to be greater than the lift. If the lift is greater, then the machine will rise; if gravity is greater, then the machine will drop, and in neither case will *level* flight be maintained. In like manner, to obtain constant speed, it is only required that the thrust and drag be equal; if the thrust is increased, the speed of the machine will increase, until the drag again becomes equal to the thrust, at which point, the speed will become constant. Should the thrust decrease, the machine will slow down, and thus decrease the drag, until a point is reached where the thrust and drag are again equal.

Returning to the illustration in Fig. 6, it will be seen that the various forces are shown acting at the same point. In actual fact, of course, this is not the case ; the drag, for instance, being distributed over the whole machine. It is for convenience that we assume a centre of resistance ; in like manner, we assume that all the weight is concentrated at the centre of gravity. In the matter of thrust we are in a better case, as this is actually along the propeller shaft, and forms the line of thrust. The lift will operate through the centre of pressure of the wing, and will depend upon the position in which the wing is placed upon the fuselage.

The illustration in Fig. 6 shows all the forces ideally balanced, but, unfortunately, in practice it is impossible to arrange matters in such a happy manner. Even were it possible, things would not remain in this ideal state for long, as the slightest alteration in the flying angle of the model would disturb the equilibrium. For instance, the centre of pressure would move across the wing, and the centre of resistance would alter owing to the aeroplane presenting a different surface to the airstream.

It may be imagined that we are up against a rather hopeless proposition, but, happily, a tolerable solution may be found in compromise. This is accomplished by making the thrust and drag operate, as nearly as possible, along the same line, and by purposely moving the centre of gravity, and placing it in front of the centre of pressure, in the manner shown in Fig. 7. This illustration shows the normal placing of the various forces acting upon a high-wing monoplane when in flight. The centre of resistance comes too high to be exactly balanced by the line of thrust, which is necessarily low to allow the rubber motor to be accommodated. On the other hand, although it is quite possible to exactly balance the centre of pressure and the centre of gravity, it is advantageous to place the weight just a little ahead, so that the nose of the machine will drop, and the model assume the correct gliding angle when the power from the rubber motor is expended.

The reader who has understood our remarks to this point, will at once ask a very pertinent question. What prevents our aeroplane from assuming a nose-down position when the propeller is running ? This brings us to that most important accessory, the tail plane, which takes the form of a small plane placed at a considerable distance from the main wing, and exerting a force in an upward or downward direction in opposition to the riotous conduct of the forces of lift and weight. Only a small plane is necessary, as the distance of the tail plane, or "stabiliser," as it is sometimes called, from the centre of gravity, causes the correcting forces to act through a considerable lever. It will at once be evident that the angle of incidence given to the tail plane will have a marked effect upon its action, as will also the design of the tail itself.

Tail planes may be roughly divided into two types:— "lifting" and "non-lifting." The term "non-lifting tail" is really a misnomer; what is actually meant is that the tail exerts no lift at an angle of attack of zero degrees. These two types are illustrated in Fig. 8, and it will be seen that the lifting-tail is cambered in the same way as the wing, while the non-lifting tail may be of flat section or have an equal camber on both top and bottom surfaces. Although a chapter is devoted later on to tail units, this will be mostly concerned with constructional methods, so that a description of the functioning of the two types may be given here.

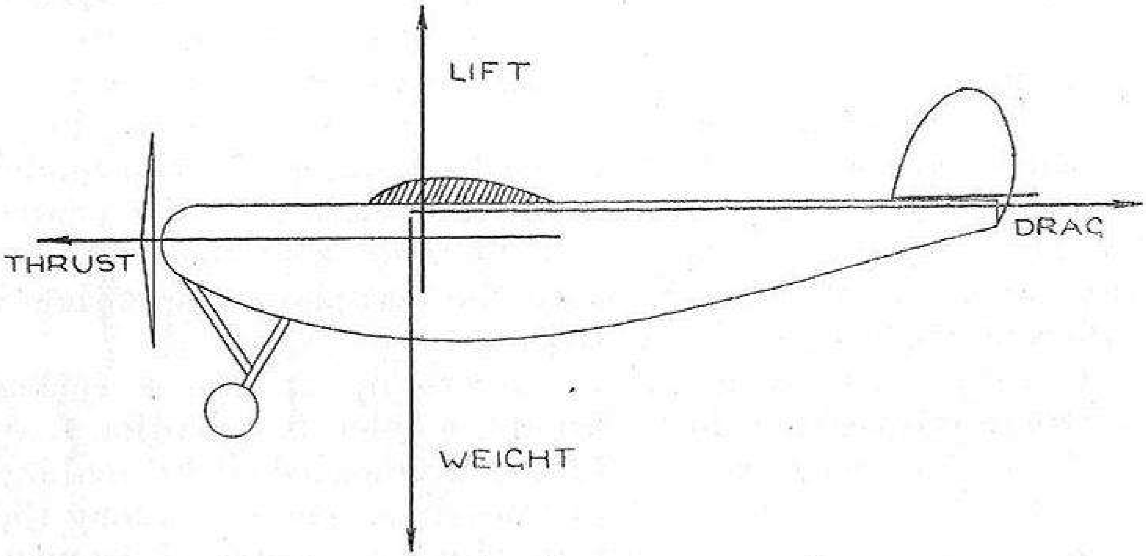

Fig. 7

The non-lifting or "negative" tail will be dealt with first, as this is the most popular type for model aeroplanes, and presents fewer difficulties in operation than the lifting-tail. When an aeroplane is in flight, there is a considerable backward rush of the air displaced by the propeller. This is known as the "slipstream." By placing the non-lifting tail at a small negative angle of incidence to the main plane, the slipstream will exert pressure upon the top surface of the tail plane and thus hold it down. Fig. 9 illustrates this method in operation, and shows how the natural nose-heaviness of the aeroplane is counteracted when the propeller is turning.* When the slipstream ceases, this holding-down force on the tail is absent, and the machine assumes a natural gliding angle owing to the centre of gravity being placed forward.

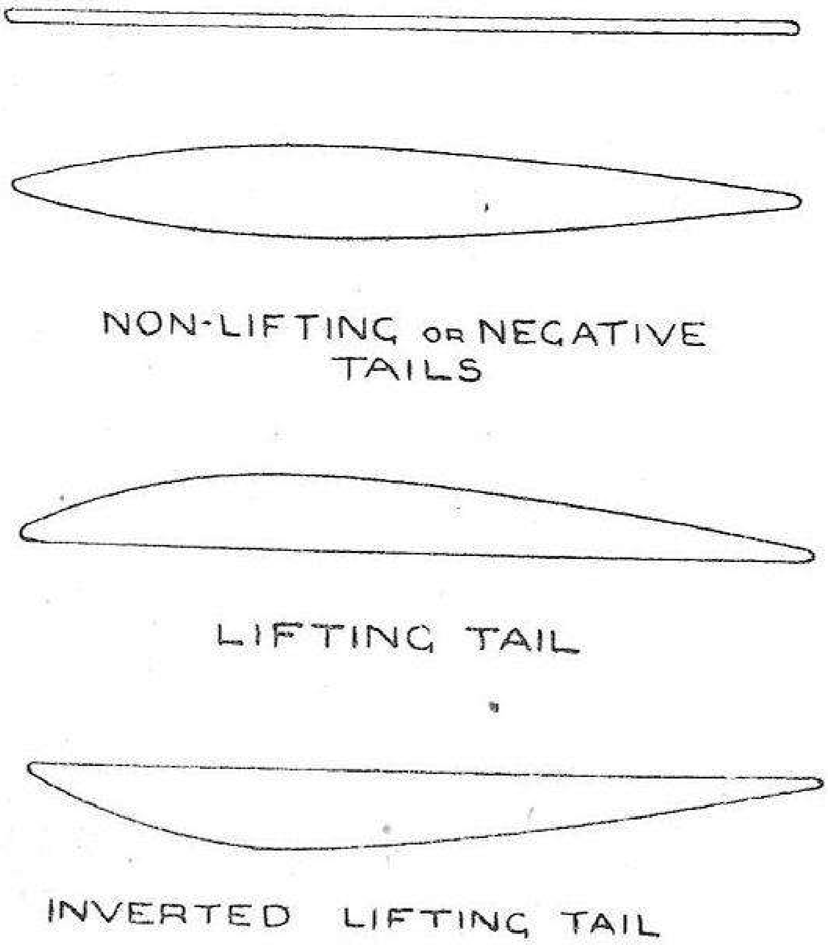

Fig. 8

The lifting-tail operates in a somewhat different manner, as the top surface being cambered, this type of tail exerts a lift in exactly the same manner as the wing. This force may be used in either an upward or downward direction, according to whether the tail is cambered on the top or bottom surfaces. In either case, the tail exerts a more or less

---

*In actual practice, of course, the slipstream is nowhere near so smooth and even as shown in the illustration: it has a whirling movement and a great deal of turbulence due to encounter with the wing and other parts of the aeroplane.

permanent force in either an upward or downward direction, and is of use when it is impossible to balance the main forces in themselves. In the case of the top surface being cambered, an upward lift will be exerted, varying, within limits, with the angle of attack of the tail plane, or the speed of the model through the air. When the flying speed of the machine is great, the increased airflow and slipstream cause the tail to exert a considerable lift in an upward direction; thus very fast and steep climbs may be attained without the model stalling, as any tendency for the nose of the machine to "rear up," immediately results in an increased angle of

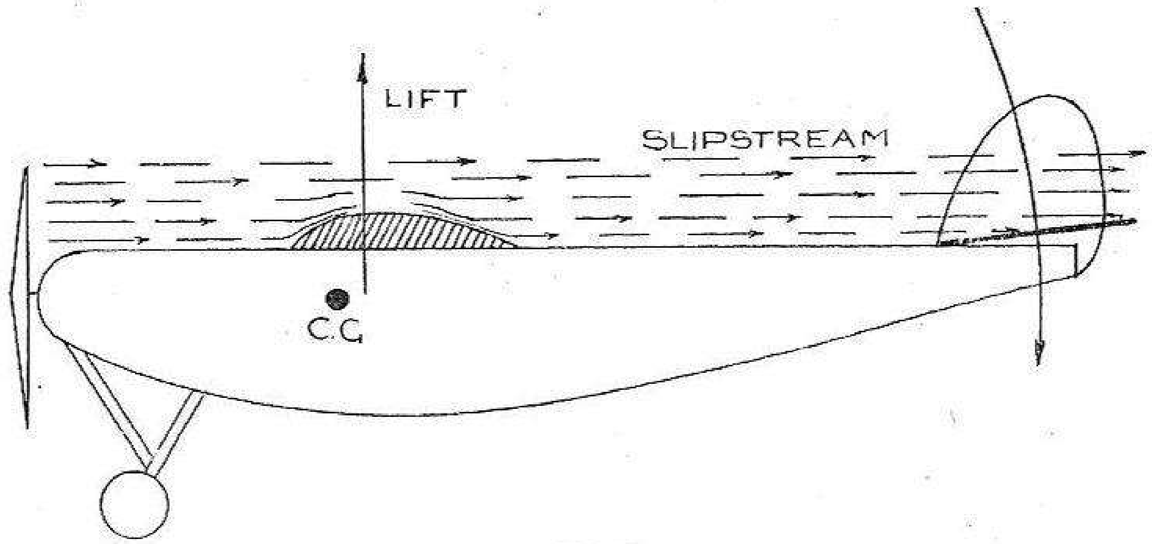

Fig. 9

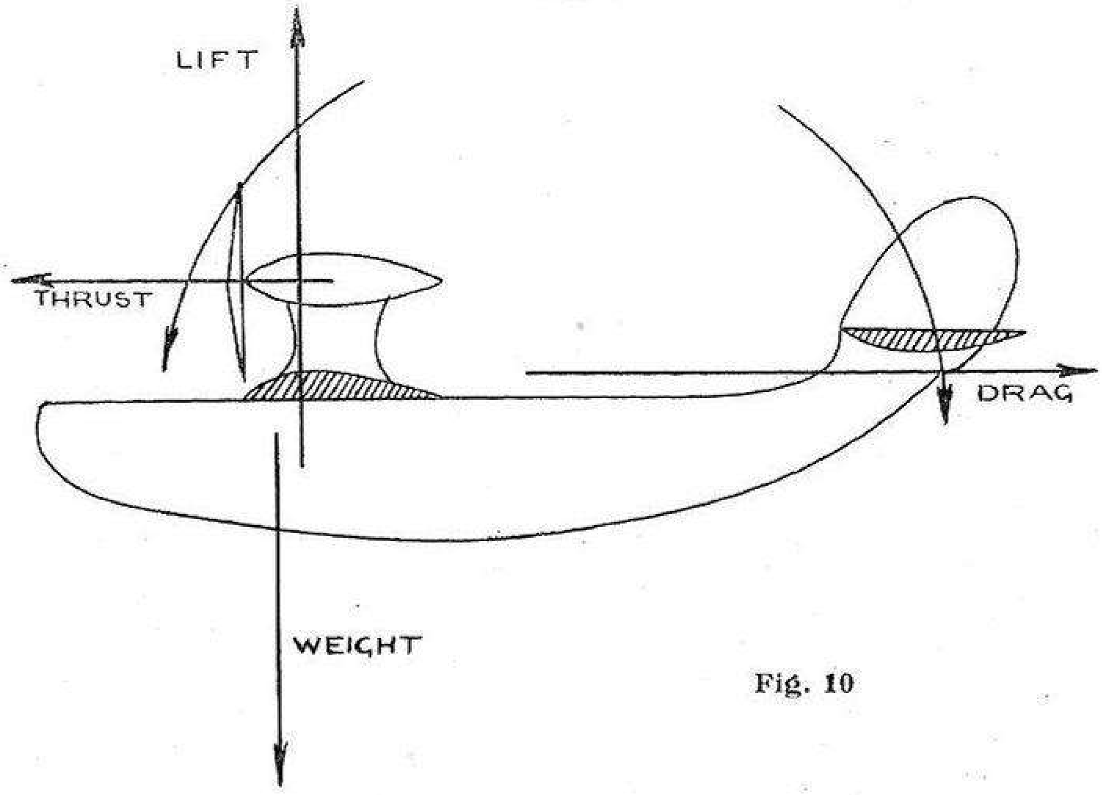

Fig. 10

attack of the lifting-tail. This increased angle causes the tail to exert a greater upward lift, which, as it were, pulls the machine out of the stall. On the other hand, when the power ceases and the speed and slipstream drop, the lifting-tail loses its relative effectiveness, the natural nose-heaviness of the machine exerts itself, and the model glides to earth.

Lifting-tails are tricky in use, and present difficulties in design and operation, unless the above principles are thoroughly understood. The beginner is advised not to design machines embodying the lifting-tail until considerable experience of model aeroplanes has been gained, nor to alter the angle of tail incidence in existing designs, as this has usually been carefully worked out by the designer.

The " inverted lifting-tail " as shown in Figs. 8 and 10, is very little used in model work, but is sometimes employed in gliders and for model seaplanes. In gliders it tends to keep the tail down and the wing at an effective lifting angle, while in seaplanes or flying boats it is useful in counteracting the effects of a high thrust line. A high thrust line is often necessary in this type of machine, as the propeller and engine (in the case of petrol-driven models) must be kept well clear of the water. As a high thrust line in relationship to the centre of resistance tends to make a model " nose-over," the inverted lifting-tail is utilised to counteract this tendency, the tail being held well down. However, this system is rather inefficient, as the downward pull of the tail plane constitutes a more or less permanent load on the machine.

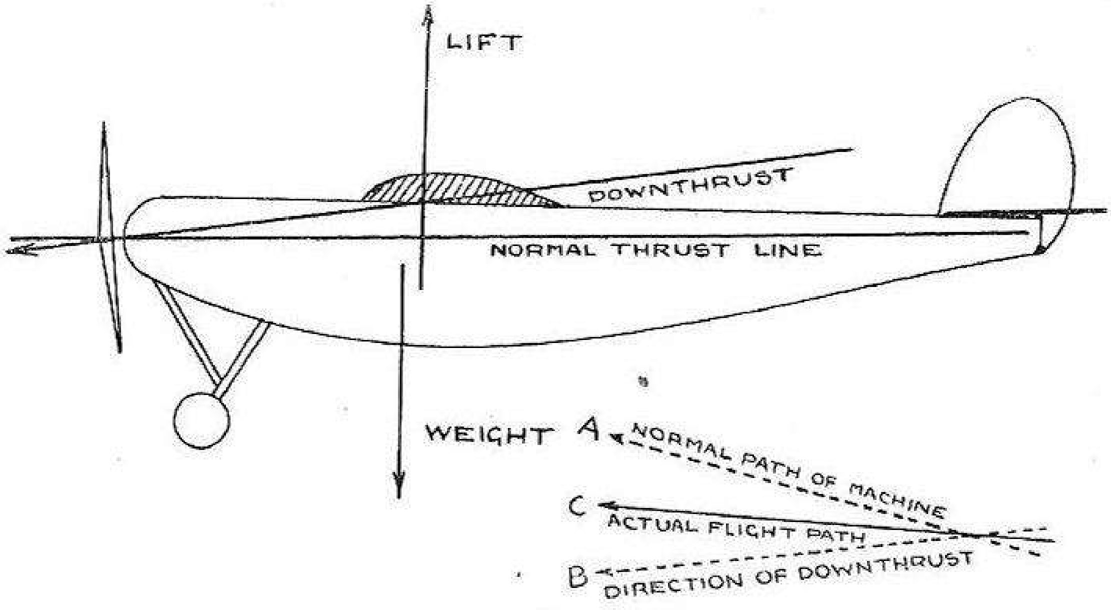

Fig. 11

A popular method for the prevention of stalling, and of obtaining longitudinal stability during the first burst of speed due to the great initial outburst of power from the rubber motor, is by the use of "downthrust." This is obtained by inclining the shaft of the propeller in a downward direction. Fig. 11 shows, in an exaggerated manner, how this system is applied, and it will be seen that, while retaining the position at which the thrust will act, the axis of the thrust line is altered.

The smaller drawing indicates how downthrust actually operates. The line marked "A" shows the normal path of the aeroplane, which is at so steep an angle that the machine would undoubtedly stall. Line "B" shows the direction in which the propeller is tending to drag the machine. In accordance with a well-known law of forces, the actual path of the aeroplane will lie along line "C," which lies at a point determined by the relative strengths of forces "A" and "B." The use of downthrust has its limitations, however, and very little should be incorporated in the design of any normal model.

So far, we have only dealt with the problem of longitudinal stability, and there yet remain the questions of lateral and directional stability in the designing of our models. Luckily, these problems do not present the difficulties which we encountered in stabilising our machines in a longitudinal direction. In the case of lateral stability, this is obtained by the simple expedient of incorporating dihedral angle in the wing. This is shown in Fig. 12. The lift which may be obtained from any aerofoil is largely dependent upon its effective area (Fig. 12). We will, therefore, imagine a wing, embodying a fair amount of dihedral, in actual flight. While the wing remains in a steady horizontal position, each half-wing will exert an equal amount of lift, and its lateral stability will be maintained. If, however, owing to disturbing influences, one wing-tip should dip, the effective area, and consequently the lift, will be increased. At the

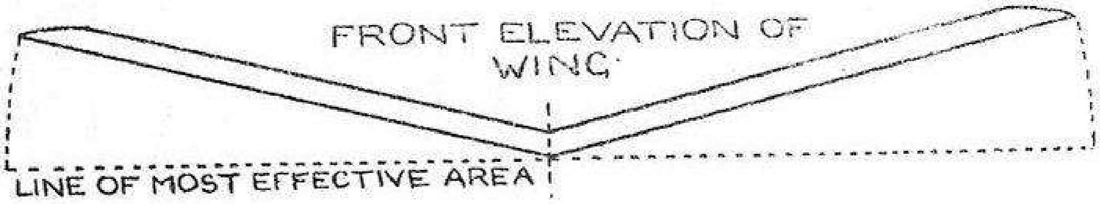

Fig. 12

same time, the effective area and lift of the opposite half-wing will be lessened, and the aerofoil will automatically resume a balanced position. Lateral stability may also be assisted by keeping the centre of gravity low, and this point will be considered a little later on.

Directional stability may be attained in two ways, one of which is to provide a vertical fin or rudder at a considerable distance behind the machine's vertical turning axis, which passes through the centre of gravity. It must be remembered that any side area of the machine which lies behind this turning axis will tend to keep the machine directionally stable. Of course, any area in front of the centre of gravity will act in opposition, so that we must ensure that more side area lies to the rear, and it is for this reason that a tail fin is used.

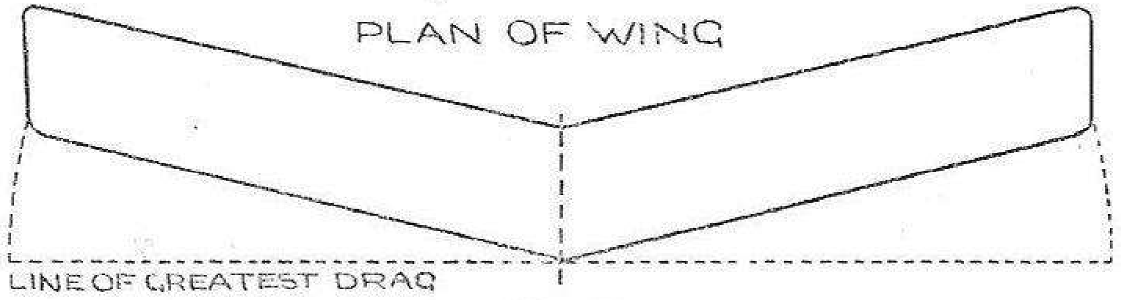

Fig. 13

Directional stability may also be attained or assisted by the use of a swept-back wing, as illustrated in Fig. 13. This is really a wing which has a dihedral angle in the horizontal plane, and its action is exactly similar to that of the dihedral angle used to maintain lateral stability, except that the varying factor is the drag or resistance of each half-wing, instead of the effective area. Only in very unusual machines, such as the "Pteradactyl," is sweep-back solely relied upon for directional stability, yet, as an adjunct to the tail fin it is very valuable, and ensures a remarkable degree of stability in any model in which it is incorporated.

The manner in which these various methods are employed to stabilise a model aeroplane is known as the "line-up," and having covered this in a general manner, we will proceed to its application in the various types of model aeroplanes which the constructor may build.

It is often a problem for the novice to decide which type of aeroplane is most likely to give him the best results, and the choice is so wide that the beginner may easily be pardoned for any hesitation in his selection. We shall, therefore, put forward a suggestion which will not be readily received by some people, but one which is, nevertheless, of the utmost necessity. *Do not attempt too ambitious a model at first.* This advice is so often given and so often disregarded, that particular emphasis must be put upon it here. We presume you are reading this book because you are anxious to know something of model aeronautics. We, on our part, are just as anxious to tell you all we know, and we must ask you to believe that our only desire is to give you help and good guidance. Therefore, *do not attempt too ambitious a model at first.*

The desire to make a beautiful and complicated machine is a laudable one, as it denotes a keen interest, and confidence in one's abilities. Yet, in model aeronautics, there is no precept so true as the one which says we must walk before we can run. The successful building and flying of model aeroplanes is a skilful business ; easily learned, it is true, but one which demands knowledge, and which does not respond favourably to haphazard or hasty methods.

It was the fashion at one time to recommend that the novice should build a spar model as his first attempt. This was little more than a stick, to which was affixed a simple wing, a tail unit, a propeller and a few strands of rubber. Fortunately, the introduction of balsa wood, and the consequent ease of construction, makes such stark simplicity unnecessary, and, to-day, an interesting, graceful and highly efficient fuselage model is well within the scope of the beginner.

Ignoring triplanes and other unusual types, aeroplanes may be divided into two classes, namely : monoplanes and biplanes. For several reasons, mainly structural, monoplanes are by far and away the most popular type for model work, and may be subdivided into four types : low-wing, high-wing, mid-wing and parasol. Illustrations of all these types are given.

High-Wing Monoplanes

Fig. 14 shows the high-wing monoplane, which is, undoubtedly, the most popular type of model aeroplane. It is easy to build, has good flying qualities and is a design which lends itself very well to a successful compromise with our old acquaintances, the four main forces. As will be seen in the theoretical drawing in Fig. 7, the chief difficulty lies in balancing the thrust and drag. As all the components, except the undercarriage, are placed high, the centre of resistance is high also, and it is impossible to place the thrust in exact opposition, as the rubber motor must have ample clearance within the fuselage.

The reader will, by now, have gathered that the drag or resistance of a model aeroplane is the real villain of the piece. In the cases of the lift, thrust and weight, these may be placed, more or less, in any desired position ; but the drag is such an intangible quality that it is almost impossible to compute it accurately, without recourse to complicated wind-tunnel experiments which are entirely outside the scope of the amateur.

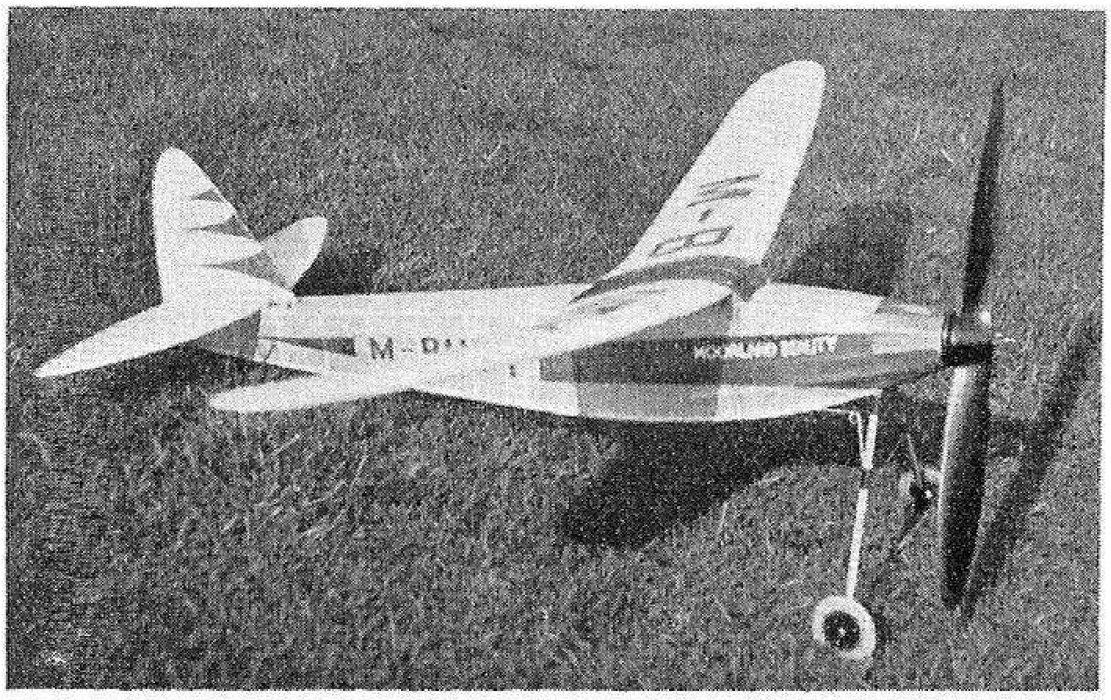
Fig. 14.—High-wing monoplane with box-fuselage

To resume. This low thrust line and high centre of resistance tends to raise the nose of the machine when the propeller is running ; the tail may thus be set at a slightly less angle of incidence than is necessary in the low-wing or mid-wing types.* This is an advantage, because very little load is imposed on the machine by an excessive downward pull on the tail plane.

---

* The question of the actual angle of incidence is discussed in Chapter V.

In addition, the centre of gravity can easily be kept low, which means that less dihedral is needed in the main plane to obtain lateral stability, and, therefore, a good proportion of the effective area may be utilised. This, coupled with the advantage of easy construction, makes the high-wing monoplane so extremely popular with the majority of model aircraft constructors.

The Mid-Wing

On paper this appears to be the ideal type, as the thrust and drag can be placed in exact opposition, and very little dihedral is needed, thus retaining much of the wing's efficiency. It also lends itself to clean design ; the wing being easily faired into the fuselage. On the other hand, a larger angle of incidence is necessary in the setting of the tail plane than is required on the high-wing type. This, as we have already pointed out, virtually increases the load which the aeroplane must carry. However, this theoretical objection seems to have very little existence in actual practice.

The disadvantages of the mid-wing type are chiefly structural, it being difficult to obtain rigidity of the wings. This is caused by the inability to carry the wing spars through the fuselage, owing to the presence of the rubber motor. Bracing wires or struts may be used, but these are apt to be a nuisance in use, and can, in very few cases, be placed at an effective bracing angle. Another drawback is that there exists a mechanical difficulty in providing movement of the wings in a fore and aft direction along the fuselage as an aid in trimming the model for flight.

In petrol-driven model aircraft the inability to stiffen the wings by a continuation of the wing spars through the fuselage does not exist, and the mid-wing should, for this reason, be excellent for this type of machine. Doubtless more will be done in this direction as the popularity of the miniature petrol engine increases.

Fig. 15 and Fig. 16 illustrate the mid-wing type of model aeroplane.

The Low-Wing

Many successful models of this type have been designed yet the writer has always felt that too little has been done with this type of machine.

The low-wing aeroplane has two great advantages. In

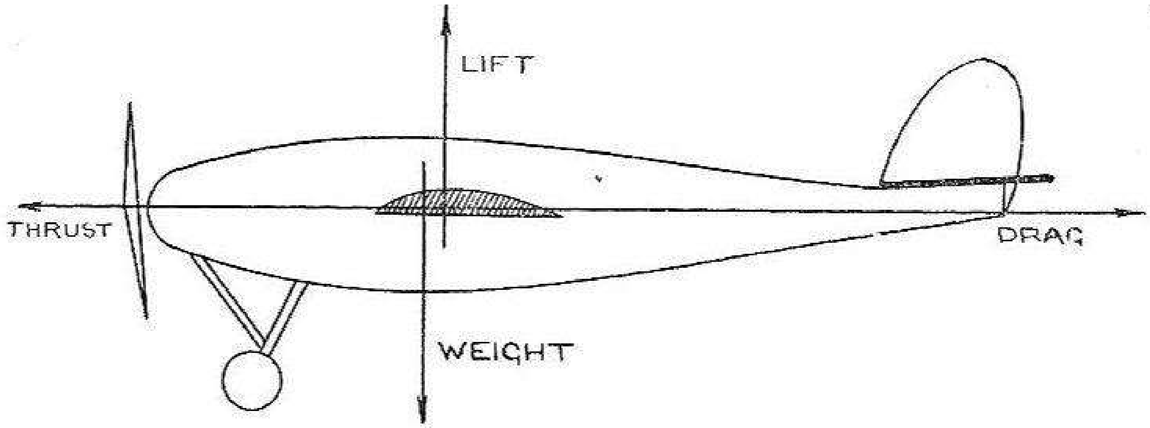

Fig. 15

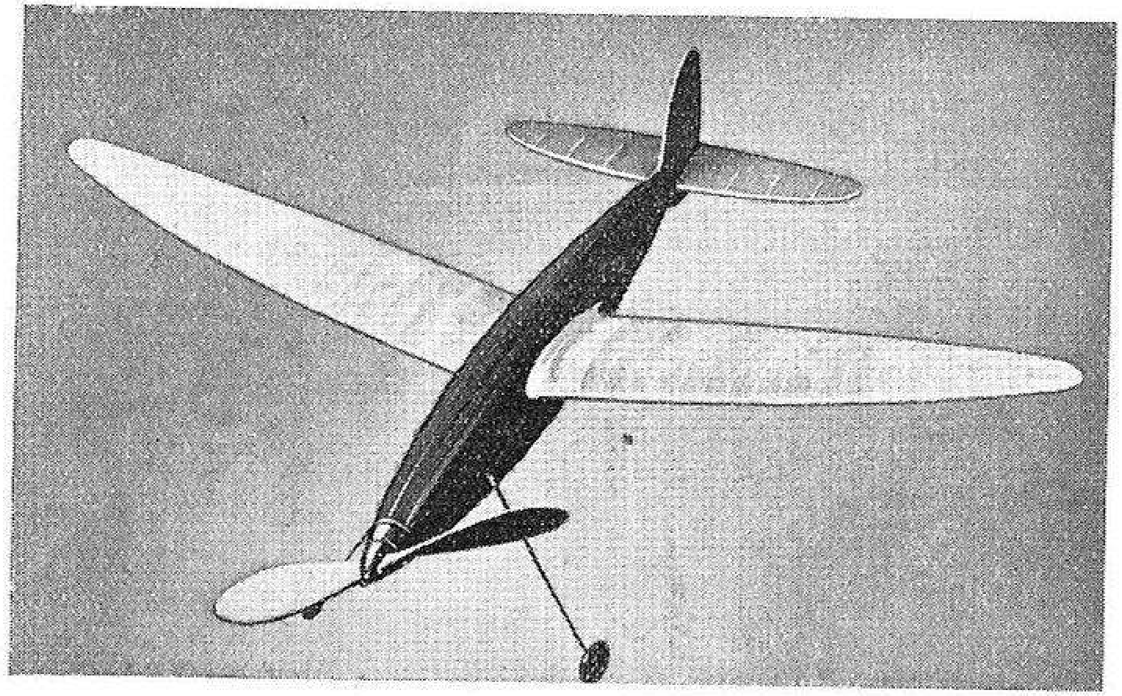

Fig. 16.—Mid-wing monoplane

the first place, the thrust line can coincide exactly with the line of drag; secondly, the wing spars can be continued from one half-wing to the other thus ensuring good rigidity. Against these qualities may be set the necessity for rather a large dihedral in the wing, and a fairly big incidence in the setting of the tail plane. Care is also needed not to get the machine top-heavy.

The disposition of the forces acting upon a low-wing monoplane is shown in Fig. 17 and an illustration in Fig. 18.

Low-wing models are capable of very good performance, have exceptional stability, and form one of the most interesting and promising types.

Parasol and Gull-Wing Machines

The great success which has attended this type of model in America has, recently, made it very popular in this country. The great advantage gained by this arrangement is that the centre of gravity falls very low, and little or no dihedral angle is required in the wing.

Opposed to this advantage is the fact that it is almost impossible to get the lines of thrust and drag to coincide; the centre of resistance being very high. This state of affairs is shown in Fig. 19, and calls for a somewhat complicated "line-up." In some cases the difficulty has been met by setting a "negative" tail at a positive angle to the main plane, a plan which calls for considerable skill in design and adjustment. This arrangement really means that a lifting tail is used, as we have seen in Chapter I that a flat plate, when moved at a suitable angle through the air, will exert a

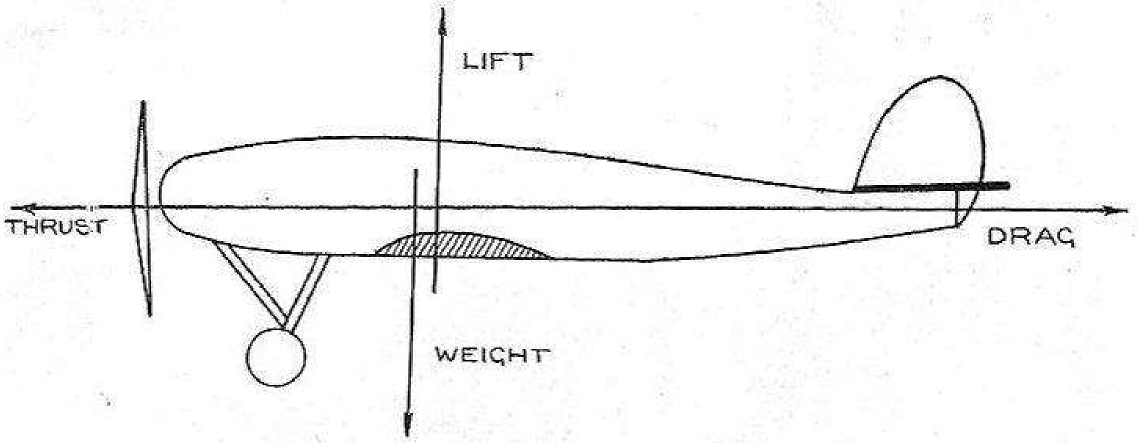

Fig. 17

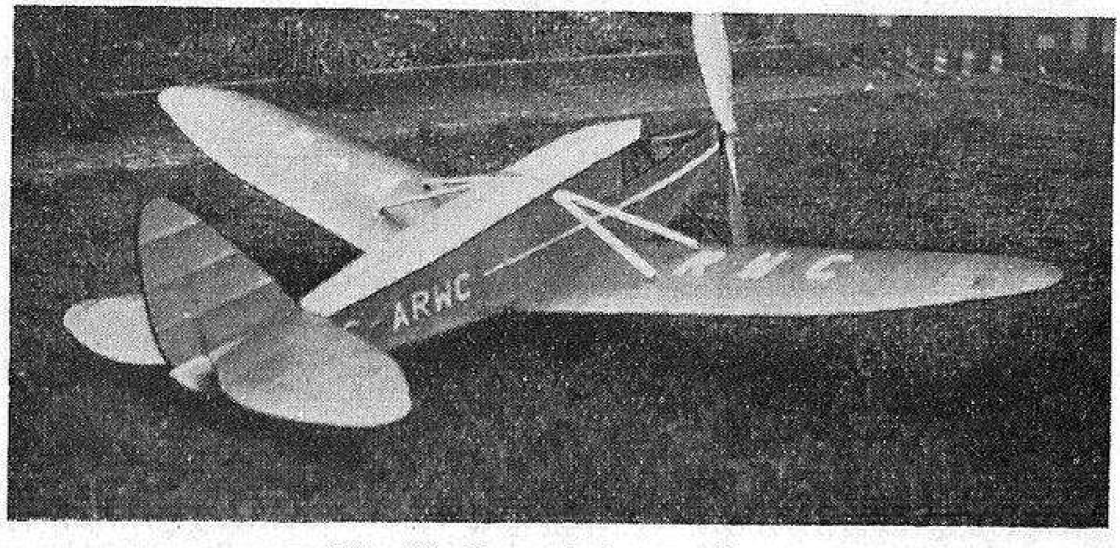

Fig. 18.—Low-wing monoplane

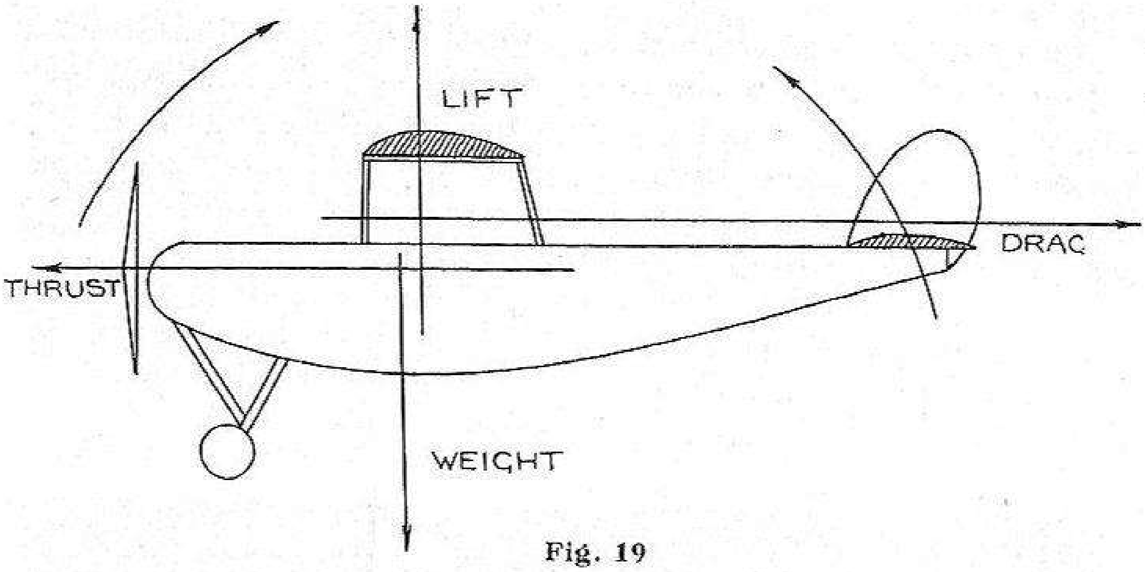

Fig. 19

lift. The most reasonable course is to use an orthodox lifting tail, as already described, and most of the outstandingly successful machines use this type.

Due to the fact that many duration competitions have fallen to parasol model aeroplanes they have come in for a great deal of concentration from model flyers. It is open to question, however, whether an equal attention, *on modern lines*, to the more orthodox types of model aeroplanes would not yield equal results.

Gull-wings, which partake of the nature of parasols, are subject to these remarks, a typical machine of this class being illustrated in Fig. 20.

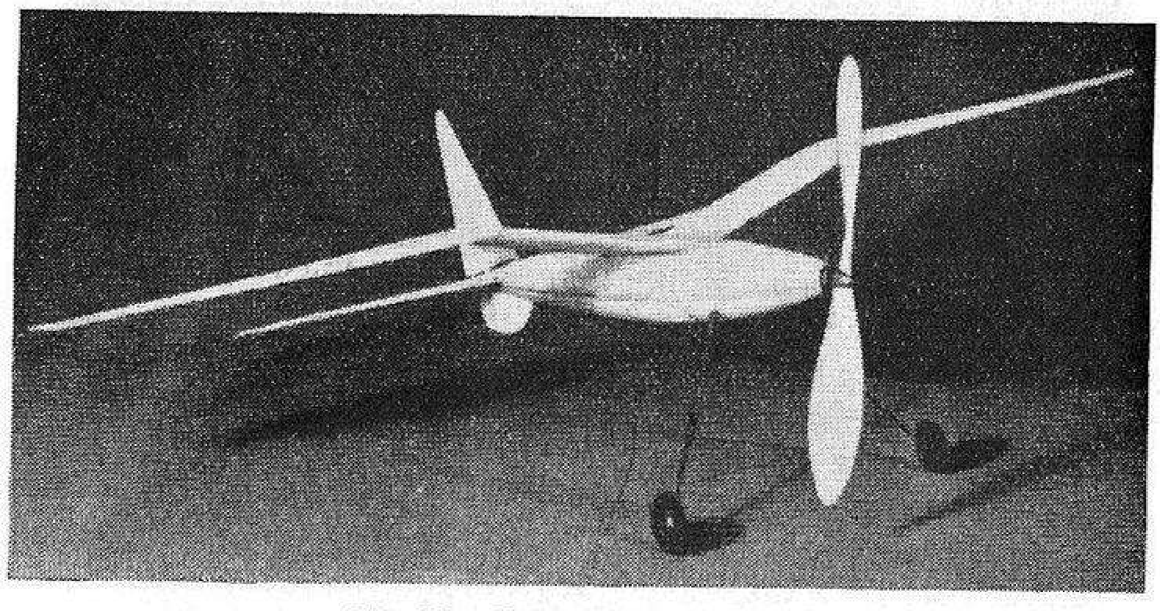

Fig. 20.—Gull-wing monoplane

Biplanes

Though much neglected by model aeroplane builders, the biplane is not only a very fascinating type but is capable of giving very good results. The use of two wings enables a large lifting surface to be utilised without excessive span, and without any proportionate increase in weight. In this way the wing loading may be kept low.*

The biplane illustrated in Fig. 21, has a span of 36 inches, is of exceptionally robust construction, and although weighing seven and one-half ounces, has a wing loading of only two and one-half ounces per square foot.

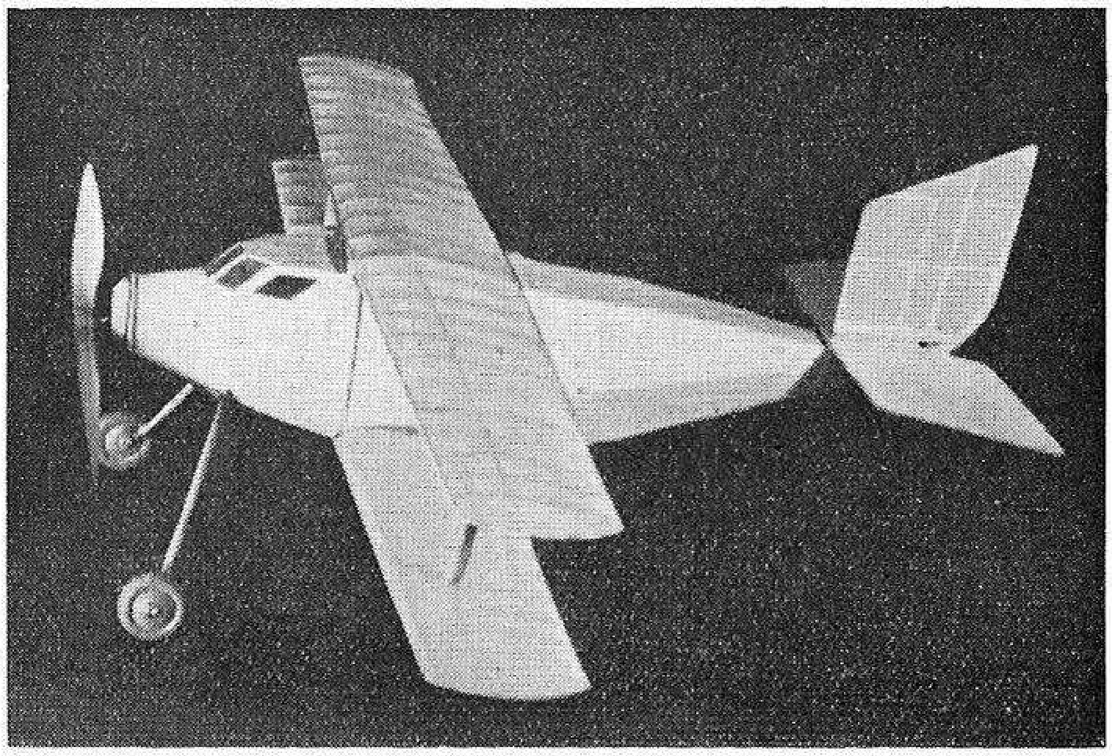

Fig. 21.—Cabin biplane

The constructional difficulties are somewhat great in biplanes, and call for a certain amount of skill and ingenuity, the great trouble being that of obtaining a rigid wing fixing without excessive complication and weight. In the model illustrated, this was overcome by the use of a very stiff top wing, the lower half-wings being hinged at the roots to the fuselage, and depending from the top wing by hollow paper struts. Rubber bands, affixed to hooks on the main spars of both top and bottom wings, pass through the hollow

---

* In model work, the term "wing-loading" always expresses the number of ounces carried per square foot of main wing area.

struts and clamp the assembly together. These points are given in illustration of the manner in which biplane design may be approached.

In the matter of line-up, the biplane presents no great difficulties, it being possible exactly to oppose the thrust and drag. No excessive incidence is required in the tail plane setting. Tails may be placed above or on the half-way point between the two main planes; but should not be situated lower than this. They may be of rather larger area than those of monoplanes, as the erratic behaviour of two main wings has to be corrected. Better stability may sometimes be obtained by setting the lower wing at a negative angle of incidence to the top wing.

The usual line-up of biplanes is shown in Fig. 22.

Biplanes often hold a great attraction for the novice on account of their somewhat "real" appearance, but the beginner is warned not to attempt this type of aeroplane except it be to some well-known design, until experience has been gained in flying and trimming the more simple types.

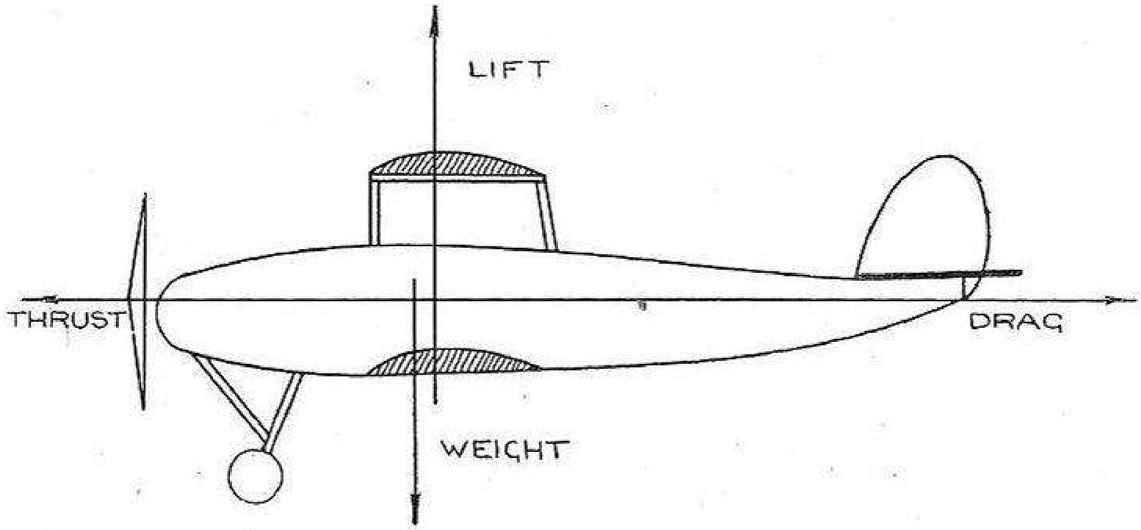

Fig. 22

Pusher Type Aeroplanes

This term describes all models where the propeller is situated behind the main wing. This type was very popular before the Great War of 1914-18, but later years have seen very few upon our flying fields. Their growing popularity in full-sized practice will, no doubt, tend to revive this type of model, which has, indisputably, some interesting features.

They are certainly worthy of experiment in the light of modern knowledge, with special regard to the fact that the wing moves forward through *undisturbed* air ; the slipstream, of course, lying behind.

A great advantage is that the propeller is protected in the event of a bad landing, a particularly useful feature in the case of power models driven by an expensive petrol engine.

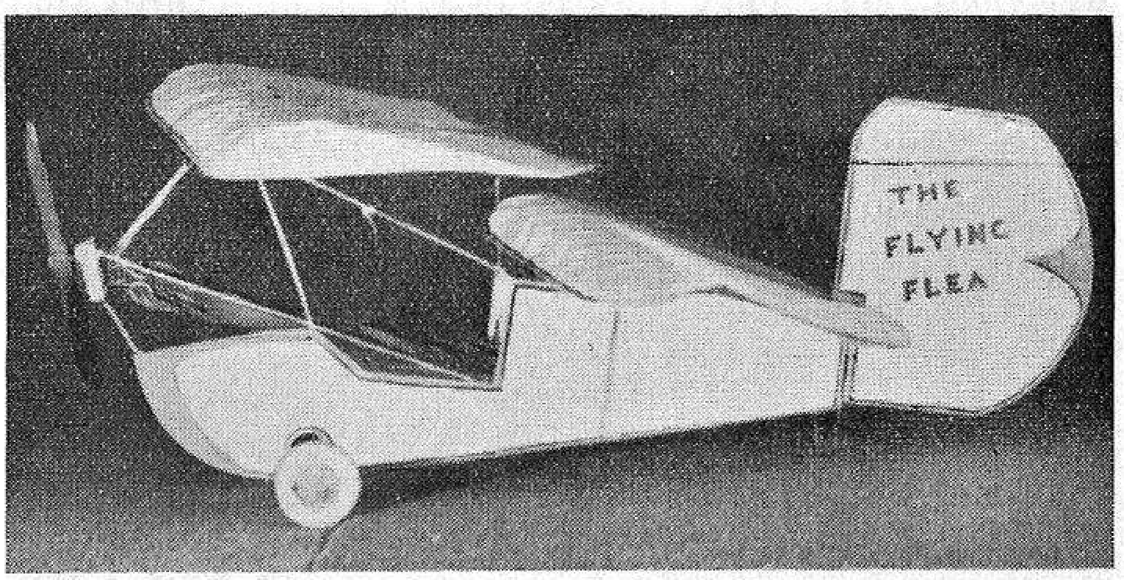

Fig. 23.—Model "Flying Flea"

It is interesting to note that Stringfellow's model aeroplane of 1848, which was the first aeroplane to fly, was a twin-screw " pusher."

Unusual Types

Aeroplanes such as the " Autogiro," " Pteradactyl," and " Flying Flea," form unusual types which cannot be adequately dealt with here. In any case they are unsuitable for inclusion in such a book as this, as they are usually the product of experienced builders who have made a study of the various peculiar factors in design. The " Flying-Flea " and the " Autogiro " illustrated here (Fig. 23 and Fig. 24), are both successful models, but were only evolved after a considerable amount of experiment had been undertaken. Please do not attempt to design either of these as your first model.

Classification

Having dealt with the various features of the several types of model aeroplane, there yet remains a further classification.

It is obvious that any one of the types mentioned in the foregoing pages may be constructed from various materials, and may be elaborated or simplified to almost unlimited degrees. Thus, for instance, a 36 inch span high-wing monoplane may weigh twelve ounces or only three ounces, according to the materials and methods employed, and these two machines will have vastly different flying qualities and performances. This makes some other classification, other than that of mere lay-out, necessary, and the obvious and most useful is a classification for weight. Thus it comes about that model aeroplanes are divided into classes, by a system which ignores lay-out, wing-loading and appearance, and is based solely on the total weight of the machine, as follows :—

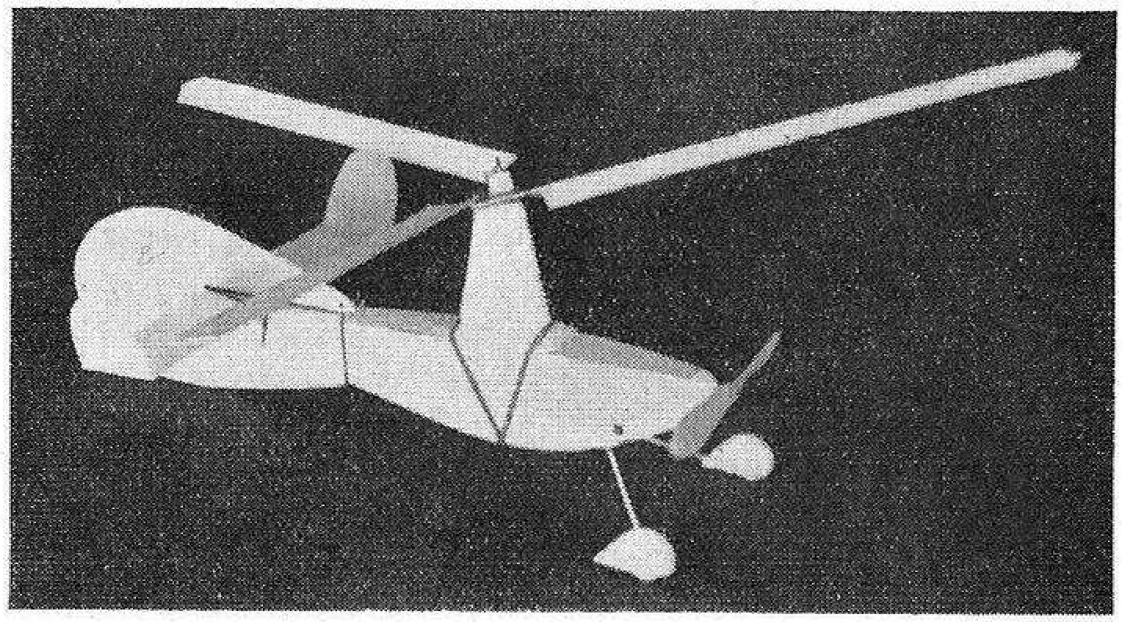

Fig. 24.—Model Autogiro

No. 1	Ultra-light-weight duration models and indoor flyers, up to three ounces.
No. 2	Light-weight duration and general purpose models, from three to five ounces.
No. 3	Medium-weight general purpose and duration models, from five to nine ounces.
No. 4	Heavy-weight general purpose models, over nine ounces (rubber driven).
No. 5	Power-driven models.

The above is the generally accepted classification, but models are sometimes constructed which do not conform to these particulars. For instance, a heavy-weight duration model may be required, but these are usually built to comply with rules laid down by some special competition in which the builder may wish to participate.

It will be noticed that only the lighter machines are classed as duration models, and this is due entirely to the present use of balsa wood in model aeroplane construction. He would be a very daring or optimistic man who would enter a model over these weights in any ordinary duration contest, in view of the wonderful performances which are now the order of the day.

Ultra-Light-weight Class

Machines in this category are usually built with only one purpose in view—duration. To that end they are always of the simplest design and construction, all "trimmings" being rigorously avoided. It goes without saying that this type is always of all-balsa construction—and not much of that—while the covering is of the lightest Japanese tissue paper. In some instances, to save weight, the paper is not even doped, but is sprayed with water and left to shrink. It is almost unbelievable to what extent a model of this class may be lightened, and the author has seen fuselage machines of 40 inches span weighing about one and one-half ounces!

In spite of their simplicity, this class of machine is not easy to construct successfully, owing to the excessive care and accuracy involved. The design calls for considerable skill, inasmuch as the smallest amount of material must be utilised in the most efficient way. There is no margin for error either in design or manufacture.

Although highly efficient in their way, their successful functioning depends so much upon weather conditions that it is rarely one meets a day upon which the ultra-light-weights can do themselves justice. However, there are few sights so fascinating to the model flyer as that of an ultra-light-weight machine in flight, its huge propeller turning lazily round in the calm of a summer evening.

Indoor flyers include a vast variety, ranging from tiny tissue paper machines to quite large, microfilm covered aeroplanes. They are not vastly popular in this country, owing, chiefly, to the difficulty of obtaining the use of large rooms or halls suitable for the purpose. In America, where aeromodellists seem to be well favoured, indoor flying forms a distinct and not unimportant branch of the pastime. The flying of these small machines by means of a thread attached to a central pole is, however, gaining popularity with British flyers. In this system, the machine is secured to one end of a thread—usually by one wing tip—and the other end of the thread is swivelled to the top of a pole which stands in the middle of the room. The aeroplane is then flown in the usual manner under its own power. Quite interesting flights may thus be obtained, even in the space of an ordinary living room.

Some of the American microfilm covered machines are real works of art, and the author knows of at least one which is a miracle of fragility. It has a span of 36 inches, and weighs, complete with rubber and propeller, one quarter of an ounce! It is built of 1/64th inch balsa, strutted with writing paper, and its two strands of 1/32nd inch square section rubber will accommodate thousands of turns. This motor will only just turn the propeller, which revolves with a hesitating "flop," and imparts a jerky motion to the machine which is very weird and amusing to watch. It will fly for twenty minutes, and its owner steers it up and down the hall by means of a dexterous touch upon the tail.

Light-weight Class

Aeroplanes under this head, by reason of their straightforward design and good performance, are probably the most popular of all types. It is to this class of machine that victory often falls in competitions for duration, and the resultant concentration upon these models has lifted them to a very high pitch of performance. As in the case of the ultra-light-weights, only the bare necessities of flight are incorporated, and the light-weight model is thus usually reduced to a plain rectangular section fuselage carrying a simple wing and tail unit. This pursuit of simplicity also confines these machines almost solely to the high-wing variety, which is undoubtedly the most straightforward design.

These models are not so prone to the influence of the weather as their lighter brothers, and a well-designed light-weight will perform satisfactorily on most average English days.

All-balsa construction is again a feature of the light-weight aeroplane, and a minimum amount of such necessities as wire is used. A very light wing loading—two to three ounces

—ensures a good climb, at the same time facilitating the glide, and rendering the machine less likely to mishap in landing.

Altogether, the light-weight aeroplane forms an almost ideal model, being simple, inexpensive and capable of extraordinary performance. At the same time it is not so fragile as to preclude the exercise of a little experiment in its design and making.

Medium-weight Class

Although the light-weight model is undoubtedly the most popular type to-day, no serious aeromodellist will neglect the machines of medium weight. Their great feature is that, not being hampered by the restrictions of weight and fragility to the extent of the light-weight classes, the builder is able to give full play to the exercise of his ingenuity and fancy. With the eight ounces or so of material available, some very beautiful machines may be evolved. The fuselage may assume a round, oval or composite section ; cabins may be incorporated, and there is scope for experiment and clever device in a thousand directions.

Good design and workmanhip are essential, and particular care must be taken to stabilise the machine perfectly. These qualities are rendered necessary by the fact that models of this weight fly comparatively fast, and any inaccuracy, such as a warped wing or tail, has a very detrimental effect on the model's behaviour. Also, the landing speed is comparatively great, and, therefore, a good, clean landing is necessary if damage is to be avoided.

Medium-weight models may incorporate in their make-up a certain amount of spruce or birch, but very successful and interesting machines are built with an all-balsa construction. This practice is to be commended. as balsa has considerable strength when used in large section. Good strength and rigidity may be obtained for small weight, and this seems to constitute an intelligent use of material. This method is standard practice in America, where, as stated before, even heavy petrol-driven machines follow this principle.

A well-designed medium-weight model is well worth the trouble expended upon it, as the quality of flight is good ; in other words, it flies steadily and in a very determined manner.

As the well-known "Wakefield" class of machine falls into this category, it has received more attention from model makers than has any other type of model aeroplane. In consequence, the duration of flight which these machines are capable of is remarkable, being measured in parts of an hour rather than in minutes! The "G.B.3" which is described elsewhere in this book, is a typical example of the trend of these machines, and its design should be carefully studied by all aeromodellers.

Heavy-weights

It is now very seldom that one sees the real heavy-weight rubber-driven model aeroplane, because, to-day, there are so many small power plants available. These are so much more suitable than rubber for this class of work, that a heavy-weight model is seldom contemplated without a mechanical power plant in view. However, some interesting machines make their appearance from time to time, and they may still be considered a live branch of the pastime.

Spruce and birch are, or course, the main materials used in construction, and these models are invariably covered with silk or bamboo paper. The quality of flight is good, but naturally, the duration is not much longer than that of the motor run, as, omitting exceptional cases, not much can be expected in the way of soaring flights. Usually two or more skeins of rubber are geared together, as a fair amount of power is required to fly these machines.

As may be imagined, the heavy-weights fly relatively fast, and the greatest problem is to ensure a good landing. This landing question is apt to lead one into a vicious circle. An attempt to strengthen a machine to withstand fast landings usually results in added weight, which, in turn, causes the machine to land yet more speedily. Thus, an almost unending competition between speed and safety often ensues, the speed, alas! usually winning in the end.

Power Models

This term, to-day, usually means a model powered by a small petrol engine, and for this reason power models constitute quite a distinct branch of model aeronautics, with separate problems of design and construction of its own.

While it is as well to leave the power class of model aeroplane until a great deal of proficiency has been obtained in the making of the other types, no aeromodellist has tasted the full joys of his pursuit until he has experienced the thrill of beholding his own power-driven model aeroplane in full flight. The flying and behaviour is so much like that of the real thing, that the constructor of a successful power-driven heavy-weight may truly be considered to have "won his wings."

CHAPTER IV

WINGS

Every part of a model aeroplane is important, in so far as no model will function without all its essential components. If any part, however, can be considered of more import than another, surely it is the wing. In view of this, it is surprising how little attention some aeromodellists pay to the design of this most fundamental accessory, especially in the matter of wing section. It is true that aerofoil section does not seem to be of such critical importance on models as it is on the full-sized aeroplane, probably because so many other factors contribute to a model's performance that the relative efficiency of one wing section compared with that of another is, as it were, swamped in the general behaviour.

In spite of this, wind-tunnel experiments conducted with models in connection with full-sized aeroplanes, show that a model aerofoil is governed by the same laws, and reacts to the same conditions, as its full-sized counterpart. This being so, it would seem beneficial to select a wing section which has the best characteristics for our purpose. Now, the most desirable feature which a wing can possess, from our point of view, is its non-stalling property, and we shall do wisely to turn to the result of full-sized practice in selecting an aerofoil for our models. In a study of the characteristics of the hundreds of sections available, two stand out as possessing great non-stalling qualities, in other words, they will accommodate themselves to a considerable change in flying incidence without stalling. These are the " Clark YH " and " R.A.F. 28 " sections. Almost all constructional articles on model aeroplanes state that the wing section is " roughly Clark Y," and as fully fifty per cent. of aeromodellists have never troubled to find out just what a " Clark Y " section really is, the various interpretations may be better imagined than described.

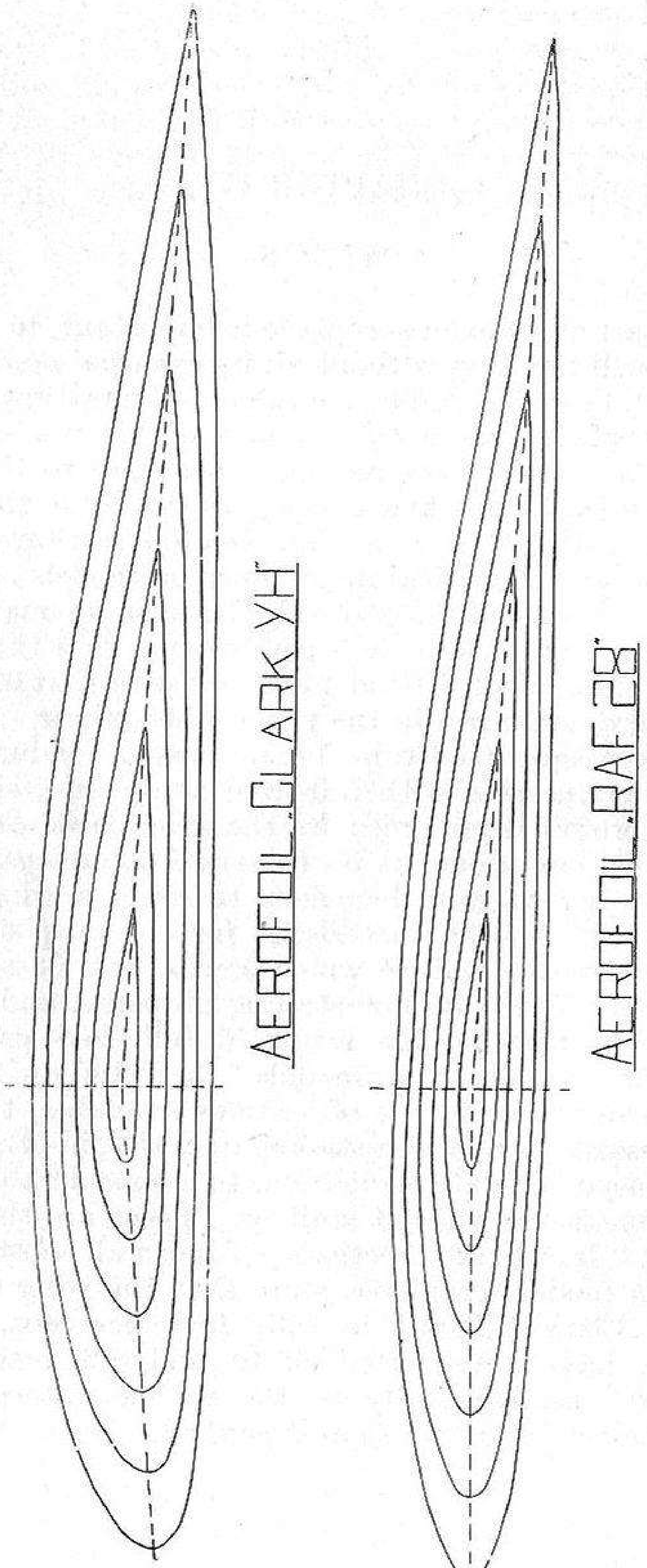

Fig. 25

That the reader of this book may become acquainted with these most useful wing sections if he is not familiar with them already—we give, in Fig. 25, full-size templates of both, in sizes from six inches to one inch. We are aware that other useful sections exist, but, as it is impossible to give them here, it will be left for the experimentally minded to discover them for themselves.

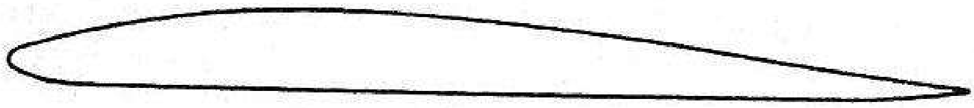

LOW LIFT WING SECTION

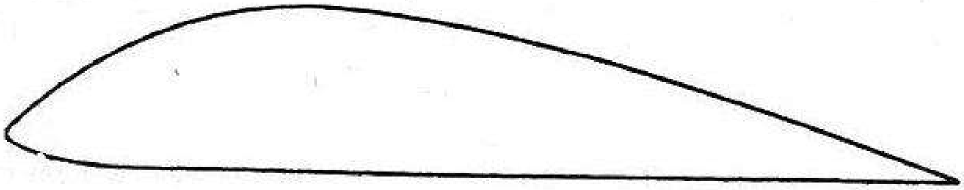

HIGH LIFT WING SECTION

Fig. 26

The two illustrations in Fig. 26 show respectively, the thick, " high-lift " wing section and the thin, " low-lift," high-speed section. As its name implies, the thick section is capable of exerting more lift, at a given speed, than the thin aerofoil, and the reader will easily see the reason for this in the light of our remarks in Chapter I. Strangely enough, the very high-lift aerofoil is of little use in rubber-driven model work, as not only is the drag or resistance very high, but the position of the centre of pressure varies greatly with the angle of incidence, thereby increasing the liability to stall. On heavily loaded power-driven models the high-lift has its uses, when it is desired to keep the flying speed low. With rubber-driven machines the initial burst of power and subsequent great speed of the model, makes the high-lift aerofoil unsuitable. On the other hand, the constant power-

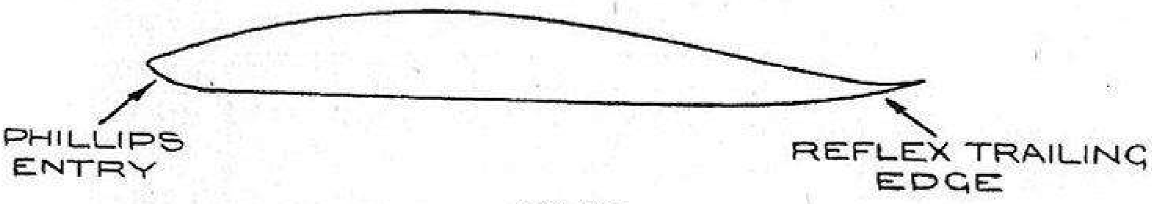

Fig. 27

output of the petrol engine offers no complications in this respect.

Fig. 27 shows a wing section illustrating the meanings of two terms often used when speaking of aerofoils : " Phillips Entry " describes the particular type of leading edge shown in the drawing, while the turned-up trailing edge is known as a " Reflex Edge," the advantage of which is that it limits the travel of the centre of pressure caused by an alteration in the flying angle. It is, therefore, helpful in preventing the wing from stalling.

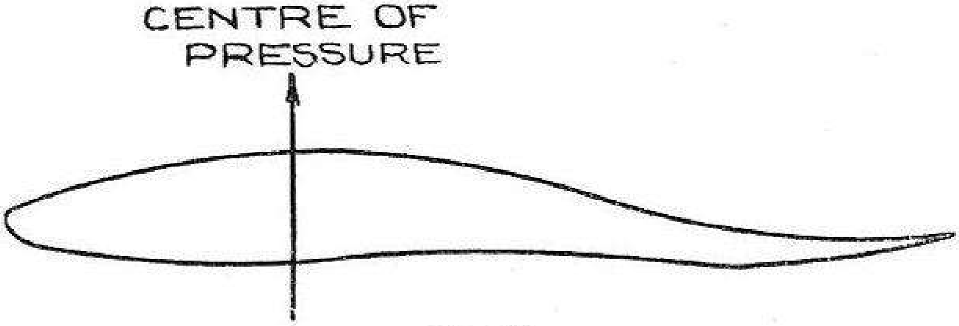

Fig. 28

In rubber-driven model work it may generally be considered that a thin, low-lift section is preferable to the high-lift type, and that a Phillips entry and reflex trailing edge may often be usefully incorporated. A concave undersurface improves the glide, but do not overdo this as there are other factors to be considered. The concave portion should commence behind a point vertically below the centre of pressure, as shown in Fig. 28.

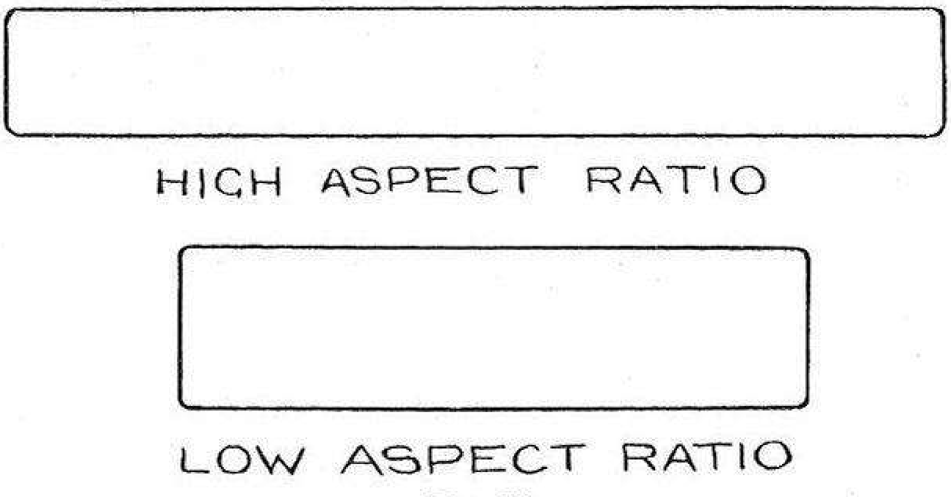

Fig. 29

The distance from wing-tip to wing-tip is known as the " span," while the width of the wing is called the " chord."

The ratio of chord to span constitutes the "aspect ratio"; thus a wing with a 42-inch span and a 7-inch chord would be said to have an aspect ratio of six (see Fig. 29).

Following theoretical considerations, it has been found in practice that wings of comparatively large aspect ratio perform better than those of small ratio, especially on model gliders, where aspect ratios of as large as 20 to 1 are being employed. Such large ratios, however, create complications when applied to powered model aeroplanes, and they should be in the region of from 6 to 10 to 1—say about 8 to 1.

The superior performance of high ratio wings lies, briefly, in the fact that the leading edge of a wing, or rather that portion of the wing which lies nearest to the leading edge, is more efficient in producing lift than the portion nearer to the trailing edge. Lift is only produced by the reaction of the wing upon the air, and the air is more affected by the leading edge of the wing than by other parts.

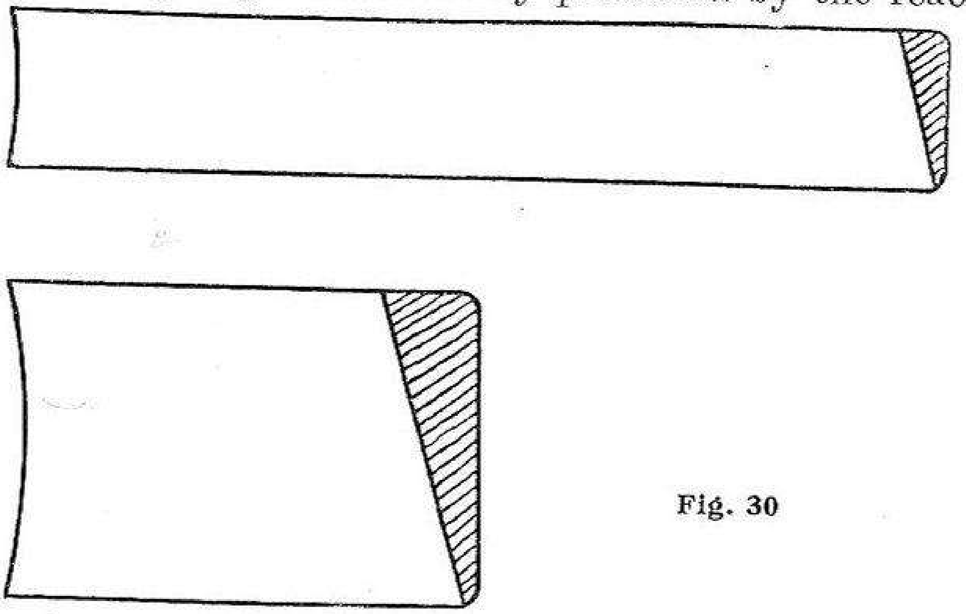

Fig. 30

Among other considerations which also prevail, one of the most important is shown, diagrammatically, in Fig. 30. Here we see two wings, one of high aspect ratio and one of low, the area being, in each case, the same. On all wings there is an inefficient area at the tips, due to the air spilling over at this point. The diagram shows this inefficient area as a shaded portion, and it is obvious that a larger proportionate area is ineffective in the broad, short wing than in the one of high aspect ratio. A secondary beneficial effect is that the stabilising influence of dihedral is greater owing to the levelling tendency of the outer wing portions acting through a considerable lever. This effect may, however, be somewhat discounted by the fact that the disturbing influences also have the advantage of this leverage.

In spite of the above, many good model 'planes have been built with lower aspect ratios than those stated, even ratios as low as four or five to one performing satisfactorily. Probably other factors react in the favour of the lower ratio model wings. These may be connected with the drag, or with the comparatively low flying speed of the model aeroplane. Also, with very high aspect ratio wings, too much air may be disturbed for such small wing loadings.

Some plan forms of wings are given in Fig. 31, marked " A " to " E," while " F " and " G " show two front elevations. These, of course, only outline the general characteristics of the various types in use, as there are dozens of possible combinations and varieties. The simplest type is the plain rectangular wing marked " A," with a constant section as in " F." The chief merit of this type is ease of construction ; all the ribs being of the same width and section. These wings perform quite well ; their main disadvantage is that, owing to the parallel arrangement of the main spars, no triangulation of these can be utilised. This makes them rather weak, especially in large spans. A further disadvantage is that directional stability is lacking.

A much better arrangement is presented by " B " in combination with " G." This class of aerofoil tapers in both plan and thickness which results in great strength ; the spars tapering in accordance with the load which they must carry. At the wing root the triangulation is deepest, and, as it is here that the load is greatest, this forms an ideal arrangement. Furthermore, the centre of the area of a tapered wing is nearer the wing-root than in other types, thus the bending effect of the air load is considerably lessened. This means that wings of large span and high aspect ratio may be constructed quite satisfactorily, with the minimum danger of wing flutter when in flight.

In the diagram marked " C " the wing is tapered only on the front edge, and this method is quite satisfactory. Diagram " D," on the contrary, indicates a wing tapered on the trailing edge only.

This arrangement has become increasingly popular, although directional stability is lacking.

Tapered wings have a distinct tendency to directional stability, the operation being exactly similar to that of the swept-back wing described in Chapter III. They are slightly more difficult to construct than the parallel type, owing to the wing ribs being of different sizes; but as an easy method of cutting these will be described later, there is little to bother about on this score.

Swept-back wings, though presenting certain constructional difficulties, are remarkable for their stability. Not only are the directional properties great, but they have a marked effect on the longitudinal stability of the model. Tail units may thus be made smaller and consequently lighter, and owing to the centre of pressure being situated well back, the wing may be placed farther forward on the fuselage. This is a great help in obtaining the correct balance of the aeroplane.

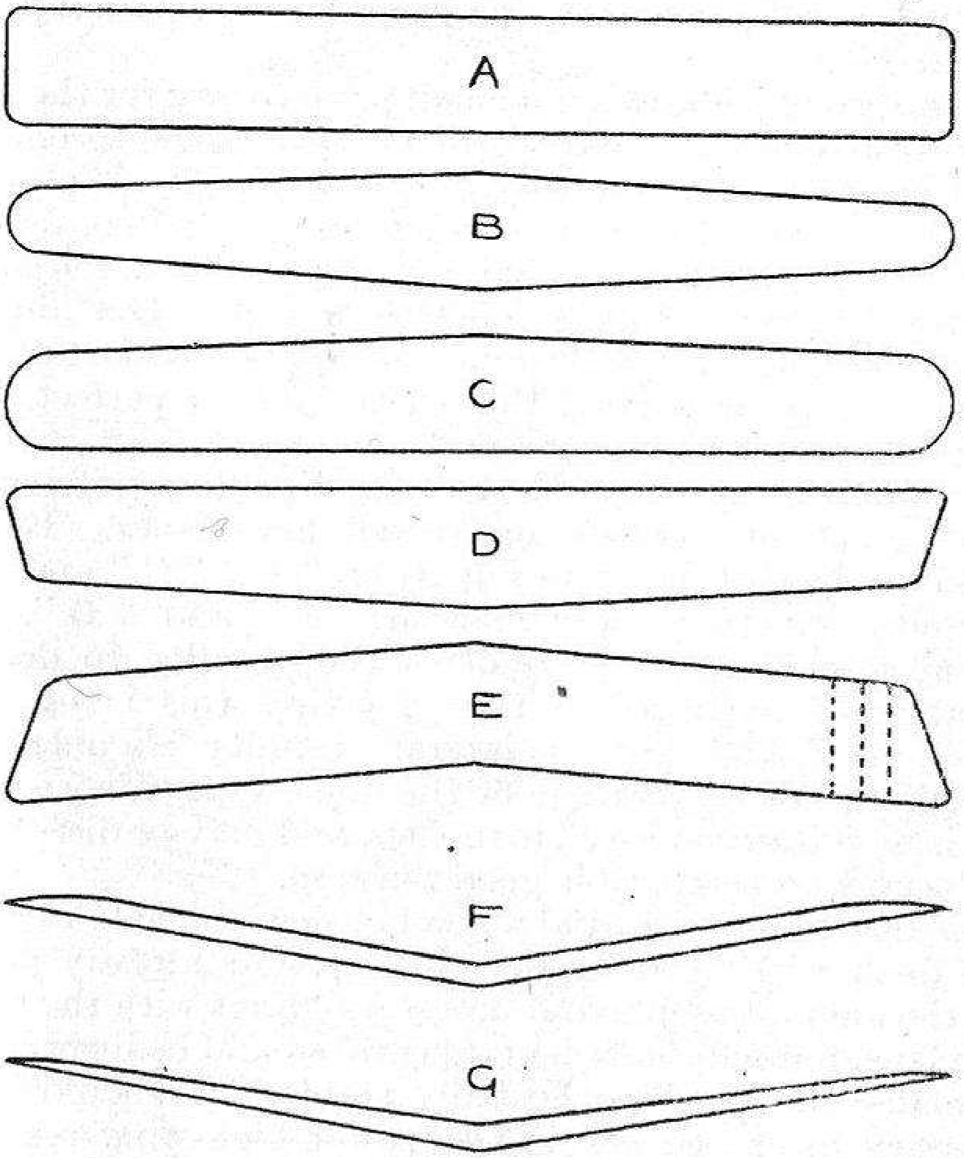

Fig. 31

Against these manifest advantages may be set the fact that swept-back wings offer more difficulties in construction, as two angles—those of dihedral and sweep-back—must be incorporated. This tends to complicate the centre wing section, and forms the main reason why they are so seldom seen on our model flying fields. Also the effective area of lift is lessened, as two dihedral angles are incorporated, and the reader will remember our remarks on this subject in Chapter III.

These two objections are a small price to pay for the benefits bestowed, as the greatest difficulties in model aeronautics are connected with stability. The secret of a successful pursuit of our hobby lies in compromise, and it is useless to build a model incorporating all the finest aerodynamic features if it will not fly in a stable manner. Our object is not to construct a model as an example of perfect theory, but to modify and blend this theory into a perfect flying machine.

In practice, the shape of the wing-tips does not seem to be of great importance on model aeroplanes. Broadly speaking, the tips shown in Fig. 31 on " B," " C " and " E " are quite suitable; those marked " A " and " D " being the most inefficient. It is often the practice to decrease the angle of incidence of the wing-tips, this being called " wash-out," and greater lateral stability should result. " Wash-in," or an increase of the angle of incidence at the tips, is not often employed in models, and may be disregarded as it serves no perceptible good purpose.

The question of dihedral angle between the half-wings has been dealt with in an earlier chapter. As already pointed out, the amount of dihedral necessary varies with the type of aeroplane, but only sufficient dihedral should be incorporated to render the machine laterally stable. It should not be necessary to exceed one in twelve for high-wing machines, or one in eight for the low-wing types.

In the illustration marked " E." in Fig. 31, the wing ribs are indicated by dotted lines. It will be seen that these are set parallel to the direction of flight.

Construction

The actual methods of wing construction employed vary greatly, according to the type of wing or machine it is desired to build. A description of every arrangement of ribs and spars is obviously impossible, so one or two of the more usual and satisfactory will be described.

Plywood ribs are seldom used in any but the heaviest of power-driven models, except, perhaps, for centre sections. As a goodly number of ribs is usually employed in any wing construction, each individual rib has to withstand very little strain, and quite frail materials may be successfully used.

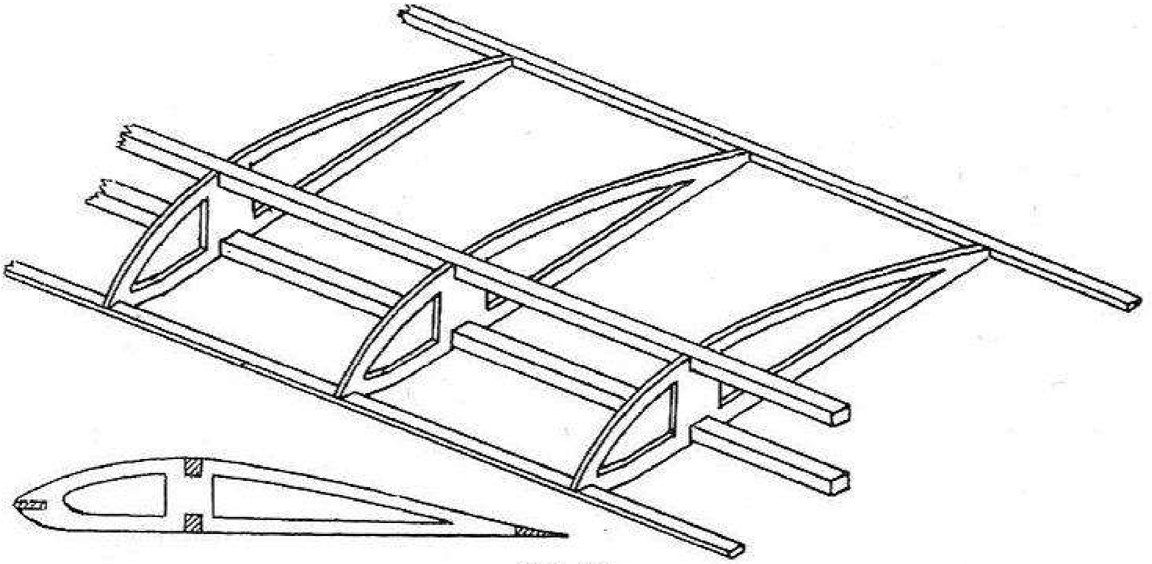

Fig. 32

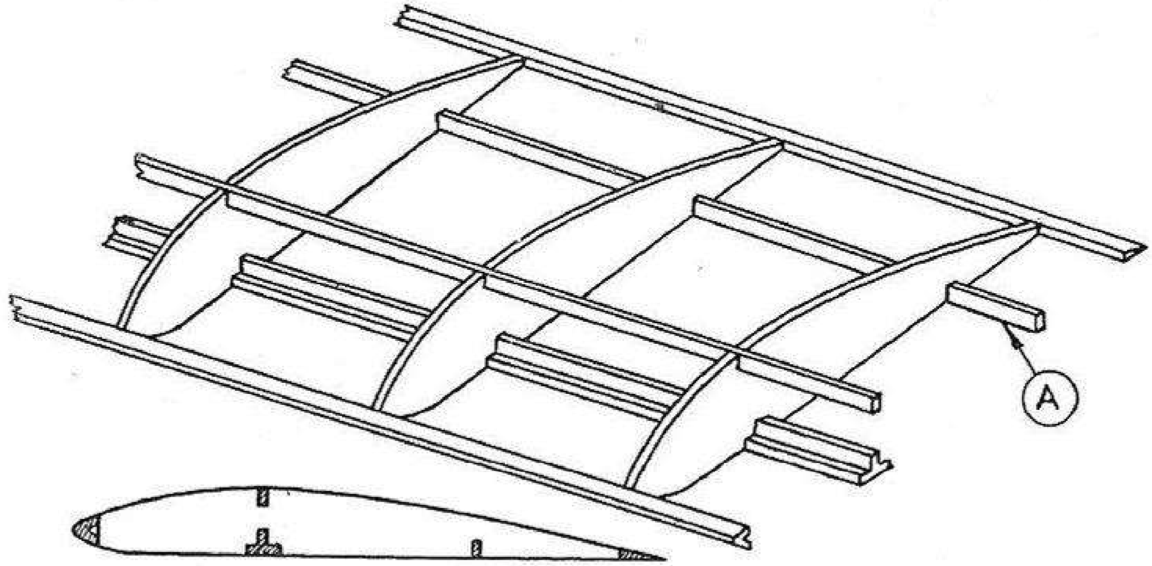

Fig. 33

A wing embodying plywood construction is shown in Fig. 32, together with a possible arrangement of spruce or birch spars. This type of square spar construction is not to be recommended unless the wing tapers considerably in section, as constant section wings of this type are extremely liable to break at the root of the top spar. However the model-maker who has progressed far enough to tackle a machine calling for plywood-rib construction, should have a sufficient knowledge of the problems involved to be able to solve them for himself.

The universally used balsa rib construction is well illustrated in Fig. 33, which also shows a very good spar arrangement. In this method the square section main spars are replaced by a " T " spar in the lower position and a top spar of rectangular section. The leading edge may be of " V " or even of round section, while the trailing edge is of triangular strip. The reader is advised to refer to the illustrations of wood sections in Fig. 5 in Chapter II as we shall be touching upon the practical applications of these. The small spar marked " A " in the illustration in Fig. 33, is particularly useful in silk covered wings, where the contraction of the doped silk often tends to bend the ribs at this point.

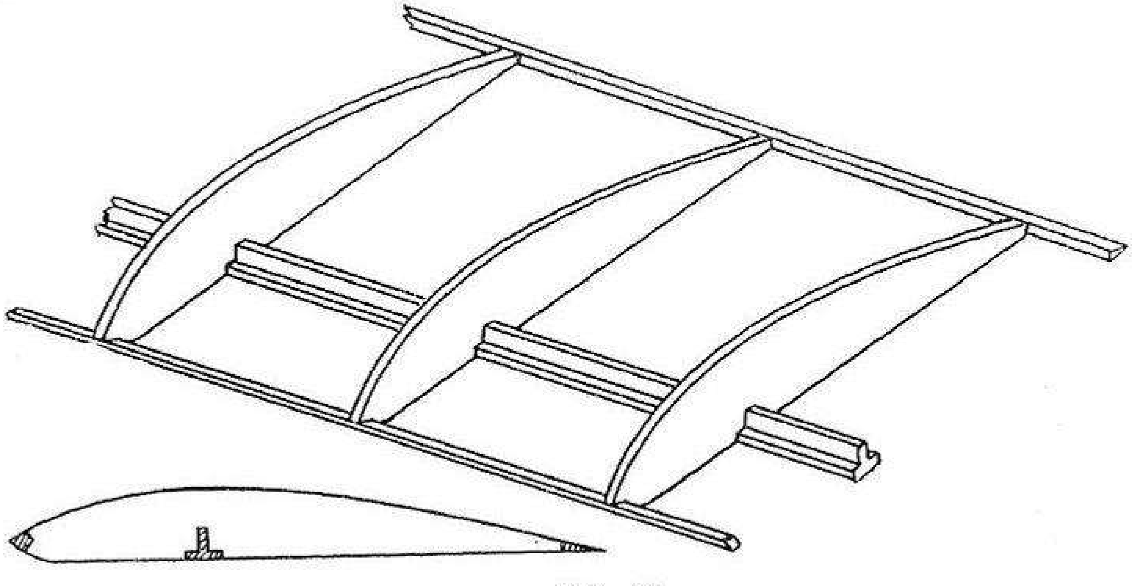

Fig. 34

The construction shown is extremely strong and is suitable for quite large spans in an all-balsa construction. A sectional drawing is also given of a method of assembly, and it will be noticed that the leading and trailing edges are simply butt-glued to the ribs, this being quite strong enough for all ordinary purposes.

Spruce or birch spars may be substiuted as the requirements of strength may dictate, or certain spars may be lightened or omitted altogether for the very light types. A wing thus simplified is shown in Fig. 34, where the top spar and the spar marked " A " in Fig. 33 are removed and square section balsa *on edge* is substituted for the heavier

"V" section front spar. This construction is suitable for wings up to 36 inches span.

Very light wings for balsa models may be made on the lines suggested in Fig. 36, where the main spar is of simple flat strip section placed on edge; the front spar is of similar type, and the usual triangular section is used for the trailing edge. This is quite sufficient for light duration 'planes, as the strength of all wing structures is considerably increased by the doped covering. The added strength given by covering should always be allowed for in the design of main planes, as this amounts, in some cases, to as much as 50 per cent, No great advantage is to be gained by excessive strength. which usually denotes that the model could have been made lighter with a resultant increase in performance.

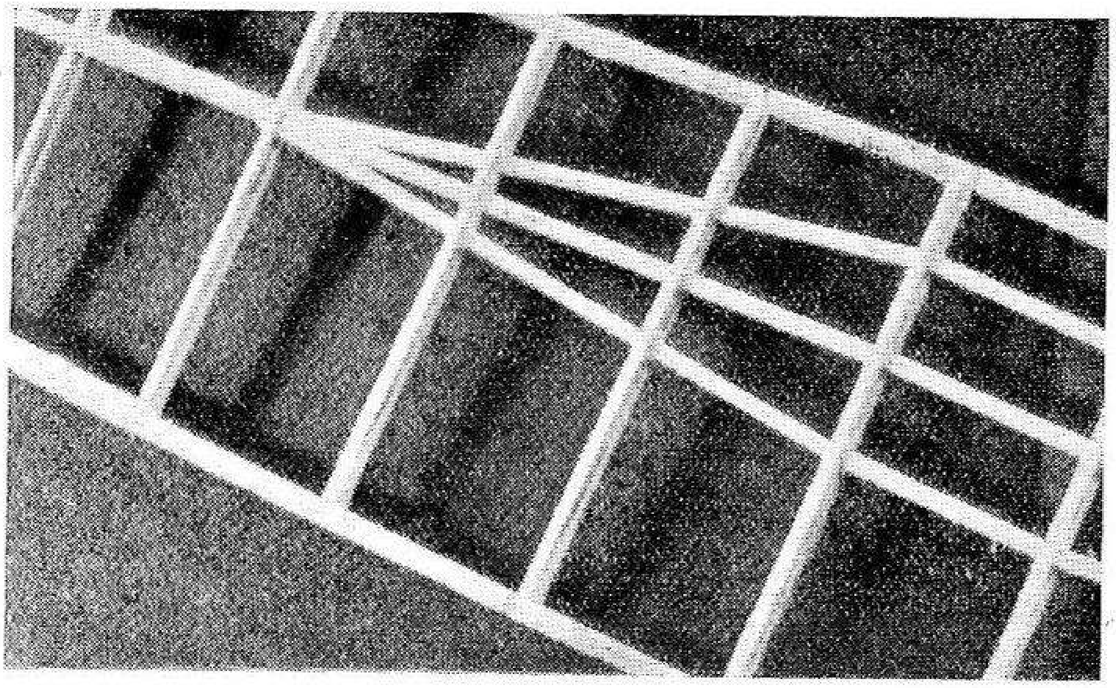

Fig. 35.—Wing construction, showing rectangular spars inset into ribs. Note triangular bracing at root

If added strength is required at the wing roots it is a good plan to build up the main spar to the depth of the ribs for a distance or two or three inches. This is indicated by the shaded portion in Fig. 36, which also illustrates the use of corner blocks as a method of reinforcing. Two or three such blocks, cut from balsa sheet, and placed at intervals along the wing, give a great deal of strength without much added weight. These blocks should be a good fit, and may have the inside corner removed, as shown in Fig. 36, as a help to this end.

Use as many wing ribs as are compatible with the design and weight of the model under construction. A large number of 1/32nd inch balsa ribs are better than a few ribs of $\frac{1}{8}$-inch balsa, both from the point of view of strength and as an aid to the correct maintenance of the wing section. On wings of few ribs the covering is apt to sag in the spaces between, thus destroying the aerofoil section. If lightness is aimed at, half ribs, as shown in Fig. 38, may be incorporated to support the covering at these points. This diagram also

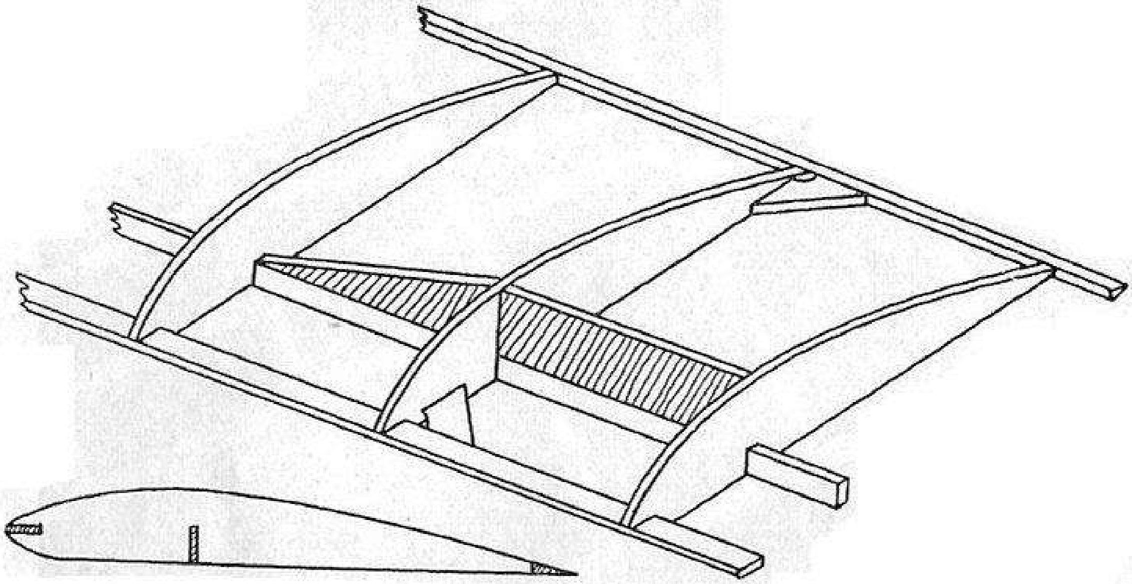

Fig. 36

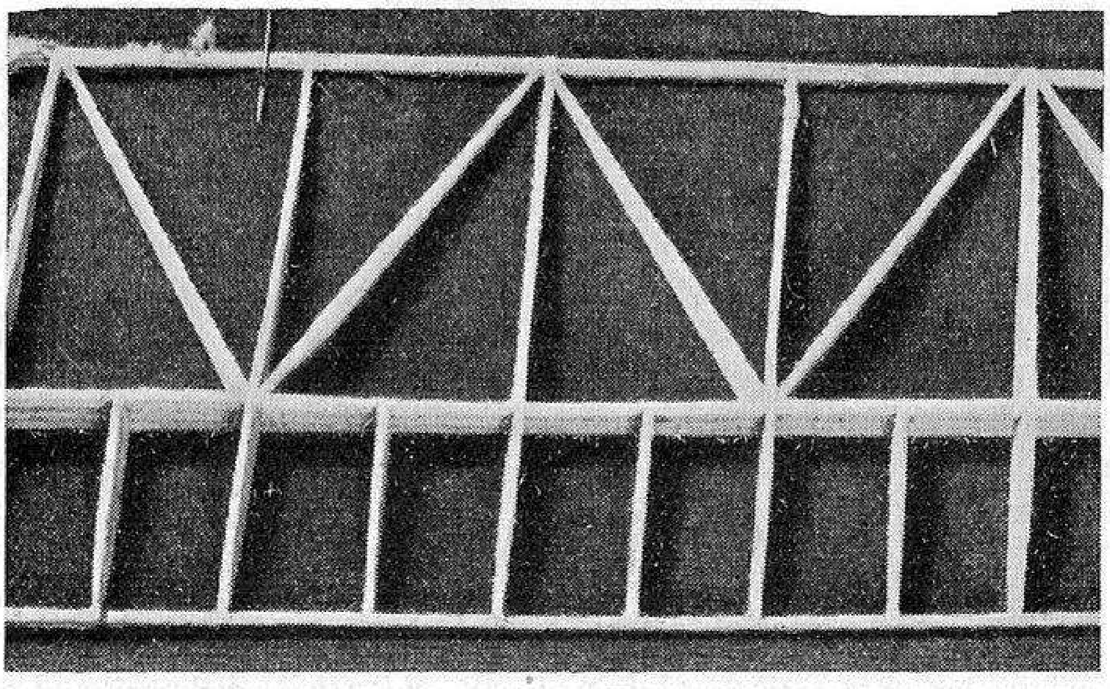

Fig. 37.—Showing main "T" spar built up to depth of ribs; also shows half-ribs and cross-bracing to trailing edge

indicates a useful method of bracing the wing structure with triangular pieces of balsa placed between the main spars and the trailing edge. It is not always necessary to brace between each rib ; every three or four often being sufficient.

Gull-wings (Fig. 40), are really a variation of the parasol type, and any aeroplane which incorporates this design is subject to the same conditions as the parasol. The object is to place the centre of gravity low and thus ensure lateral stability. Gull-wings are apt to be fragile owing to the

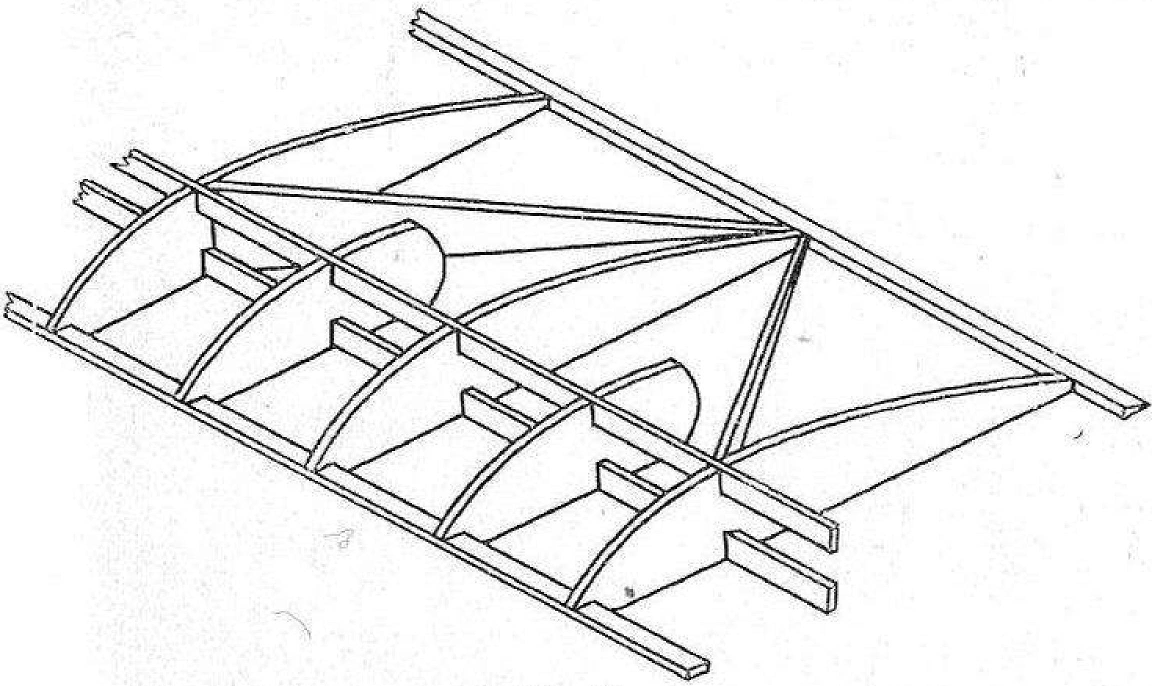

Fig. 38

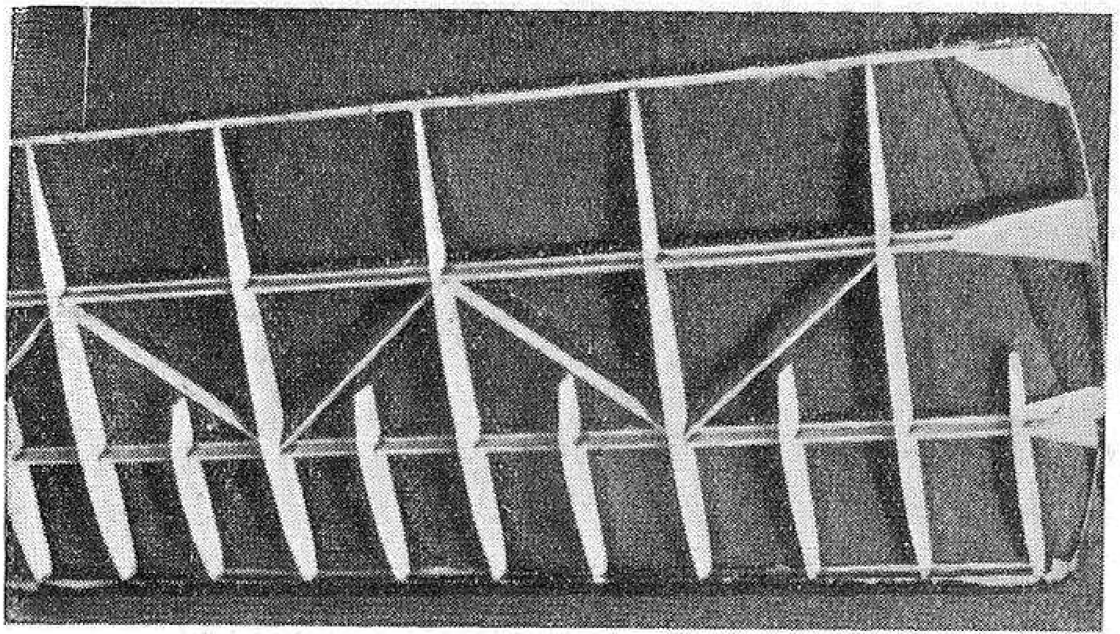

Fig. 39.—Illustrating use of two "T" spars, half-ribs and an arrangement of cross-bracing

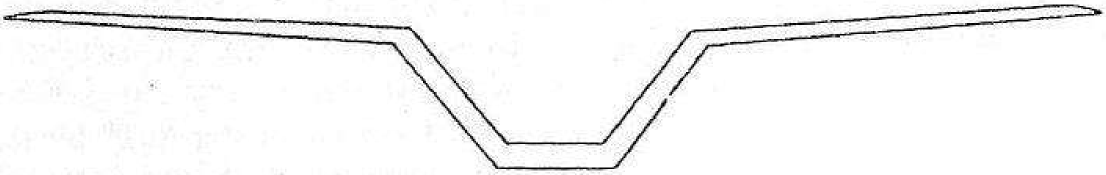

Fig. 40

difficulty of obtaining sufficient strength at the angle in the wing. For the benefits offered, they appear to demand too much in the way of constructional difficulty.

A design which has found some favour in America and has been, to a small extent, followed in this country, is that illustrated in Fig. 42. In this arrangement, lateral stability has been attained by incorporating most of the dihedral at the wing tips. In spite of the almost flat centre portion, the effective lift is little different from the more usual types, as what is gained by the flat section is lost by the exaggerated dihedral of the tips. On the whole, this arrangement may be a little more efficient from the view point of lateral stability, owing to the levelling tendency exerting its

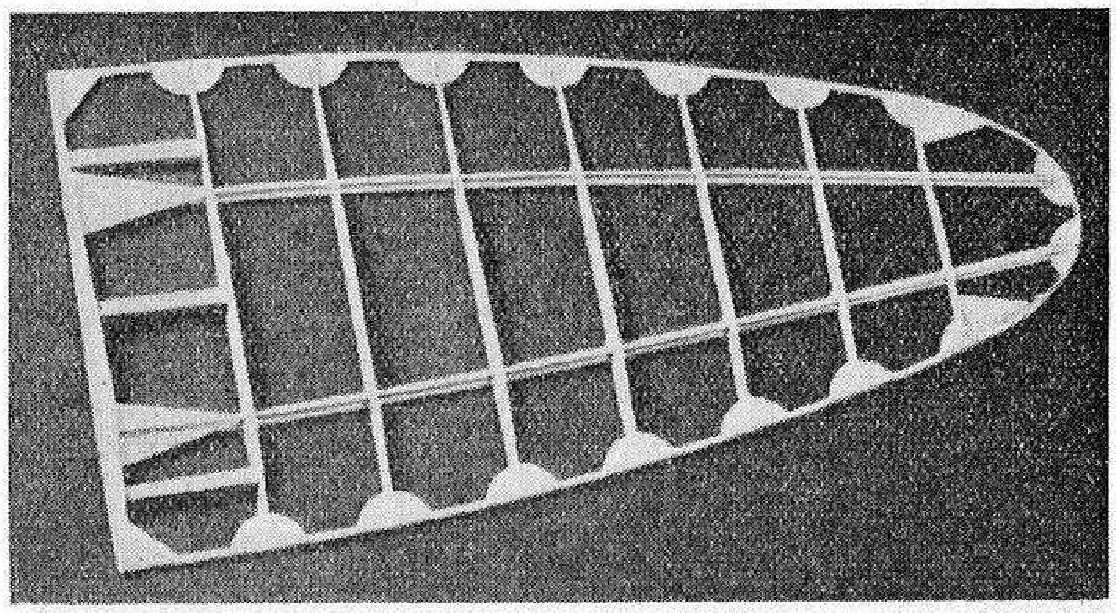

Fig. 41.—Low aspect ratio wing, with two "T" spars. Note wing-root reinforcement, and use of gummed paper discs to strengthen joints of ribs, and leading and trailing edges

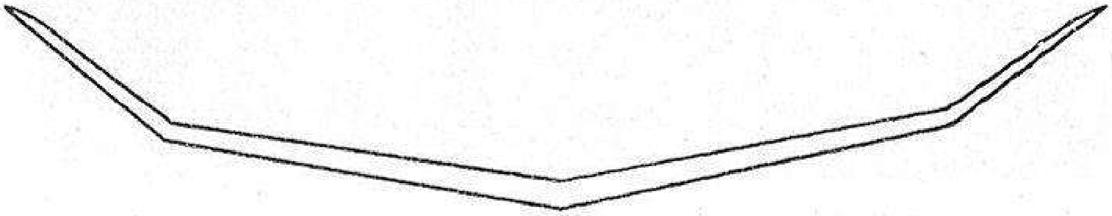

Fig. 42

influence through a long lever. Here again, constructional difficulties seem to discount the small advantage, although they seem particularly suitable for gliders.

Wings tapering in plan only are seldom used ; a tapering of both plan and thickness being preferable. This means that the ribs required must decrease in size at a uniform rate from the wing root to the tip. It is, of course, possible to set out each rib to its respective size on a sheet of balsa, and cut out separately, but this is a very tedious method, which leaves much scope for error. There are two other ways of doing the job which are superior from all points of view. A popular method is to shape a suitable block of balsa as shown in Fig. 44. The larger end is cut to the size and shape of the largest rib, and the other end conforms to the smallest rib required. The ribs are sliced off afterwards, the thickness of each rib and the number required determining the width of the block.

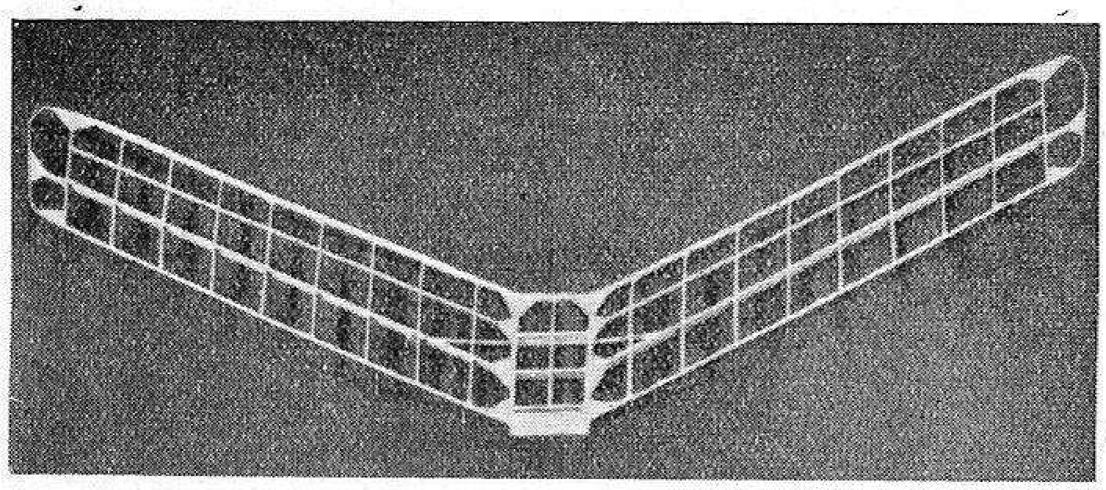

Fig. 43.—Swept-back wing, showing balsa corner blocks, and dihedral keeper across centre section

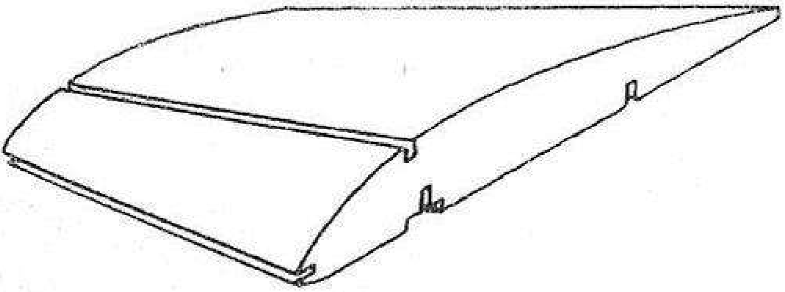

Fig. 44

An alternative method is to make two plywood templates ; one to the size of the largest rib, and the other to the dimensions of the smallest. Between these two templates pieces of balsa are clamped (the number being determined by the number of ribs required) and are held together by lengths of screwed brass rod and nuts, which are passed through holes suitably drilled in the templates and balsa strips. The pieces of balsa are then pared down to conform to the templates, the slots for the spars cut, and the whole finished off with sandpaper used on a wide rubbing block. This second method (Fig. 45) is very accurate, and although entailing a little more preparation than the first, is well worth the trouble, especially as the templates may be kept for use at some other time.

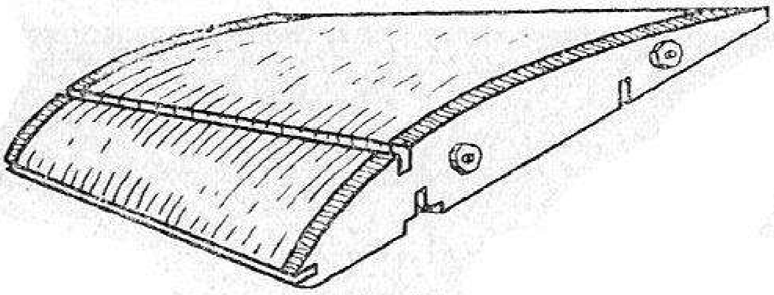

Fig. 45

Suitable thicknesses of balsa ribs for wings of various spans are as under :—

Wings up to 20 inches span	1/32nd inch.
Wings from 20 inches to 40 inches span	1/16th inch.
Wings from 40 inches to 60 inches span	3/32nd inch.
Wings above 60 inches span	$\frac{1}{8}$ inch.

Balsa ribs of $\frac{1}{8}$ inch thickness are strong enough for the largest model with which the reader of this book is likely to be concerned.

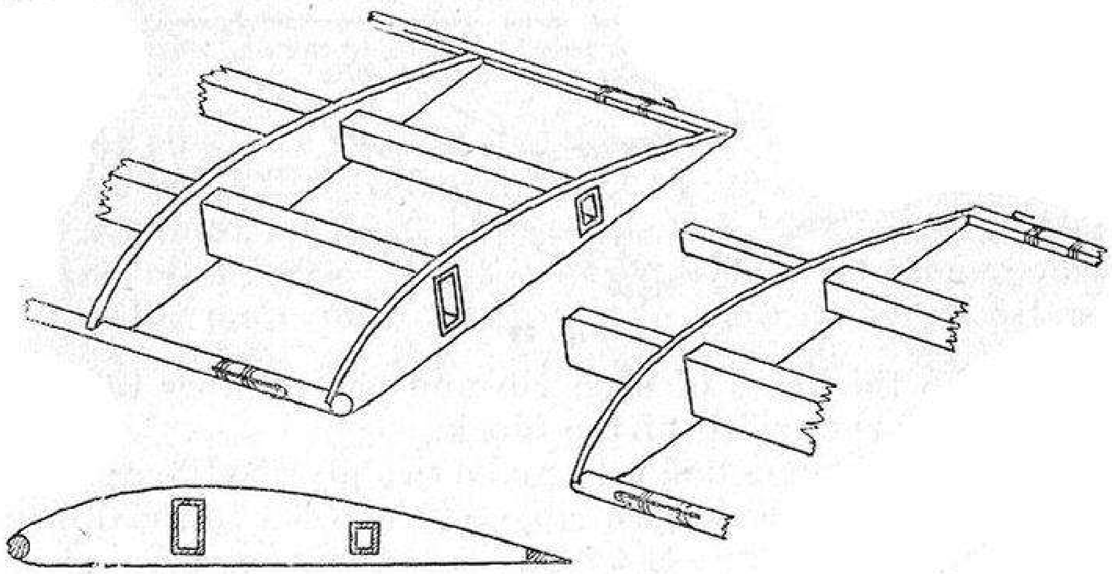

Fig. 46

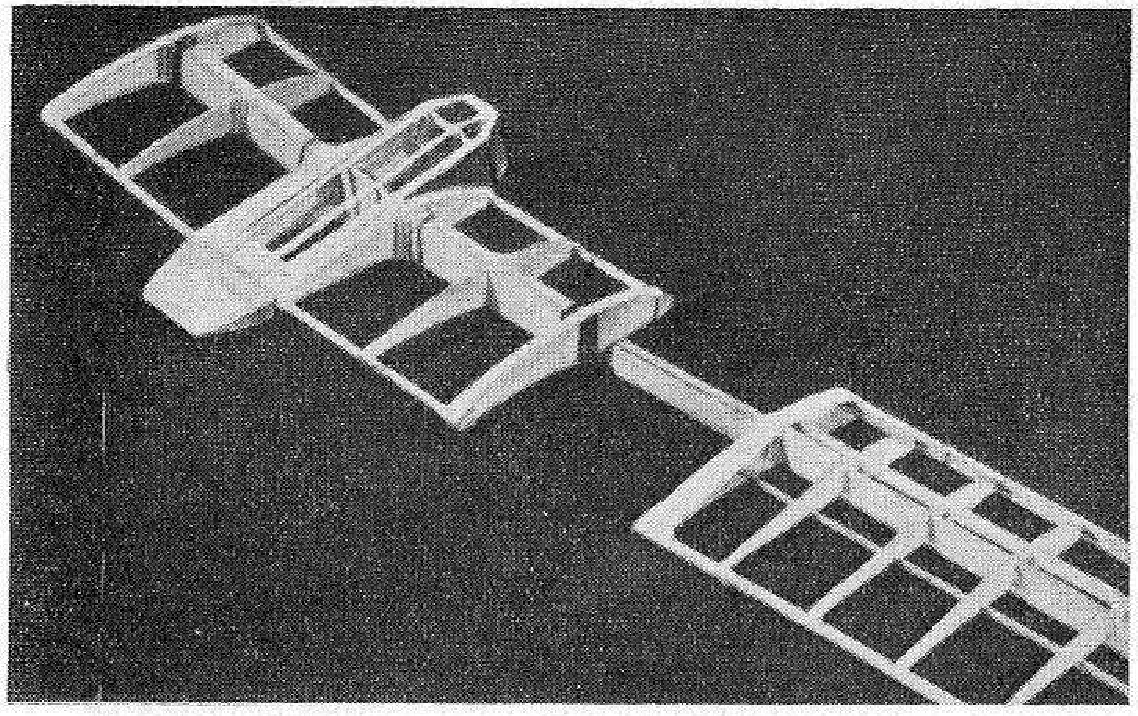

Fig. 47.—Plug-and-socket wing fixing. The centre box spar is built into a cabin structure, which may be moved along the fuselage top to obtain flying trim

The ribs for wings of constant chord and thickness are easier to make than those for taper wings, and are usually cut out from balsa sheet by the aid of a zinc or aluuminim template. This template is held firmly down upon the wood which is then cut with a safety razor blade around the edge of the template. Swept-back wings are often of uniform

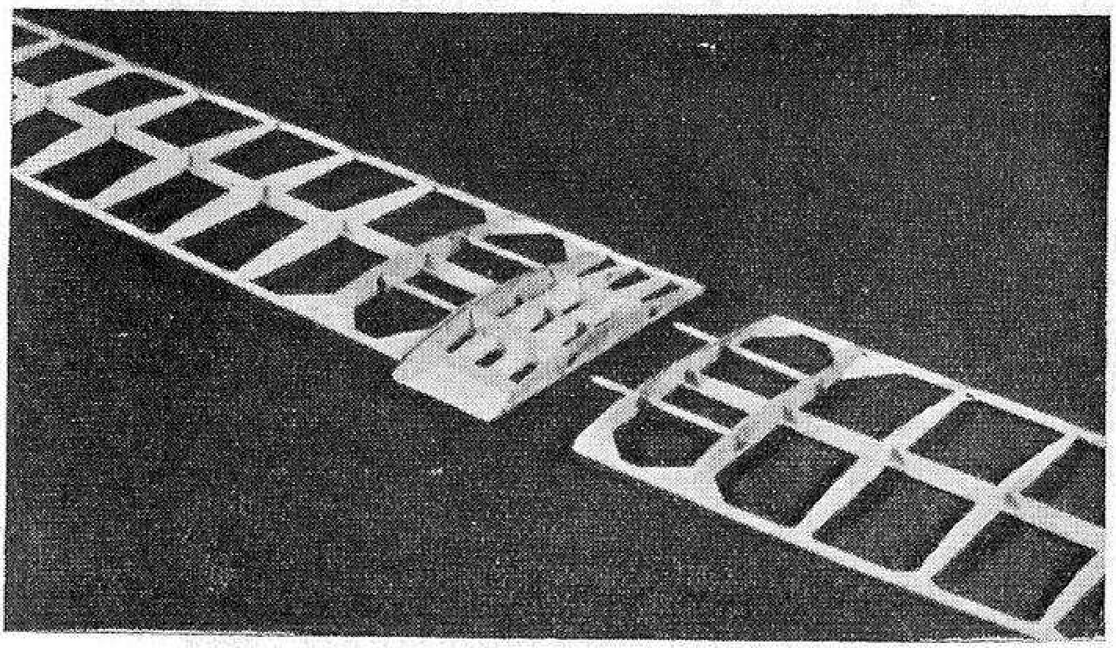

Fig. 48.—Detachable wing, making use of birch dowels. Note strong centre section

section, although it is better from the point of view of strength, to taper them in thickness.

The use of box spars in model wings is mostly confined to the larger types, as the depth of the ribs will seldom allow room for a box spar of reasonable depth to be accommodated. Where this is possible, however, they are to be greatly recommended, as they are of exceptionally strong section. Their suitability is further enhanced by the fact that large wings, for the sake of portability, must usually be made in sections, and the box spar lends itself admirably to a simple form of assembly. Fig. 46 shows a suggested method, utilising the plug and socket principle ; the box spar forming the socket as well as doing duty as the main spar. If balsa plugs are used in this arrangement, it is advisable to make them detachable, rather than to fix them rigidly into one side of the construction. This renders them easily replaceable in the event of breakage. The small wire hooks shown affixed to the leading and trailing edges, in the illustration, form anchorages for rubber bands which are used to hold the assembly together.

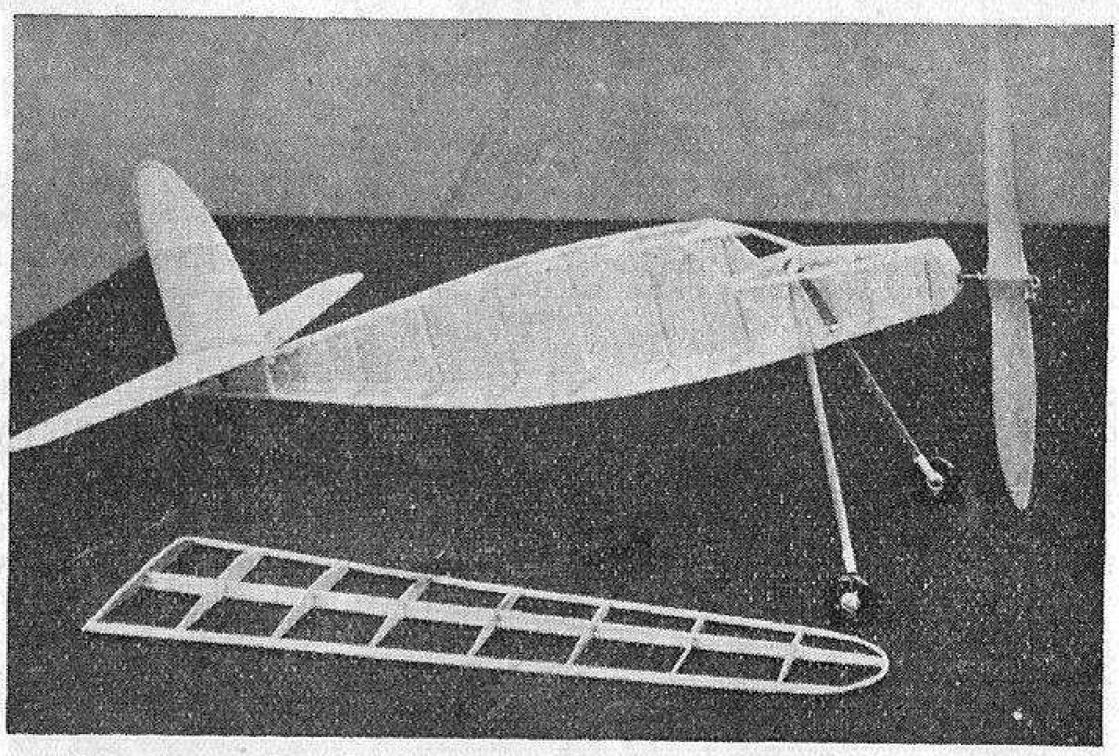

Fig. 49.—Low-wing monoplane of extremely simple construction. Note particularly the simple wing framework

To be useful, box spars must be of a reasonable depth, and few main planes will allow of this. They can, however, be accommodated in quite thin wings if the wing ribs are divided and glued to each side of the spar, but this type of construction is awkward and increases the difficulty of building the wing true.

Wing tips may be constructed of wire, thin birch strip, plywood or balsa sheet. For the heavier models, embodying a mixed construction, the wire, birch and plywood types are very suitable, but in these " all balsa days " wing tips of balsa are often employed. A typical wire or birch tip is illustrated in Fig. 51, and a suggested use of thin plywood or balsa in indicated in Fig. 52. In this connection, thin bamboo splits or reed cane must not be overlooked, as they form wing tips which are light, flexible and strong. They may be utilised in the manner shown for birch.

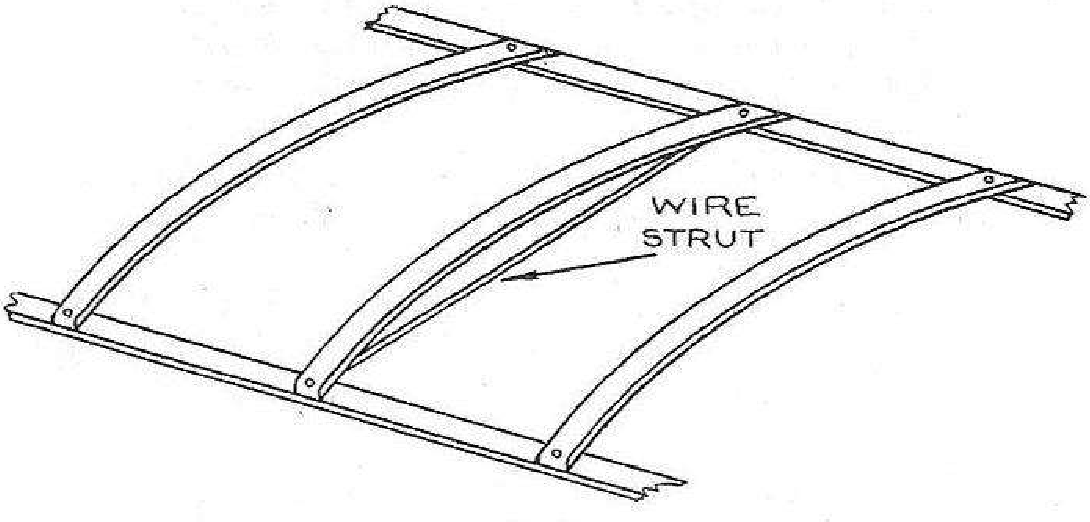

Fig. 50

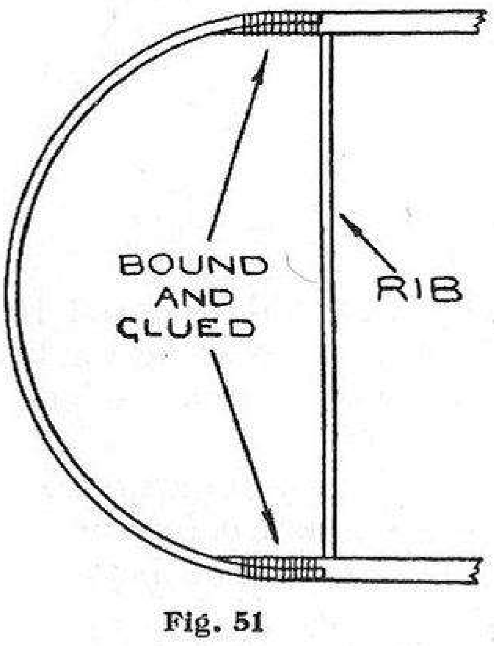

Fig. 51

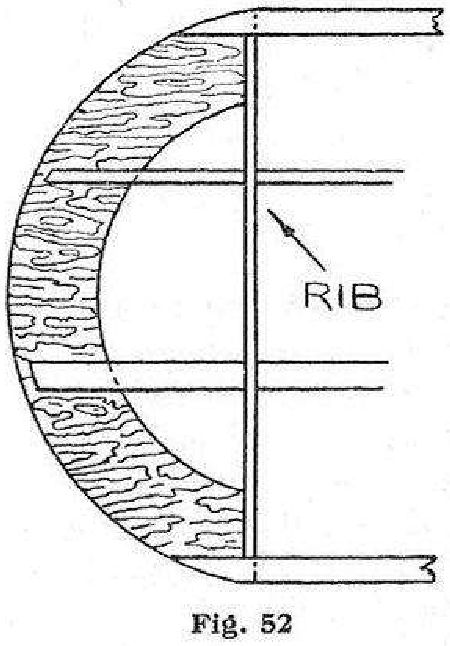

Fig. 52

The single surfaced wing is, of course, the most simple of all, and, while not of the most efficient type, is useful for extremely light, indoor flyers. These simple wings have extremely good gliding properties, and their flexibility not only renders them extremely serviceable, but enables outdoor models to perform in quite high winds. A typical construction is shown in Fig. 50. The frame work of such wings is usually built as a flat structure, the cross-members being steamed to a camber afterwards, and stiffened, here and there, with wire or wooden struts. On the light, indoor flyers, however, these struts cannot be added by reason of the weight. The ribs are, therefore, cut to a curved shape from thin sheet balsa, and are cemented, *on edge*, between the leading and trailing edges of the wing.

Model aeroplane wings should always be built upon a flat board or jig, upon which the design of the wing and the position of each rib should be marked out. The main spars and the leading and trailing edges should be fixed to the board with drawing pins, the leading edge being packed to the required height, and, in the case of reflex edges, the trailing edge also.

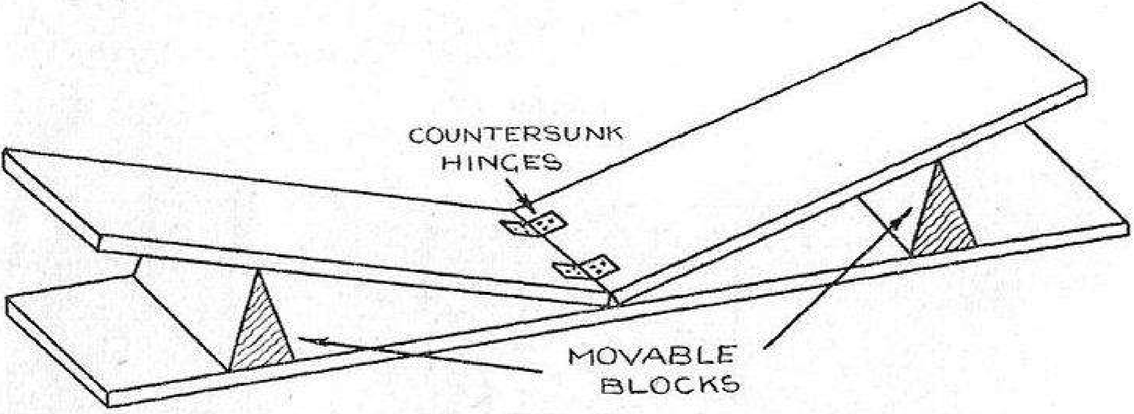

Fig. 53

A suitable jig for use in building wings is shown in Fig. 53; the dihedral being steamed into the spars before assembly. This jig is also useful for keeping wings true between the periods of flying.

Some builders construct the wings on a flat board, the spars running straight from tip to tip, without any dihedral angle. This is put in afterwards by cutting small " V " nicks in the spars at suitable points, steaming to the required angle, and reinforcing the points of dihedral in some suitable manner. Others again, build each half-wing separately, and incorporate the dihedral in a centre section.

Between the various methods employed there seems little to choose ; the first seeming to be the simplest, however. In any case, the important point is that the wing be built on a flat surface, and not removed until the glue or cement is thoroughly set. Never attempt to assemble a wing without this precaution as it is highly improbable that the finished article will be true.

Of the various ways which may be employed for securing the wing to the fuselage one stands out as being by far the most suitable for the majority of machines. This is the simple method of fixing by rubber bands, a system used in 99 out of every 100 model aeroplanes to-day. In this arrangement (Fig. 54) rubber bands attached to small wire hooks on the main plane, pass under the fuselage, the tension of the rubber band holding the wing in position. Besides the merits of lightness and simplicity, this method enables the wing to be moved easily along the fuselage, thus facilitating the attainment of correct flying trim. In the event of a wing-tip landing or encounter with trees or other obstacles during flight, this method of wing-fixing, being only semi-rigid, allows the wing to be knocked out of place

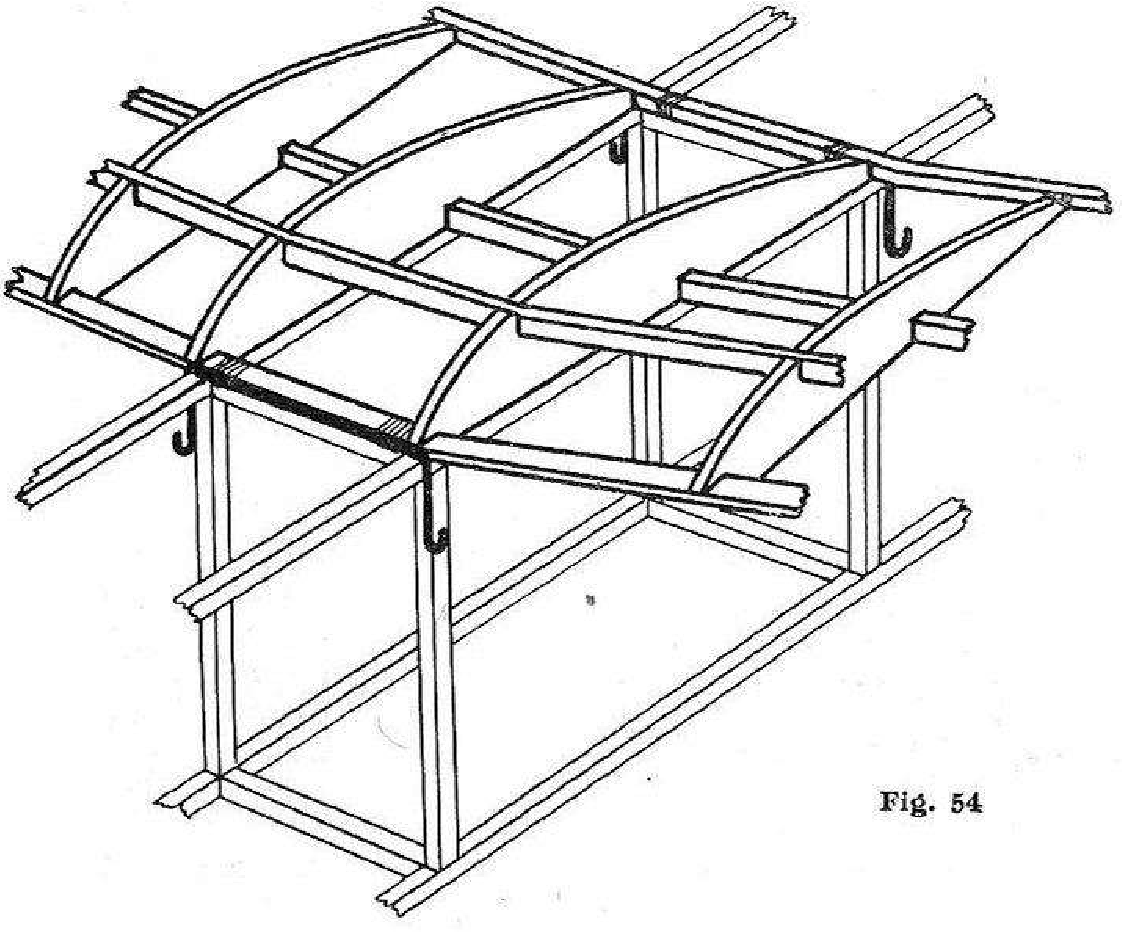

Fig. 54

instead of being broken, as would probably be the result were the wings fixed rigidly to the fuselage.

In place of the small wire hooks shown in the illustration, small bamboo pegs may be cemented to the centre wing section. The rubber fixing bands are then passed under the fuselage in the usual manner, the ends being looped over the bamboo pegs. In some ways, this method is preferable to the wire hook system, as there is then no danger of the hooks tearing the paper covering of the fuselage.

Rubber bands may be used for wing attachment in either high or low-wing monoplanes, and for biplanes, but the mid-wing type does not lend itself to this arrangement. Mid-wing model aeroplanes are, therefore, usually of the "fixed-wing" type, which means that the wings are attached rigidly at a predetermined point along the fuselage, the trim being obtained by the addition of weight to the nose or the tail as the case may require. To avoid the addition of excessive weight, mid-wing machines require very careful design, so that the centre of gravity may be "built in" at the correct position relative to the centre of pressure. Plugging the wings, by means of dowels, into celluloid or rolled-paper tubes, constitutes a very sound method of wing fixing for mid-wing machines. This principle is illustrated in Fig. 89. Alternatively, the wing may be

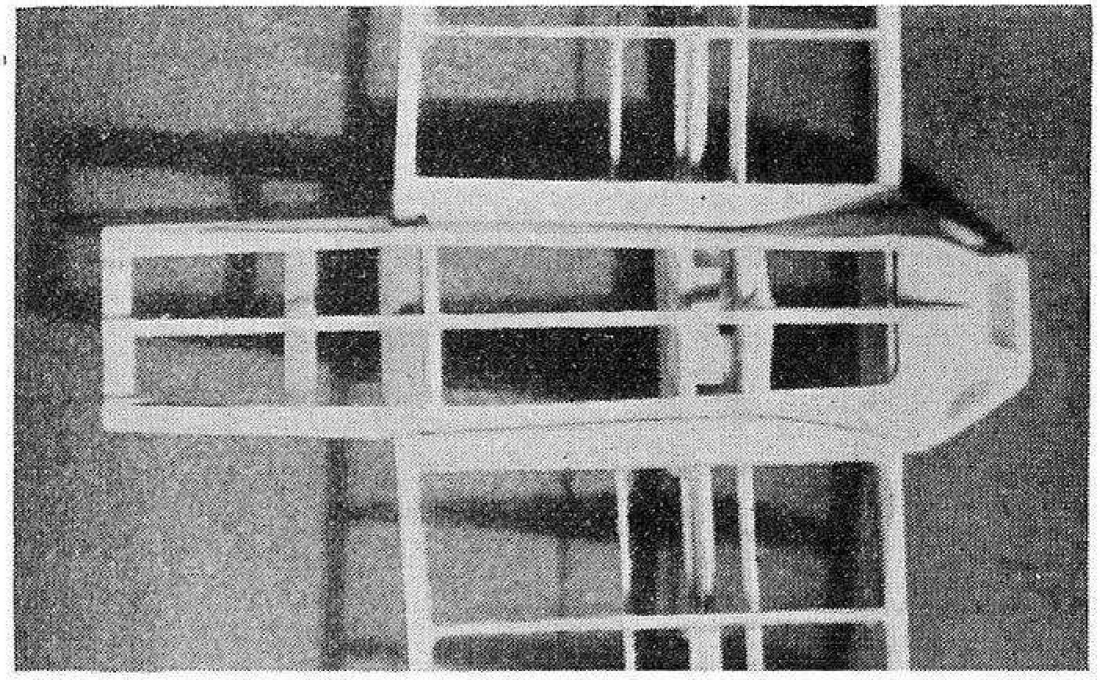

Fig. 55.—An arrangement for non-detachable wings. A movable cabin structure comprises the centre section

mounted on a wire cradle, attached to the fuselage with rubber bands, and capable of longitudinal movement.

The question of incorporating ailerons in the design of model aeroplane wings is one which often troubles the novice, as ailerons play such an important part in the functioning of full-sized aircraft, that it would appear that benefit might accrue from their use in models. A consideration of the actual functioning of ailerons in full-size practice will serve to show that they have little or no utility in model work.

Ailerons usually take the form of hinged flaps situated at a point along the trailing edge, and their function is to provide the pilot with control of the lateral stability of the aeroplane. It is not feasible to control the ailerons of a model aeroplane as the needs of stability may arise in flight, therefore their use is restricted to a preliminary adjustment of flying trim before the model takes to the air. For this reason ailerons on model aircraft seem to constitute an unnecessary complication, as flying trim may be obtained in much simpler ways. However, they have been employed by some model flyers.

Model wings call for careful construction, as in no other part of a model aeroplane is there need for more accuracy and truth. A badly-finished model may perform very well ; an inaccurate one will never do so.

CHAPTER V

FUSELAGES

Of all the component parts of a model aeroplane, none is called upon to perform so many functions as the fuselage. Not only must it form a rigid structure upon which the wing and tail may be placed in their relative positions, but it must house the rubber motor, and be able to withstand the various stresses which this imposes. In addition, it must carry the loads from the wing and tail, and also meet the strains from the undercarriage in take-off and landing. Altogether, it is a very highly stressed part, wherein all the forces acting upon a model aeroplane must converge.

The chief function of a fuselage is, of course, to provide a basis upon which the several component parts may be mounted, and in designing a fuselage for any model this must be the first consideration, as the " line-up " of the machine depends upon it. The other functions are all connected with strength, and as the " line-up " constitutes a distinct problem, it seems the best course to separate the two questions. We shall, therefore, treat firstly of the designs which certain types of models render necessary, leaving the question of strength to be dealt with in the constructional portion of this chapter.

The design of any fuselage will depend primarily upon the placing of the four main forces in the type of machine we may wish to construct. As these forces will be mentioned time and again in this volume, it will be as well to emphasise that they have a real existence, and are not just theoretical notions evolved to make the blackboard look interesting in lectures on aeronautics. To many people it comes almost as a surprise to discover that these forces have any existence outside the pages of a textbook, which fact may account, in some measure, for the curious machines one often sees.

Before proceeding to discuss individual design, it will be as well to consider a few general principles.

More machines give disappointing results through a failure to place the wing, tail and centre of resistance in the correct relationship to the line of thrust than from any other cause. The placing of the tail-plane is most important. The *negative* tail should be placed at an angle of incidence to the main wing corresponding to that of the line of thrust. For normal horizontal flight, which is the condition upon which we have agreed to base our design, it is advantageous to place the tail plane (which, we must remember, is only required to exert a correcting force) in the direct line of flight, without it influencing the machine in either an upward or downward direction while the machine is flying steadily on an even keel. It is true, that to balance the nose heaviness, the airflow, and slipstream from the propeller, is "holding the tail down," but it is obvious that once the tail has assumed an angle of zero incidence, the slipstream can exert no further pressure on it.

Lifting tails are another matter, and will be considered later.

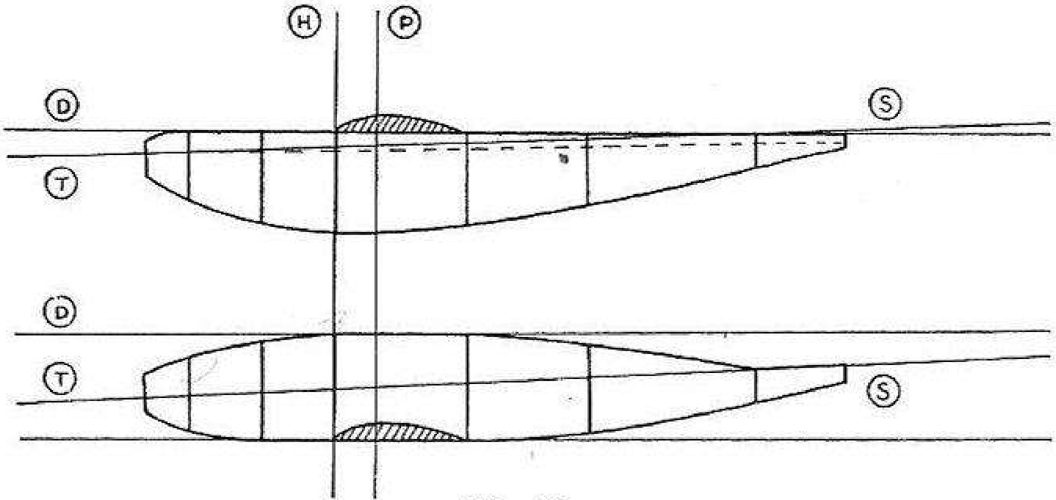

Fig. 56

As we are already aware, the line of thrust should coincide, as nearly as possible, with the line of resistance, and it is here that the greatest difficulty arises. It is impossible for the amateur, with the limited means at his disposal, to do anything other than make a shrewd guess at the position of the line of resistance. A drawing should be prepared of the front elevation of the proposed model, and a point assumed, taking into consideration the amount of projected area presented either above or below the centre of the machine. Neither we nor anyone else can give you more exact information than this. To descend to that engineer's horror, "rule of thumb," it may be helpful to suggest that in a high-wing machine the centre of resistance may lie somewhere in the region of the top longerons, while in the low-wing type a point situated about one-third of the fuselage height above the bottom longerons is the probable area. In biplanes and mid-wings it lies approximately half-way between these two points.

The several types of model aeroplanes, i.e., high-wing, low-wing, etc., have already been introduced to the reader, who is, by now, familiar with their various characteristics. In view of this there seems no reason why we should not proceed to a consideration of the fuselage lay-out necessary for these types.

We will presume that a high-wing monoplane is under consideration, and that we are standing before a clean sheet of paper, our pencil sharpened, and our "T" square or ruler at hand. Our first procedure is to draw a horizontal line across the paper. This is called the "datum line," and we will denote this by marking it "D."

We have, of course, decided upon our wing span, and it may be helpful to suggest that the fuselage length be two-thirds the wing span of a high aspect ratio wing, or, in the case of a wing of low aspect ratio, the fuselage length may be equal to the span. Having decided the fuselage length, and marked this upon the datum line, we will now fix a point one-third the distance along, and mark this "P" (See Fig. 56). It is here that we will place the wing, the centre of pressure of which should lie over the point "P."

It is now necessary to decide the depth of the fuselage, and for this we will consult the fuselage formula laid down by the Society of Model Aeronautical Engineers, which states that the greatest cross sectional area of any fuselage must at least equal $\frac{\text{overall length of model}^2}{100}$ * This formula has been evolved to form a basis of distinction between fuselage models and those approaching the spar type.

---

* Example :—

Length of machine : 20 inches.

$\frac{20}{10} \times \frac{20}{10} = 4$ square inches.

Therefore :—fuselage may be :—
4″ × 1″, or 2″ × 2,″
or any factors the product of which is 4.

It is desirable to make our fuselage deeper than it is wide at the point of greatest area, as on a high-wing model this enables the centre of gravity to be kept low. It is advisable not to make the fuselage height too great in relationship to the width, a ratio of about 2 : 1 being an average figure. High and narrow fuselages offer a considerable rudder effect.

The length of the model having determined the minimum amount of cross sectional area, we can now decide upon a suitable depth and width. The greatest depth having been ascertained, we will set this measurement along a line drawn vertically downwards from the leading edge of the wing, as " H " in Fig. 56. We now have two dimensions, length and breadth, or rather, three dimensions, as we also know the width of the fuselage. However, we shall not require this until later.

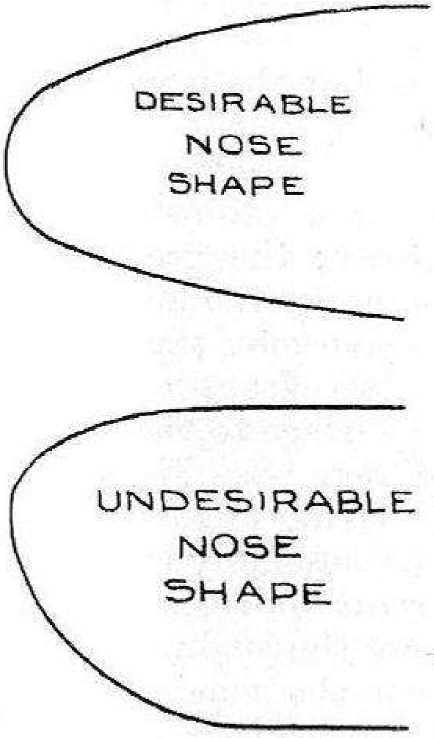

Fig. 57

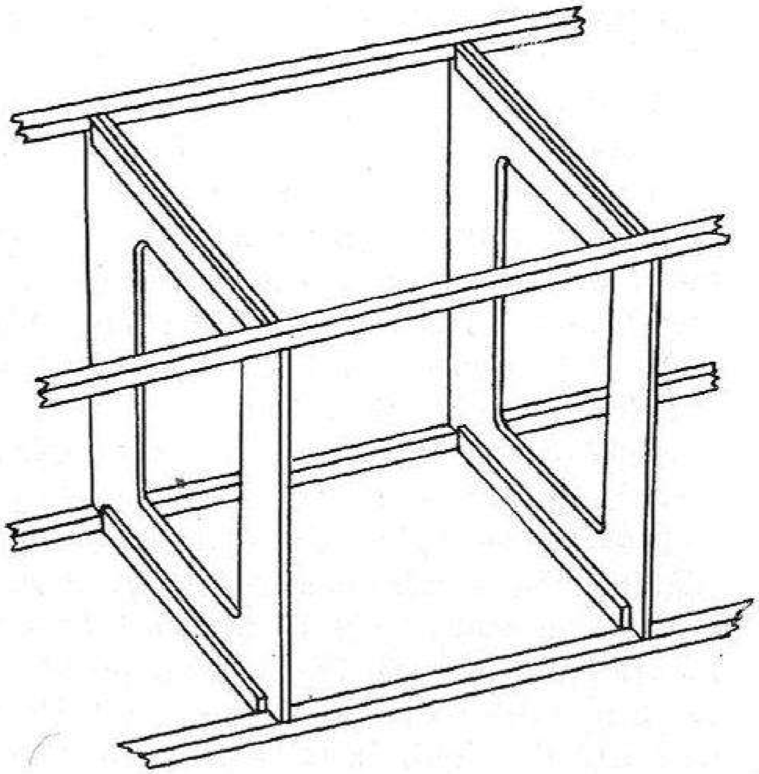

Fig. 58

Our next step is to determine the angle at which the tail plane will be set upon the fuselage. As we are concerned with a high-wing monoplane, the incidence need not be very great, two degrees usually being ample. We shall, therefore, draw a line at this angle at the appropriate position on the datum line. This represents the tail plane, and is marked " S " in the illustration. It will be seen that this tail line commences on the datum line. It is the practice of some designers to bend the top longerons at this point to conform to the angle of incidence of the tail. This is quite good, but seems an unnecessary complication in a simple high-wing monoplane. The easier and more straightforward method is to keep the top longerons straight, and pack the tail, with a small piece of balsa, to the small amount of incidence necessary. This also avoids a prolific source of inaccuracy and goes far to ensure that the tail and main plane sit squarely to each other upon the fuselage.

We know that it is desirable to keep the line of thrust parallel with or in line with the tail, so we will now indicate this by a continuation of the tail line, and mark this "T." This actually forms the line of the propeller shaft, but it is obvious that the rubber motor cannot function in this position, so the rubber line must be dropped at the rear end as shown by the dotted line in the illustration.

It now remains to draw in the outline of the fuselage, and this may assume any reasonable shape. It is desirable to keep the nose of a blunt, rounded outline; the greatest depth of the fuselage should preferably lie under the leading edge of the wing, and the rear of the fuselage may taper to a knife edge or to a point. Do not let the front undersurface of the fuselage present a wall-like surface to the airstream as this tends to aid a model in stalling. See Fig. 57.

Finally we may fix the positions of the struts or formers, placing these where strength and ease of assembly render them necessary. It is as well that a strut or former be located under each of the two points where the leading and trailing edges of the wings will lie when the machine is assembled. This is to withstand the pressure of the wing-fixing rubber bands.

No matter what shape may be desired for a fuselage, whether it be of round, oval or composite section, the above method of setting out may be used satisfactorily.

As the centre of resistance will be situated lower down in a low-wing aeroplane, a slightly different "line-up" is called for to enable the line of thrust to exactly oppose the line of resistance. It is still desirable that the tail shall form a continuation of the line of thrust or lie parallel with it, and for this reason a lowering of the tail position is expedient, as shown in the lower drawing in Fig. 57.

We shall proceed to work from the datum line as in the high-wing case, but our first step is to draw a line parallel with this at a distance corresponding to the depth of the fuselage. On this line we will locate the wing. We know that, in this instance, it is advisable to give the tail plane a greater angle of incidence, say, three degrees. We will, therefore, draw the line of the tail plane at this angle in such a position that this line will coincide with the desired line of thrust. In a simple, rectangular, four longeron fuselage it is necessary to steam the top longerons to the desired tail position, but if a round, oval, or composite section is desired, straight through longerons may again be utilised. In this case they will lie parallel with the line of thrust, and be located at the sides of the nose former, the top decking and other additional features being added afterwards by means of stringers.

The formers or struts may now be indicated, bearing in mind the requirements of strength. It is, of course, necessary that the bottom longerons be steamed to a shape which will allow the wing to locate parallel with the datum line. This usually means that a flat portion must be allowed in the bottom longerons at this point.

Enough has been said to indicate suitable methods of laying-out simple types of fuselages. Although only actually dealing with the high and low-wing types, both the mid-wing and the biplane may be approached in this manner. In all types the nose former may be set at an angle of ninety degrees to the line of thrust. When using the lifting type of tail, the above procedure may again be adopted; that is, the tail plane may again be situated parallel with the thrust line. In trimming the machine, however, it is usual to place the centre of gravity directly below the centre of pressure of the wing, or even behind it, instead of forward, as is the case with the negative tail.

Parasols and gull-wings may call for different treatment, as a lifting tail must usually be utilised. This may be placed on the top longerons or in a position just below these, the angle at which the tail is set being chiefly governed by the distance of the centre of resistance above the line of thrust. Other things being equal, it may be considered that the greater this distance, the more lift is required from the tail, which may even be set at a positive angle to ensure this. The line of thrust may be parallel with the datum line, and both the tail plane and the main plane may be set at a positive angle to this. Slight downthrust may be used. The amount of lift actually required from the tail is a difficult matter to calculate, and the reader will begin to perceive the force of our remarks on lifting tails in Chapter III.

Construction

It must be remembered that the constructional methods detailed in this book form only a tithe of the possible systems. They are a few of the most popular, and all have stood the test of time.

Generally speaking, two methods hold the field to-day. In one of these, the fuselage is built upon formers cut from sheet balsa or thin plywood, and is known as the "ply-former system." This is shown in Fig. 58, and it will be noted that the formers are reinforced across the grain with small strips of wood. This method is useful when round, oval or multi-sided fuselages are being constructed, the formers being cut to the shape of the particular section of the fuselage at which they will be situated. In this way quite complicated fuselages may be formed, as, for instance those which taper from round at the front to oval or rectangular at the tail end. The formers are held together by longerons or stringers placed at the positions which the design will dictate.

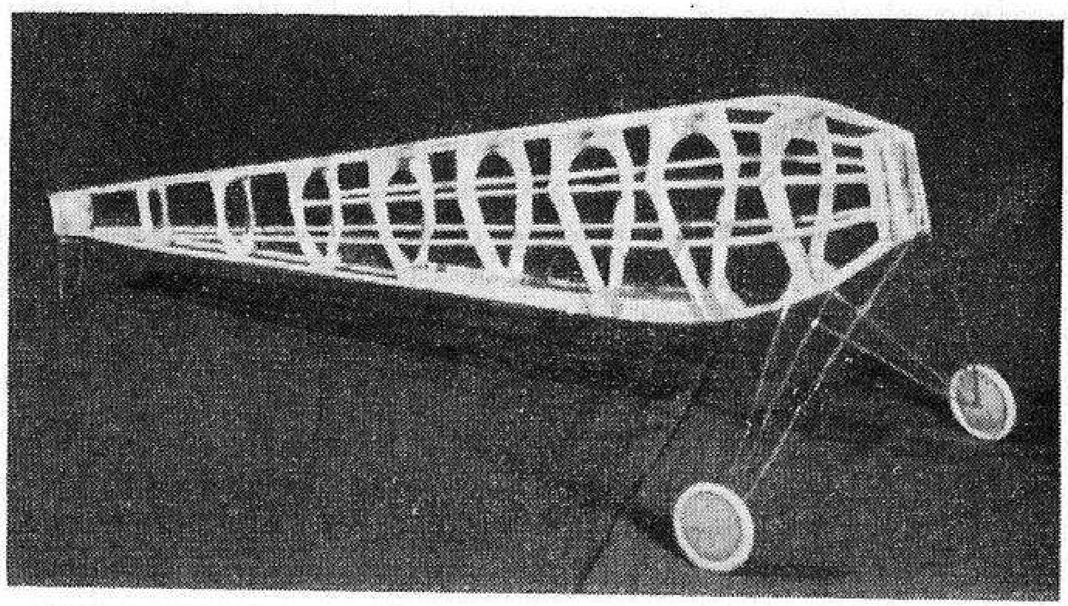

Fig. 59.—An all-balsa multi-sided fuselage, built on sheet balsa formers

The usual method of assembly is as follows : The plan of the fuselage is marked out upon a sheet of paper which is fixed firmly to a flat board by means of drawing pins, and the nose and tail formers are secured in their correct positions upon this. The position of all the formers is also indicated.

The longerons, which have been steamed to the appropriate curves, are then glued or cemented to the nose and tail formers, and when set, the *largest* former is inserted. The fuselage will now assume the approximate shape desired, the insertion of the remaining formers completing this. Before allowing the job to set it should be checked for alignment. Particular care should be taken to ensure that the fuselage sides are truly vertical, and this should be checked from the board with a small set square. A suitable set square may be cut from a piece of 1/16th inch three-ply or cut from a plain postcard.

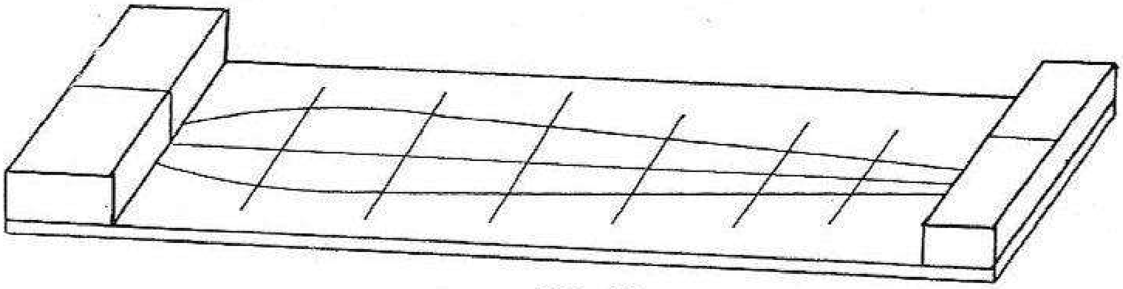
Fig. 60

When the glue or cement is dry, the structure may be removed from the board, and any struts or other reinforcements put in. Take care not to distort the fuselage in doing this. Bracing struts should be a good fit, but do not cut them too long and force them into position, as this will push the structure out of square. The building of fuselages by this method is much facilitated by the use of straight-through longerons as already described. When these are employed it is possible to fix the longerons to the plan and build the

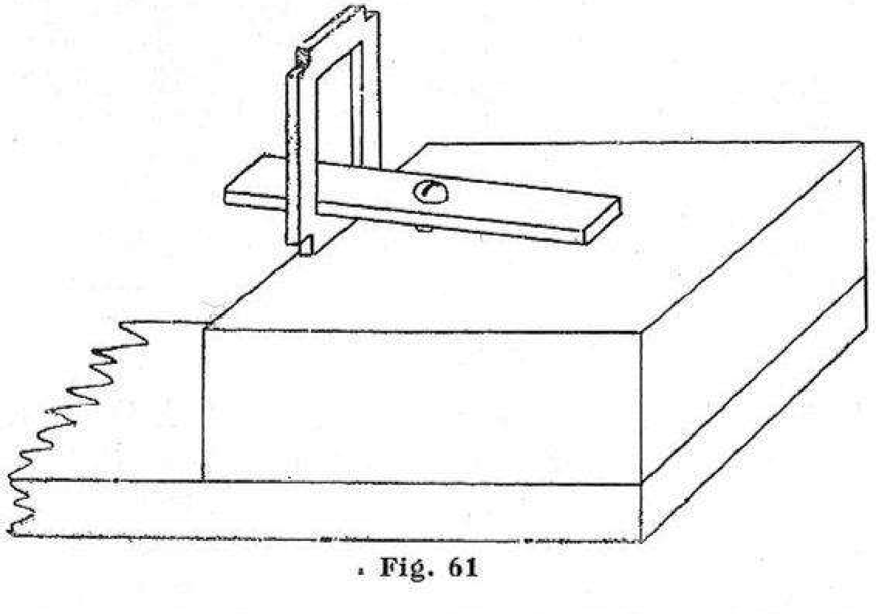
. Fig. 61

fuselage "upside down." In this manner only the nose former need be packed to the required height.

Fig. 60 shows a suitable jig for building ply-former fuselages. The blocks for raising the nose and tail formers to the correct height are shown, also the plan of the fuselage set-out. A practical way of rigidly securing the nose and tail formers is indicated in Fig. 61.

A system much employed in America is illustrated in Fig. 62. In this method the formers are cut into halves, and each half fuselage is assembled separately. It will be noticed that the two stringers marked "A" lie upon the board. These stringers are used in each half, and are cemented together along their whole lengths when the two half fuselages are assembled together. This method is fairly simple, and ensures a good degree of accuracy. It is particularly applicable to round or oval fuselages which are usually difficult to build truly by other means.

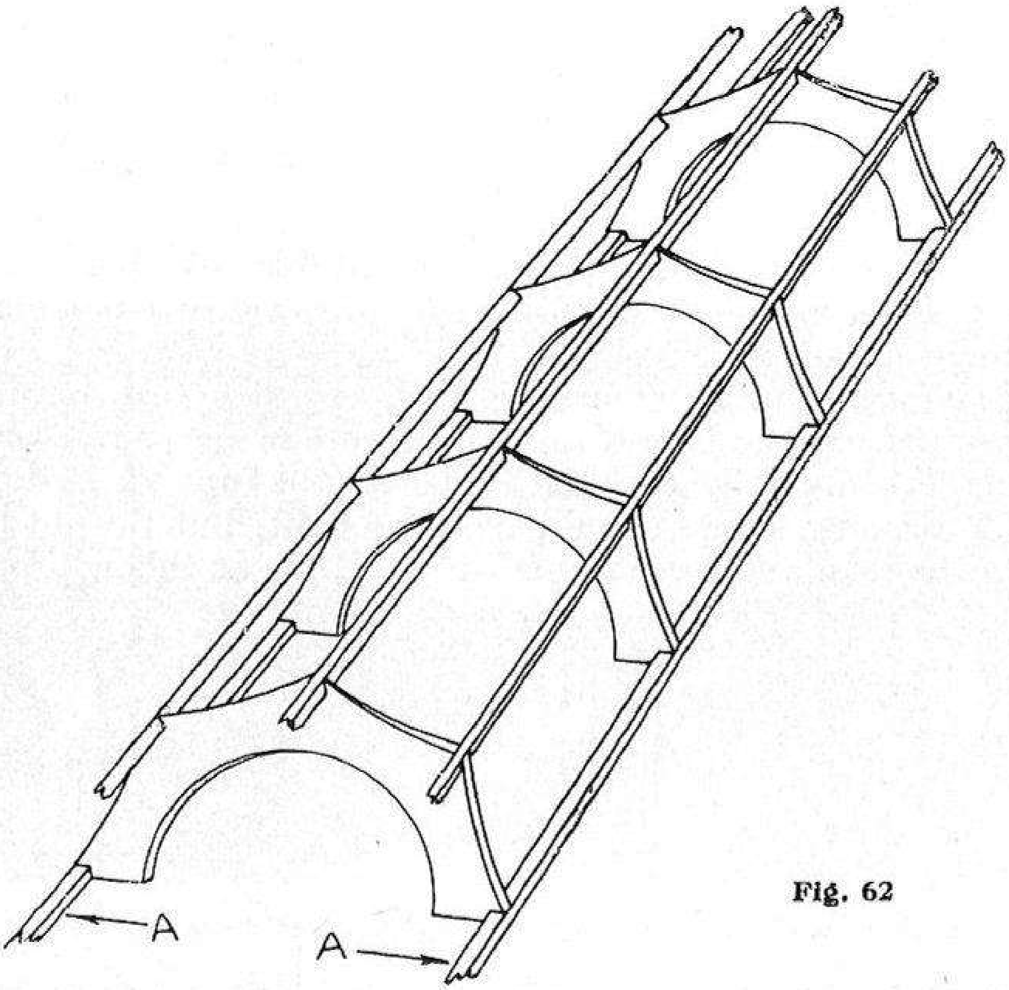

Fig. 62

Although the drawing in Fig. 62 represents a construction for a "round" fuselage, it will be seen that the outer edges of the formers are cut slightly concave between the longerons. This is done to enable the doped covering to follow closely the shape of the fuselage. If perfectly round formers are used the covering will "pocket" between each former, and a bad appearance will result. Furthermore, this series of pockets, when presented to the airstream in flight, sets up eddy currents which are very detrimental to performance. Strictly speaking, the fuselage represented in Fig. 62 is of an octagonal section, but the round can be approached very closely by the use of many longerons or stringers. Perfectly round fuselages may be obtained only by encasing the framework in thin sheet balsa.

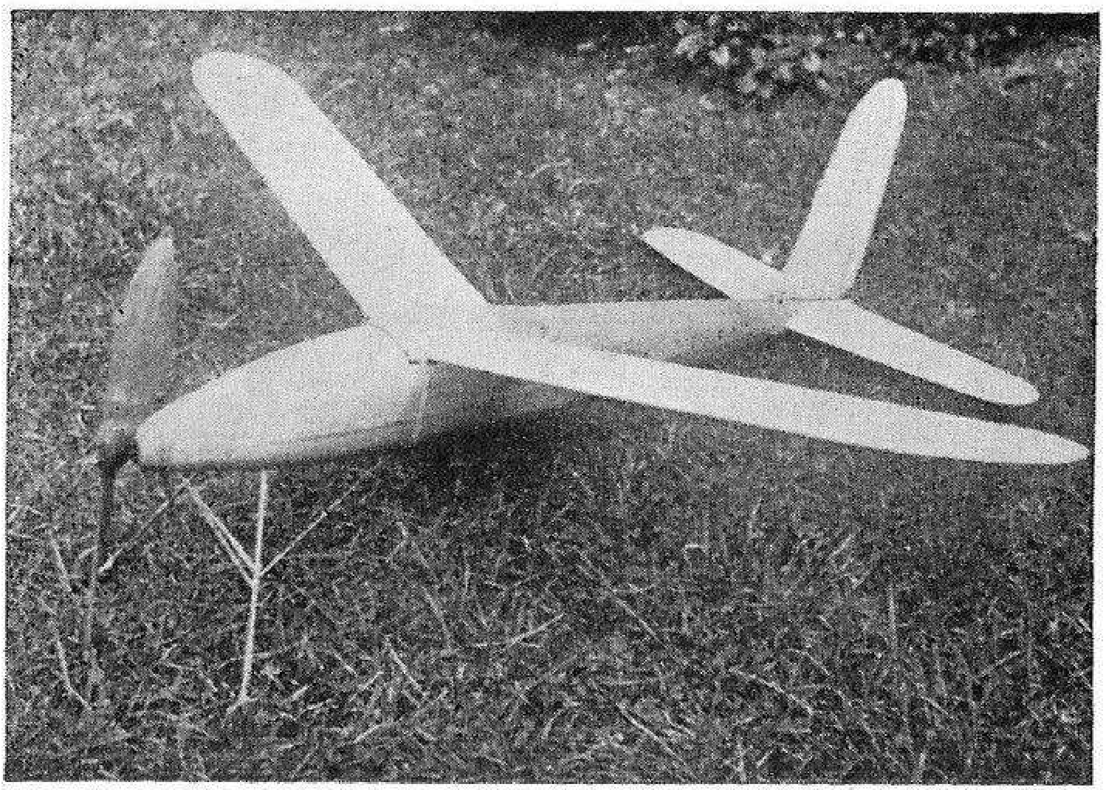

Fig. 63.—Shoulder-wing monoplane built with former and stringer construction, showing how closely the round section may be approached with this method

Rectangular fuselages may very easily be assembled on the "strut former" basis, in which the formers are built up of square or rectangular section strips of wood. In this method of construction, a side elevation of the fuselage is set out upon a board, and one fuselage side assembled on this. Without removing from the board, the second side is built flat on the top of the first, thus ensuring that each side conforms in all particulars. When removed, the builder has two perfectly flat fuselage sides which are then placed

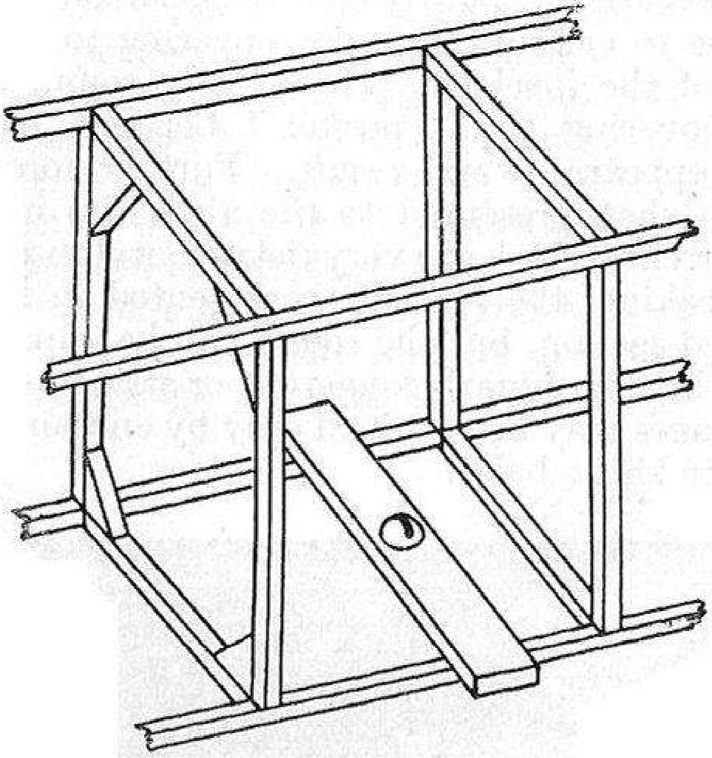

Fig. 64

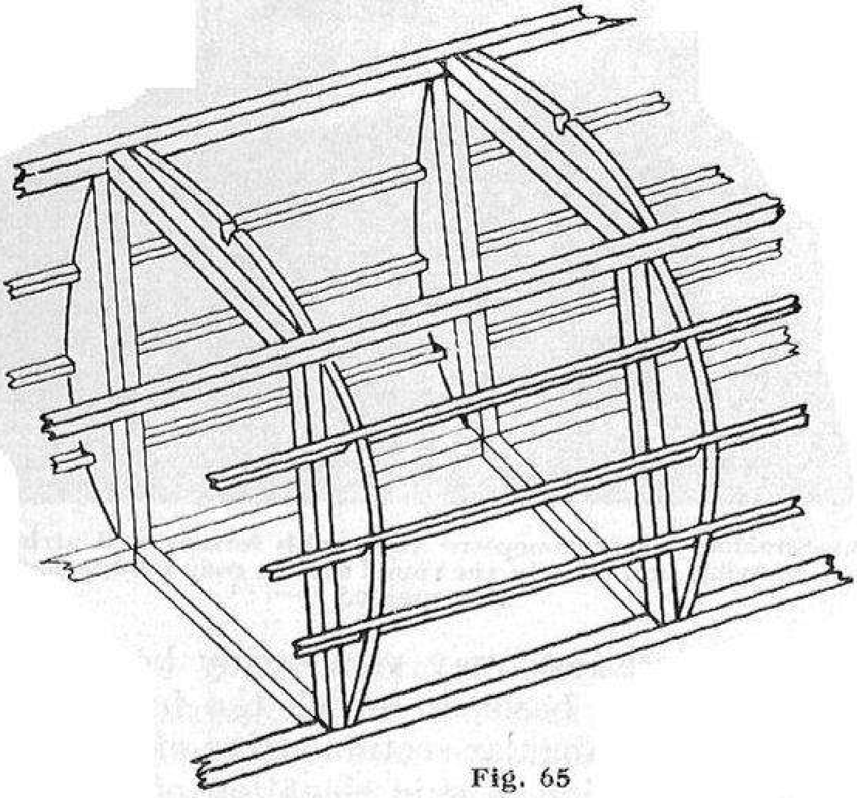

Fig. 65

in an upright position on a plan drawing and held by pieces of wood screwed to the baseboard as shown in Fig. 64.

The cross struts are then glued in, and small corner blocks affixed at intervals to maintain rigidity. It is a good plan to cut all the struts in pairs so that they may be of equal lengths. Cross-bracing is added afterwards as in the ply-former method.

This second method forms a lighter construction than the first and is ideal for simple balsa fuselages. Of course, a combination of the two may be employed. Thus the two sides may be built up and joined together by balsa or ply-formers, or oval or circular fuselages may be obtained by the strut-former construction in the manner indicated in Fig. 65. A plain rectangular fuselage is first built, and small pieces of balsa, shaped as required, are cemented to the struts. Light stringers are now affixed to maintain the shape throughout.

The possibilities of " L " section balsa for longerons should not be overlooked. The use of this will result in a very strong job, the " L " section lending itself particularly well to the accommodation of ply-formers or struts. Its greatest limitation is, of course, that it will not permit of very short or acute curves. A fuselage composed of " L " section balsa longerons and " T " section balsa vertical and cross struts is a very sound proposition.

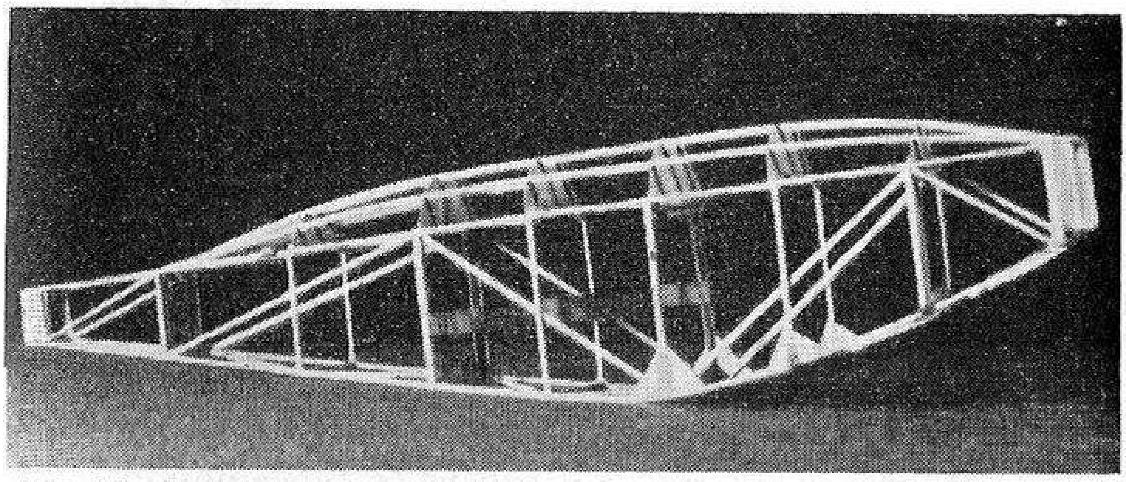

Fig. 66.—Showing a strut-former fuselage with a top decking added upon balsa formers. Note the efficient cross-bracing

An extremely simple formation is afforded by the method shown in Fig. 67. Here, the complete fuselage sides are cut from a sheet of 1/32nd inch or 1/16th inch balsa. Strengthening pieces are glued along the edges, and lightening holes cut at suitable points if desired. These sides may then be fixed together by cross-struts or ply-formers. Fuselages assembled by this method are extremely strong, and all necessity for cross-bracing, except on the top and bottom, is eliminated. It is not, perhaps, suitable for ply-wood construction on account of the weight involved. By forming the sides of $\frac{1}{8}$ inch balsa sheet, and sand-papering down from the centre to the edges, a convex shape may be given to the sides (Fig. 68).

A system of former construction which bids fair to supersede all others is the "wound-former" system of construction which was evolved by Mr. C. A. Rippon. In this method, the formers are made by winding and cementing strips of balsa around a detachable, cardboard former, which is cut to the desired shape of the fuselage section. As the matter is amplified in the Chapter on "G.B.3" it will not be detailed here.

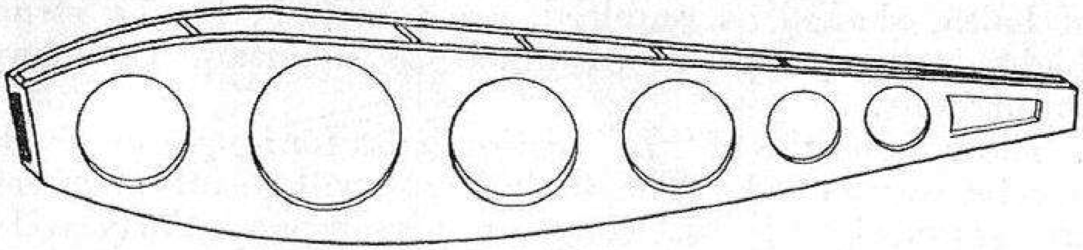

Fig. 67

Those builders who require a certain degree of realism in their models may incorporate a cabin in the fuselage with good effect. In any case, the cabin structure should be kept as light as possible, and may either be incorporated in the design or superimposed upon a conventional fuselage. The second method probably lends itself more readily to easy construction, as a true and rigid fuselage may first be built and an extremely light cabin structure added afterwards.

The use of light stringers for top deckings is to be recommended, but it is often advantageous to carve nose-deckings from the solid balsa. This construction (Fig. 70) not only gives a clean finish, but adds greatly to the strength of the nose, and has the additional advantage of placing weight in the correct position. On any but the lightest of fuselages the nose should be reinforced in some manner, preferably with balsa blocks or even balsa panelling as shown in the photographic illustration in Fig. 71. The actual nose-former may, with advantage, be made of three-ply of $\frac{1}{8}$ inch or 3/16th inch thickness.

Fig. 68

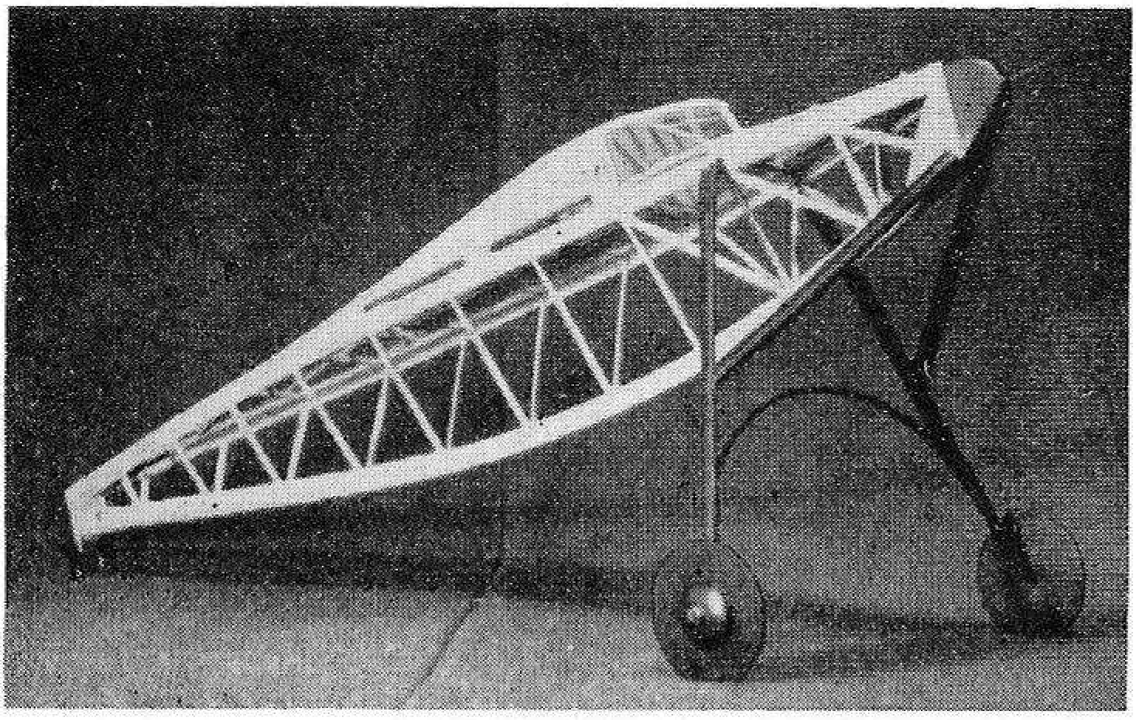

Fig. 69.—A triangular section fuselage with cabin incorporated. The slots at the base of the cabin are to accommodate the wing-fixing tongues

Special attention should be given to the points of attachment of the undercarriage, which should be reinforced with a view to distributing the landing shocks over as much of the fuselage as possible. If the stresses are too localised a broken longeron usually results. It is most important to attach the undercarriage at points where the fuselage formers meet the bottom longerons, and to take bracing struts from these points as in Fig. 72. In undercarriages having four fixing points, the two front legs may often be attached to the nose former quite satisfactorily.

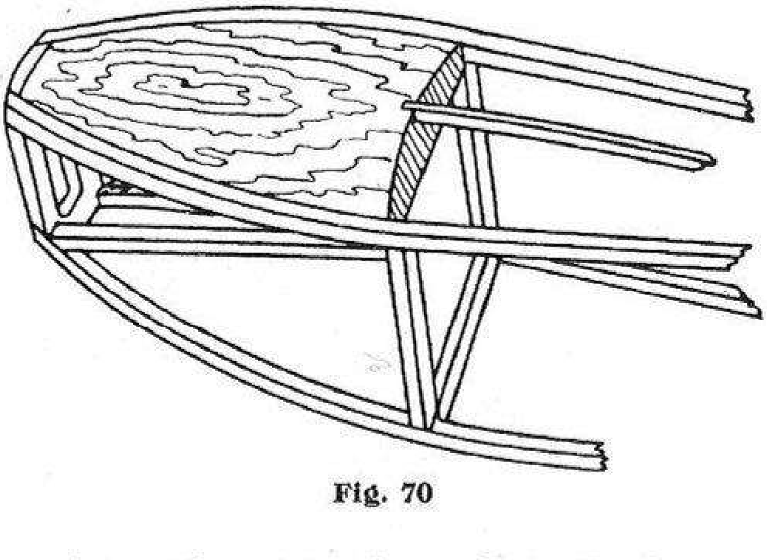

Fig. 70

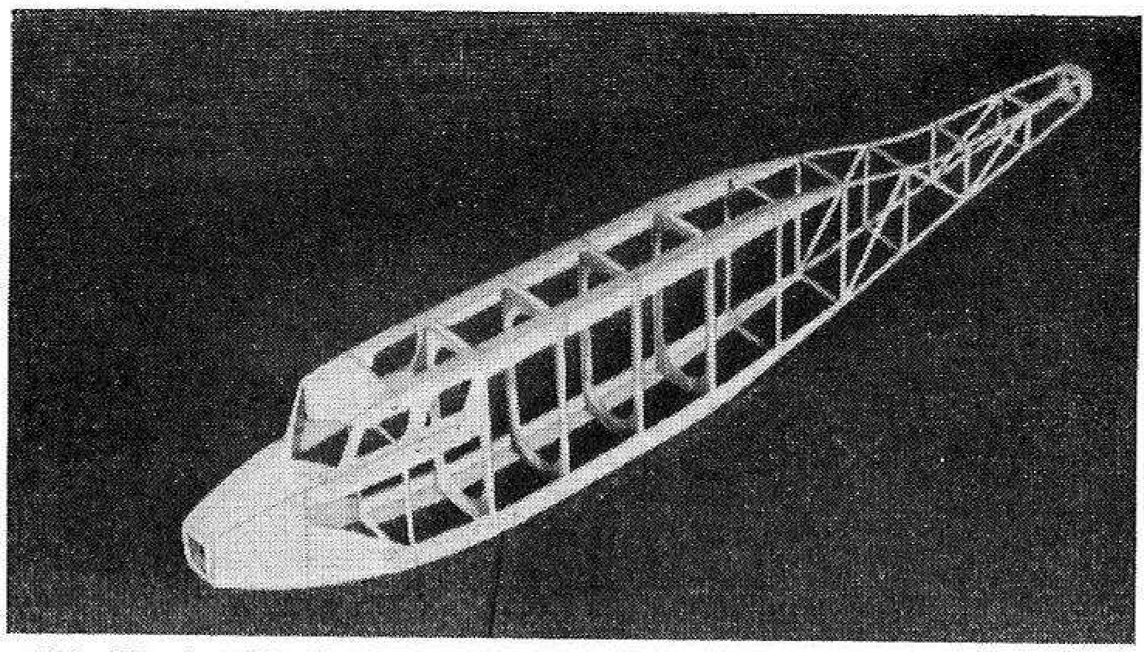

Fig. 71.—A cabin fuselage embodying both ply-former and strut-former construction. Note balsa sheet reinforcement at nose, and balsa strips cemented to longerons

A piece of fine brass tubing carried across the bottom of the fuselage, and bound to each longeron, comprises a sound undercarriage fixing (Fig. 72). Small metal clips, bound to the longerons as shown in Fig. 73, are sometimes used in the lighter models, but are apt to come adrift on the heavier types.

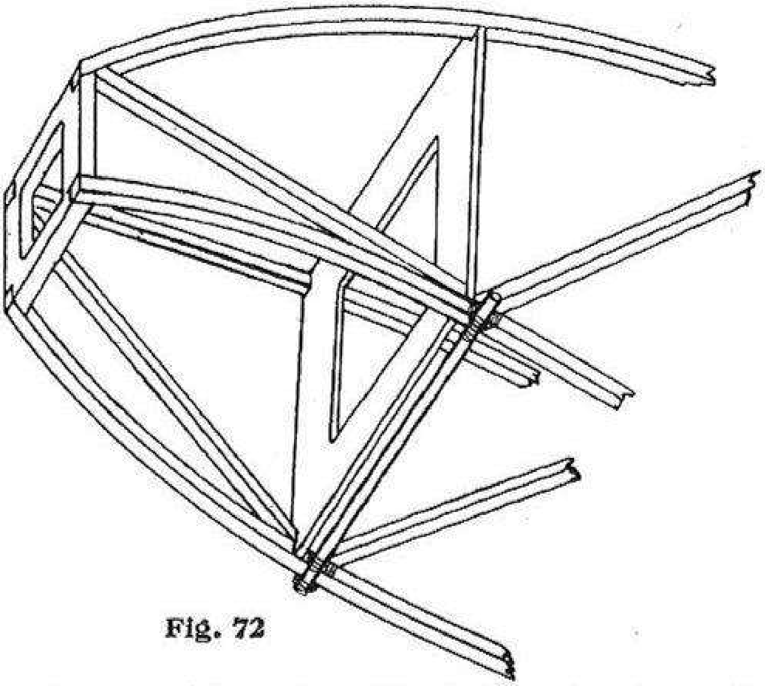

Fig. 72

The importance of keeping the tail end of the fuselage as light as possible cannot be overstressed. Nothing bespeaks bad design more than the necessity for placing the main wing far back on the fuselage in an effort to obtain correct balance. If any advice may be dogmatically given it is that of the necessity for keeping the tail light. For this purpose it may sometimes be advisable to terminate the rubber motor before the extreme end of the fuselage, but this is bad practice on account of the smaller number of turns which a short motor will accommodate. Better to design and build the fuselage correctly in the first place.

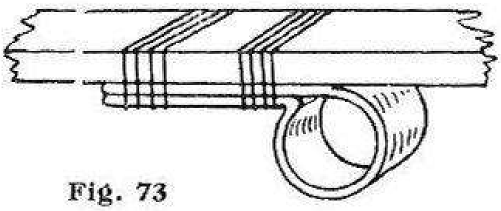
Fig. 73

The hook for the attachment of the rubber motor at the rear end of the fuselage is often constructed of piano wire, and care should be taken in the design to ensure that sufficient room is allowed to permit the rubber to be attached without undue trouble. Rubber motors have the unhappy knack of breaking, and as this usually happens on the flying field, an easy access to the motor is advantageous. A detachable hook will often aid the easy renewal of a rubber motor, and a suggestion is given in Fig. 74. In this illustration only the sternpost of the fuselage has been shown, all longerons being omitted for the sake of clearness. Two small lengths of brass tubing are bound and soldered to the front and rear of the sternpost in the positions shown, and a piece of piano wire, to which the rubber hook is bound and soldered, is bent to locate in the pieces of tubing. The whole is detachable by pulling upwards.

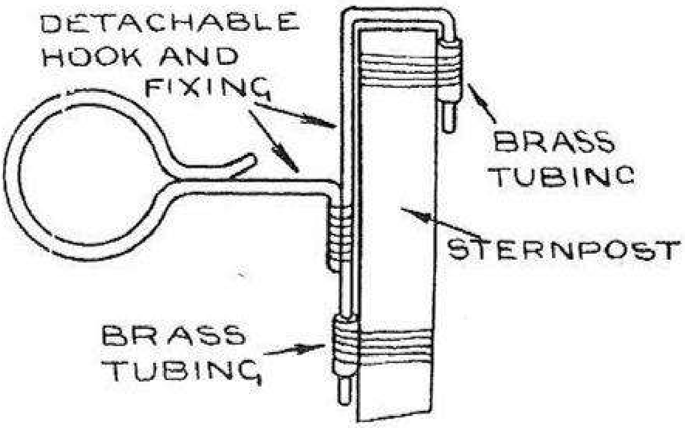

Fig. 74

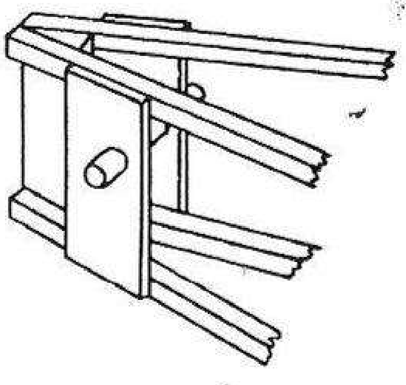
Fig. 75

Another method, utilising a short piece of bamboo, is shown in Fig. 75. This piece of bamboo is passed through the loop of the rubber skein, and located in holes in thin plywood uprights affixed to either side of the fuselage.

For simple light-weight constructions the tail-skid may be integral with the rubber fixing hook, which is bound to the sternpost as in Fig. 76. This illustration also indicates a practical tail-skid for use when the simpler method is not possible.

In ultra-light-weight balsa fuselages the simplest form of construction is called for, and a great deal in the way of reinforcing cannot be undertaken if the weight is to be kept as low as possible. One is usually prepared to take chances with these light types which are not, in the nature of things, subject to such great flying and landing stresses as their heavier counterparts. Most of the damage is done in the actual handling of these machines, and a little judicious strengthening will often prevent annoying breakages. It should not be overlooked that the rubber bands usually employed for wing and tail fixing, exert a considerable pressure on these light structures, which may be strengthened, without much addition of weight, by means of small strips of balsa glued *on edge* along the longerons at the susceptible points (see Fig. 77). Similarly, a former or strut should always lie at the spot where the tail-fixing rubber bands will be located.

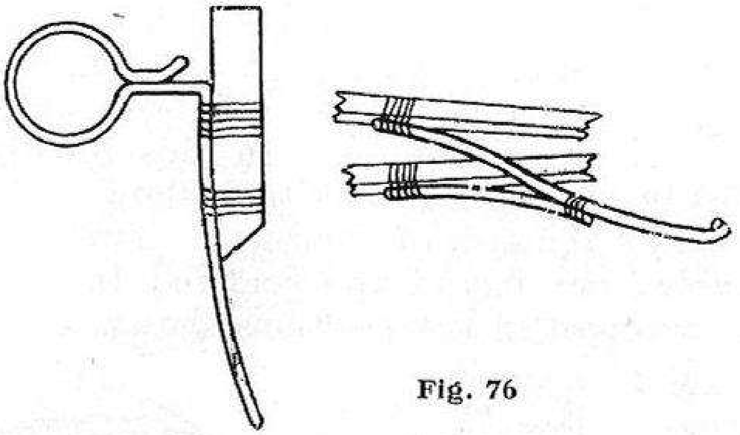

Fig. 76

On average ultra-light-weight and light-weight machines no cross-bracing against the torsion or twist of the rubber motor need be incorporated in the fuselage. The doped covering is usually sufficient for this purpose, but should not be relied upon if the machine is to be used on wet or damp days. If much moisture is present in the air, the doped covering will slack-off considerably, and leave the fuselage practically unbraced. In any event, not a great deal of bracing should be necessary unless a very powerful, single skein motor is used, and a cross-strut here and there will usually serve the purpose. When any even number of rubber skeins is coupled together by means of gears no precaution against torsion need be taken.

In America, a much favoured method is to use a "motor stick." This usually takes the form of a balsa box spar, one end of which is rigidly attached to the nose-block. The other end of this spar carries the rear rubber hook, the whole forming a separate motor unit which is plugged into the fuselage, the free end of the spar being located in a fixing at the tail of the fuselage, but free to rotate in this. The advantages of this are that there is no torsional stress on the fuselage, and that the motor is readily accessible. Although only a very light fuselage is necessary, any saving in weight in this direction is probably nullified by the weight of the motor stick, especially as landing shocks must still be guarded against.

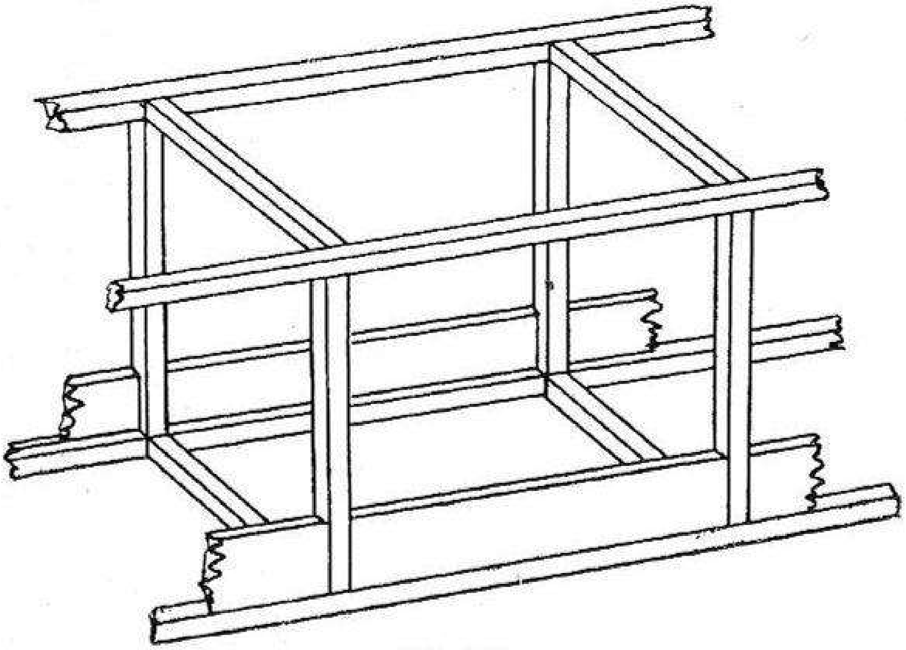

Fig. 77

Nose blocks are usually carved from one of the "hard woods," balsa sometimes being employed for the very light machines. On anything but the very lightest, however, balsa nose blocks may not prove satisfactory, the tension of the rubber motor being sufficient, in some cases, to pull the propeller shaft bush into the soft wood. This is often aggravated by any unlucky nose dives, and the bush is always apt to work loose in the housing. This, of course, destroys the correct thrust-line, and should always be borne in mind. It is common practice to utilise the piece of plywood, removed in fretting out the nose-former, as a locating piece, which is glued and pinned to the nose proper. A hardwood nose-block also adds weight to the front of a machine in a useful way.

In predetermining the centre of gravity in any fuselage, the weight and position of the undercarriage must, of course, be considered. Very light machines often have a tendency to "wallow," and this may often be cured by placing the undercarriage well forward and by using comparatively heavy wheels.

A minor point, often neglected, is the desirability of avoiding any sharp or rough edges *inside* the fuselage, which may cut or chafe the rubber motor. Always smooth off the inner edges of balsa or plywood formers with glasspaper.

In conclusion, it may be remarked that it is advisable not to design a fuselage which makes it necessary to place the tail below the line of thrust. Good machines of this type have been built by experienced builders, but it is a line-up that so often proves unsuccessful that the beginner is advised to leave it alone.

CHAPTER VI

TAIL UNITS

This term applies to the tail-plane and rudder, which, in model aeroplanes, usually form one assembly. The functions of the tail unit have been described elsewhere, and there only remains the question of actual construction.

As the rear end of a model aeroplane must be kept as light as possible, it goes without saying that the tail unit must be designed with this in mind, and a simple form of construction is, on that account, usually called for. A simple framework of bamboo or reed cane, strutted across with a few balsa ribs, will suffice for the majority of light machines. These tail frames are covered on both surfaces with paper tissue and lightly doped. Bamboo and reed cane must be bent to shape by the application of dry heat. If possible, this should be done over a gas flame, but care is needed not to char the wood. It will usually be impossible to avoid a slight discoloration, but this will not matter provided the wood is not burnt. Steaming is not effective, but is quite suitable for thin birch or spruce. These woods may also be curved by soaking for several hours in water,

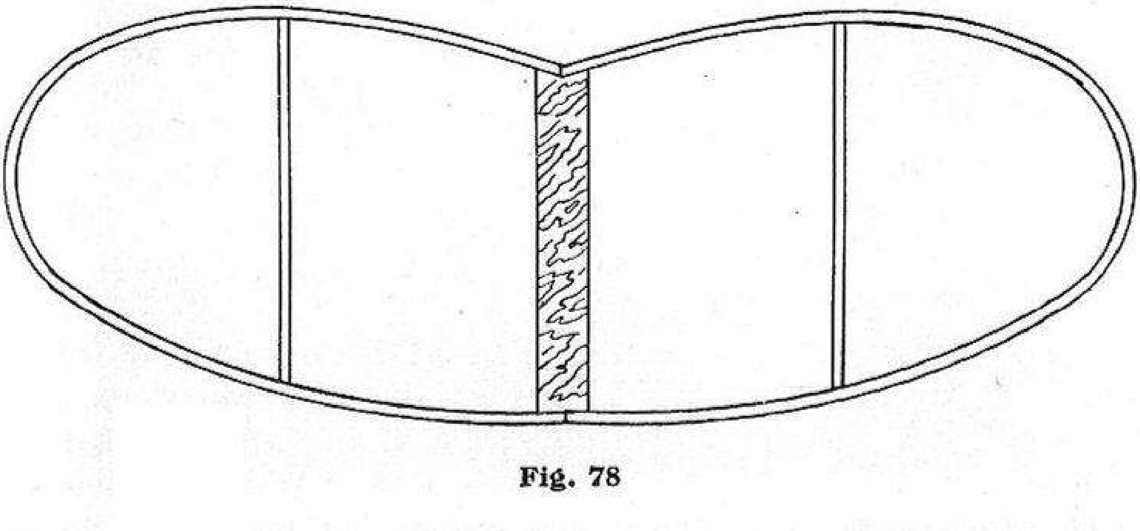

Fig. 78

securing to the desired shape, and allowing to dry in this position.

A tail suitable for bamboo, cane, birch or spruce construction is shown in Fig. 78. In the more complicated shapes (Fig. 80) it is often advisable to make each half of the tail separately. The strips of wood from which they are to be constructed should be bound together with florists' wire, and both bent to shape in one operation. This ensures that both halves are alike.

Tails of similar outline may be made of piano-wire (Fig. 79) but are now not greatly used except for heavyweight general-purpose models. Piano-wire is rather difficult to work in long lengths, and wire frameworks for tails of over fourteen inches in length are sometimes easier to make in halves. Steel wire up to 18 S.W.G. in thickness may be straightened by means of the tool shown in Fig. 81. This consists of a length of board, down the centre of which three nails are driven in line. A length of the wire to be straightened is uncoiled, and threaded between the nails. When sufficient of this protrudes to be firmly grasped with pliers, the wire is given a sharp pull, and will be straightened.

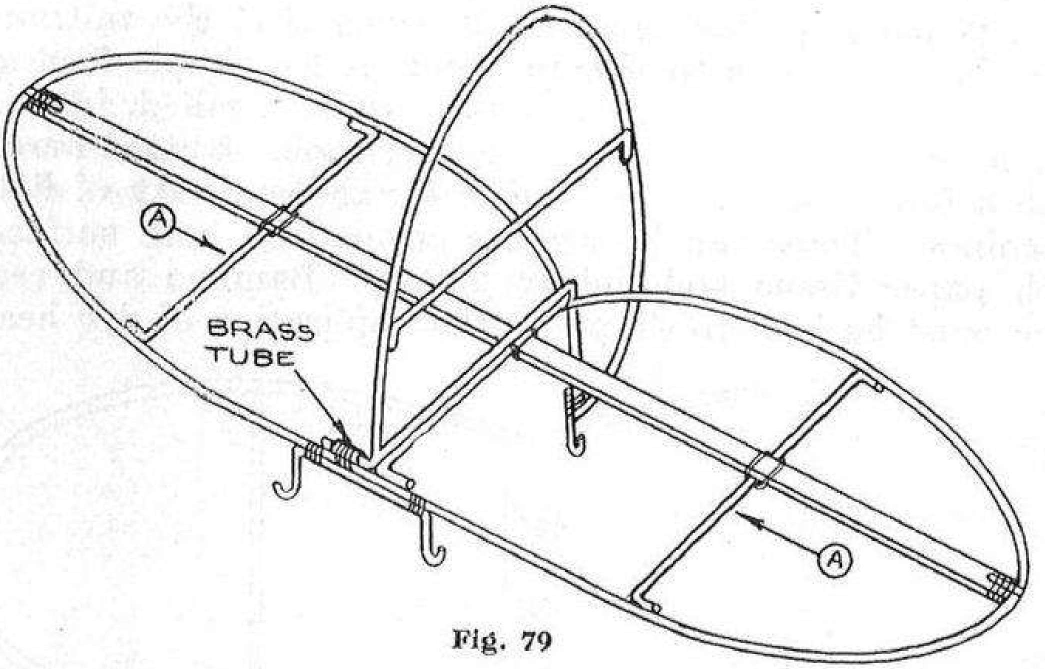

Fig. 79

When making wire tail frames it is essential that the structure be flat, containing no warps or twists. All joints should be bound with florists' wire, and, before finally soldering, it should be ascertained that the framework will lie flat upon a board, touching this at all points. If cross-bracing struts are used be quite sure that these are flat, and that the two ends are bent in exactly the same plane. If this is not done, the tail will be badly warped. This illustration also shows a method of bracing a wire tail of large span by means of a balsa or spruce spar. This is secured at the ends by means of small metal clips, as shown, and bound to the cross-bracing wires.

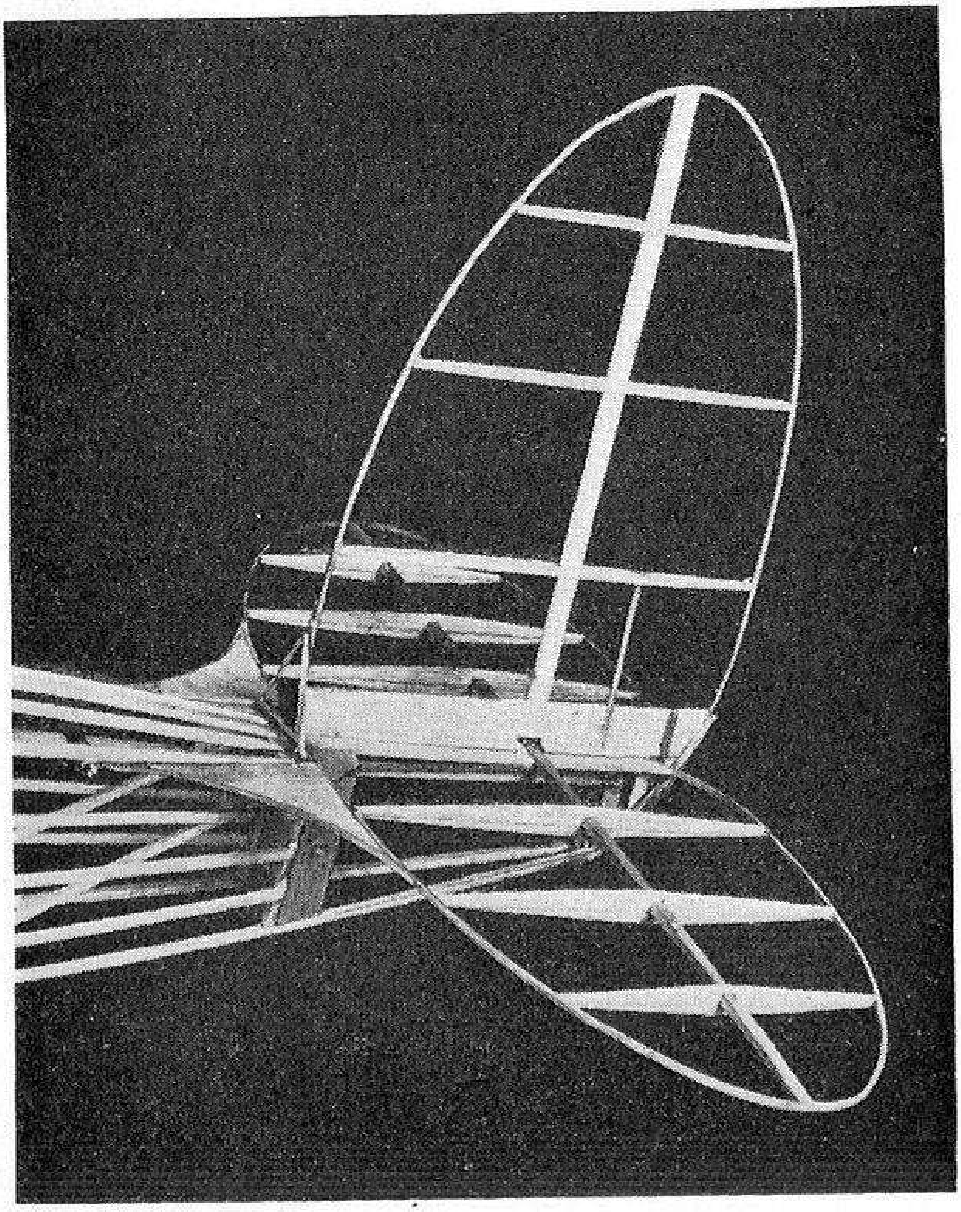

Fig. 80.—Tail unit, with centre spar inset into ribs. Tail is fixed at front by means of rubber band passed through a tube and anchoring to hooks on the tail-strakes

Tails and rudders of more complicated shapes may be constructed by the "built-up" method illustrated in Fig. 82. Any acute curves, such as occur at the tips, may be cut from sheet balsa, and balsa or spruce edges cemented in. It is possible to design quite effective shapes by using straight spars and confining all curves to the balsa inserts. The design should be marked out upon a board and the tail built flat upon this. " Built-up " tails are extremely suitable for all-balsa construction, and are surprisingly strong, especially if stiffening spars are added from tip to tip as illustrated.

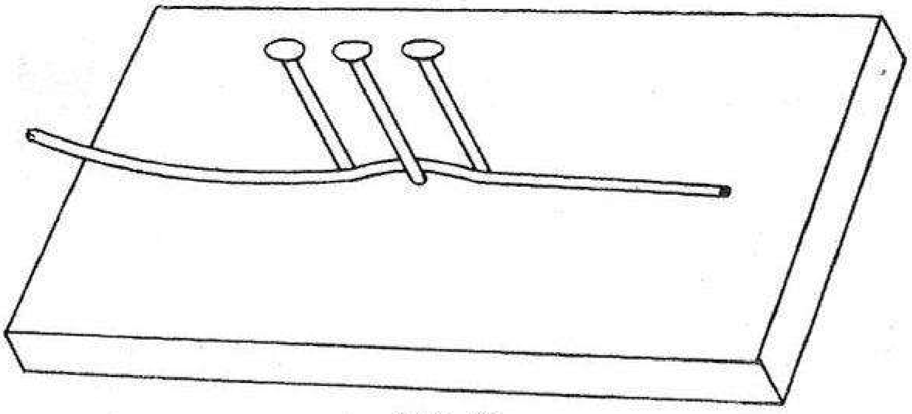

Fig. 81

Note that these spars should be placed on both sides of a negative tail, as if used on one side only, the resultant hump which the spar causes in the doped covering may transform the tail into the " lifting " variety.

The methods just described are suitable for lifting tails, which may be assembled in exactly the same manner, except, of course, that ribs of " lifting " section are used

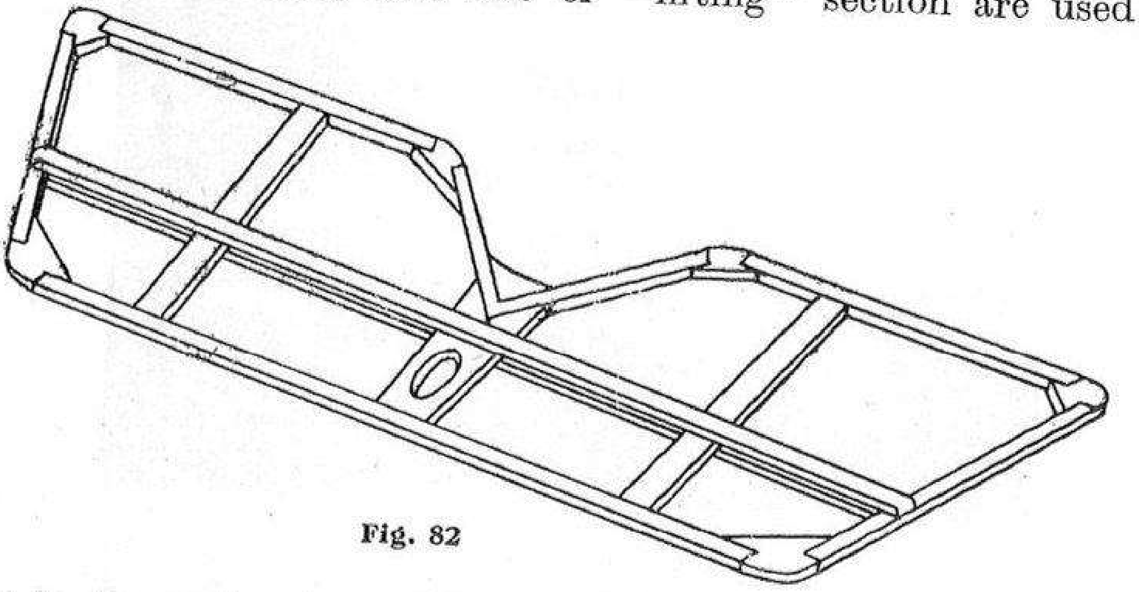

Fig. 82

as in the main wing. Usually the aerofoil section need not be of such high lift as that employed in the main wing. Lifting tails are really small wings, and, therefore, any system applicable to main wings may be utilised. A modification of these methods is, however, advisable, as,

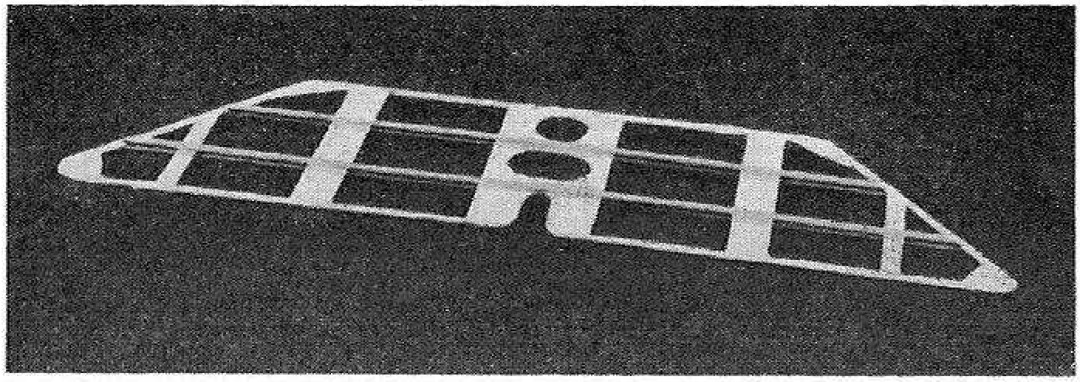

Fig. 83.—Built-up tail plane of all balsa construction, incorporating two main spars

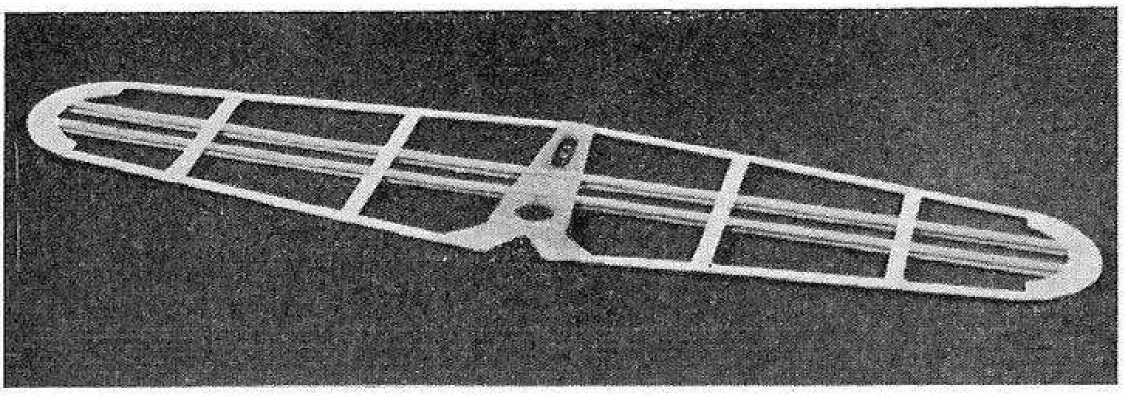

Fig. 84.—All-balsa, built-up tail plane. Note semi-circular tips of sheet balsa and twin main spars

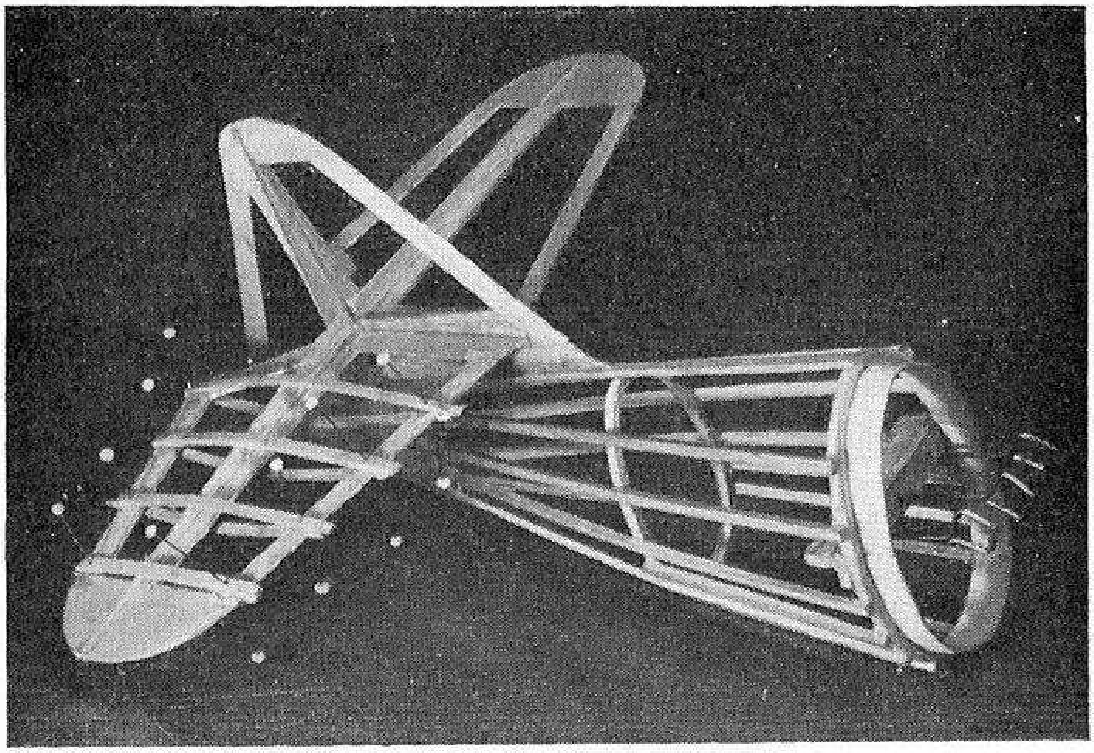

Fig. 85.—Tail unit forming part of detachable end of fuselage. Note method of making the ribs

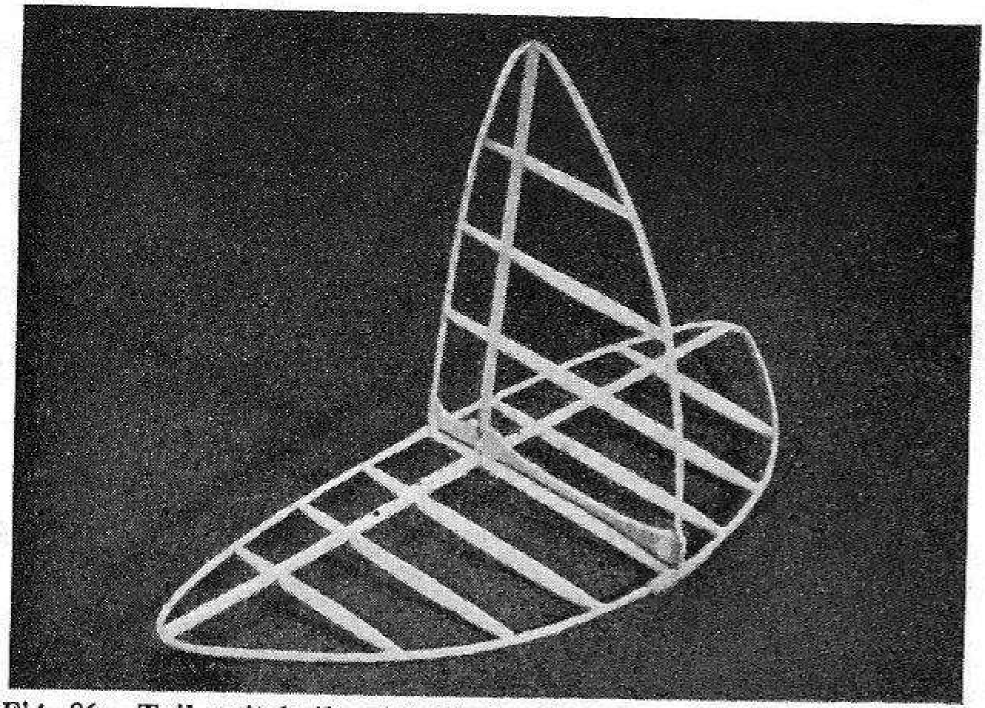

Fig. 86.—Tail unit built with birch edges, and balsa spars passing through balsa ribs

owing to the shorter span, the stresses are much less, and it is extremely important to keep the tail light.

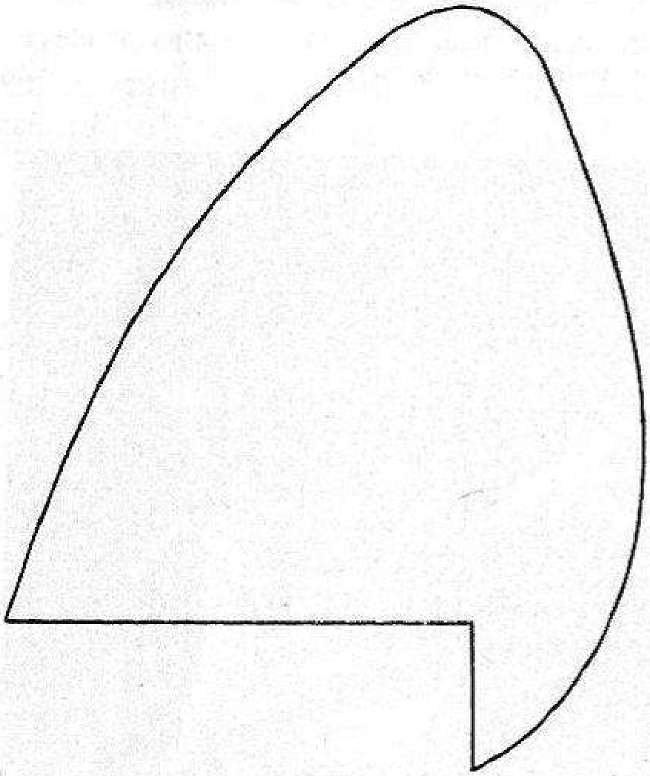

Fig. 87

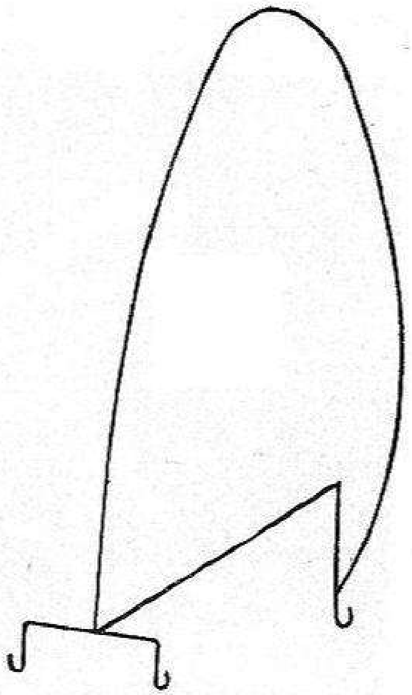

Fig. 88

Rudder fins will, of course, be constructed to be in keeping with the tails with which they will be employed, and no detailed description should be necessary. However, a very finished appearance may be given to the rear of the machine by shaping the lower part of the rudder to carry on the lines of the fuselage (Fig. 87). This also provides a very convenient point at which to fix a small hook; a rubber band being attached between this and the tail-skid. By this system, not only is the one end of the rudder secured, but the tail itself is also held down. A simple form of fixing the rudder at the front is shown in Fig. 88, by means of a wire saddle which is secured to the fuselage by a rubber band.

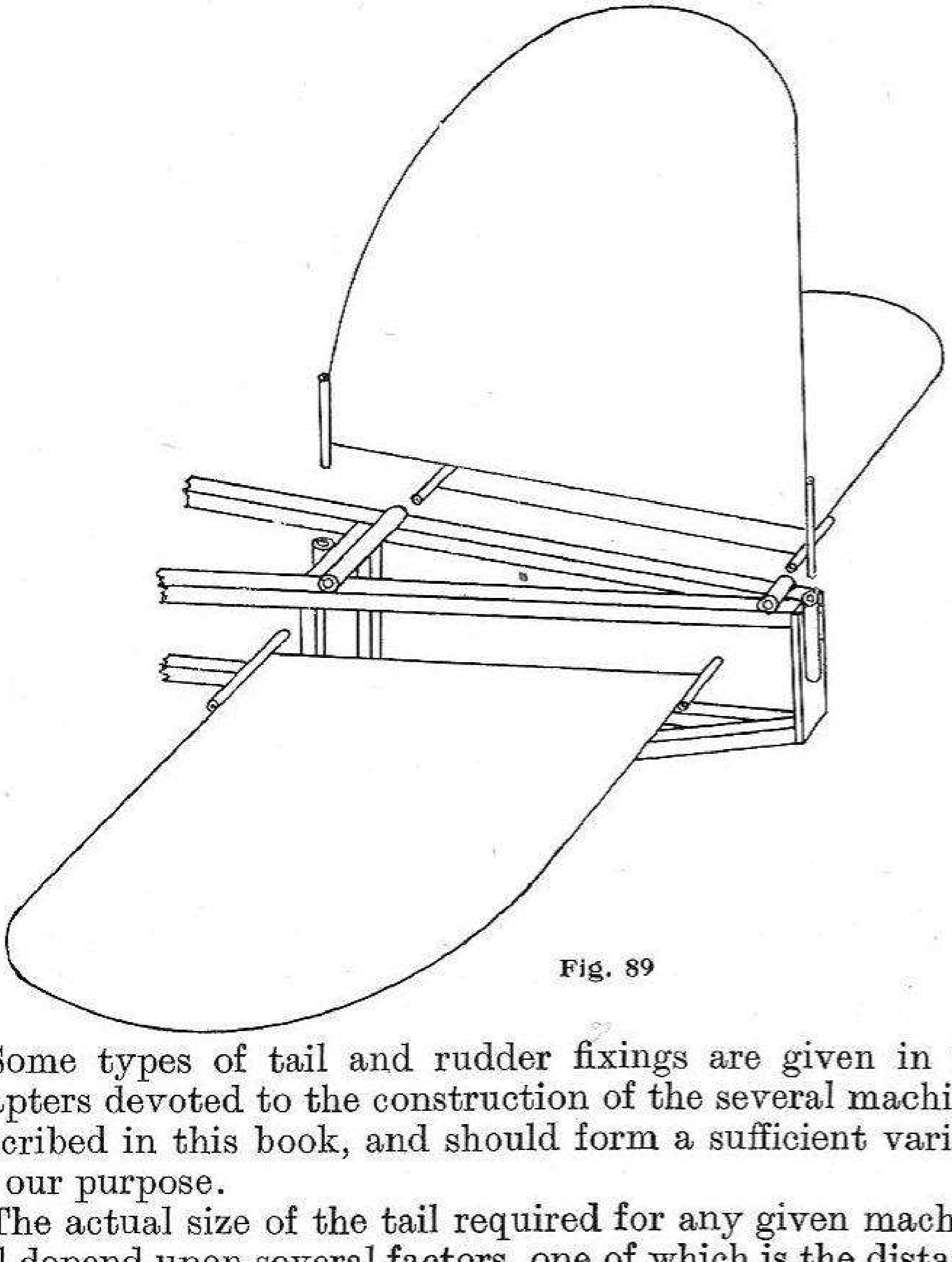

Fig. 89

Some types of tail and rudder fixings are given in the chapters devoted to the construction of the several machines described in this book, and should form a sufficient variety for our purpose.

The actual size of the tail required for any given machine will depend upon several factors, one of which is the distance at which the leading edge of the tail plane is located from the trailing edge of the wing. Generally speaking, a tail set at an average distance from this point (an average distance being approximately two and a half times the wing chord) need possess about one-quarter of the main wing area. The rudder may be one-third of the tail area. As the distance between the wing and tail increases, the size of the tail plane may be lessened. This distance has, of course, its limits, as, if we are to be governed by the fuselage formula, the longer the machine the greater the cross-sectional area of the fuselage must be. We may thus reach a point where the fuselage becomes much too unwieldy for the wing span.

Some constructors prefer to make the vertical fin and each half tail as separate units, which may be affixed to the fuselage by the plug and socket method. It is possible to obtain from the model aeroplane supply stores telescopic celluloid tubing which lends itself very well to a simple adaptation of this system. This celluloid tubing is supplied in sizes from 1/32nd inch diameter upwards, and its application is shown in Fig. 89. It will be seen that short pieces of tube are cemented to the top longerons of the fuselage at suitable points, and that lengths of tube of smaller diameter are cemented to each half wing. As the smaller tubing is of a size just sufficient to be a slide-in fit in the larger, the tail may be securely held by plugging these tubes one within the other. If the socket-tube is split along its length on the upper side, a tighter fit may be obtained.

The rudder is secured in a similar manner, except that the celluloid tubing is cemented in a vertical position. This is an extremely good method, and the ingenious constructor will at once see possible applications to the fixing of the main plane itself.

The necessity for accuracy need not be pointed out. It is especially required that the tail surfaces be flat and unwarped, as the detrimental effect will be much exaggerated by the fact that the tail is operating through the leverage of the fuselage.

The advisability of an adjustable rudder on a model may be discounted on two grounds. Adjustable parts usually mean added weight, which is particularly undesirable at the tail end of a model aeroplane. Movable tails are also liable to be accidentally knocked out of adjustment, with disastrous effect if the machine is launched without the defect being noticed. Anything which may so easily upset the trim of a model is to be avoided, especially as the small amount of rudder adjustment necessary may be given by simply warping the tail in the desired direction.

The same objections hold good in the case of trimmers on the rudder fin and elevators on the tail plane. However, if some light-weight system can be evolved which will provide a rigid fixing in any position, these refinements may be incorporated. In any case, they should be designed in such a manner that, once adjusted, they become a permanent feature in the line-up of the aeroplane, or, failing this, some locating system should be embodied which will enable an exact duplication of adjustment to be attained at all times.

CHAPTER VII

UNDERCARRIAGES

Although the duties of the undercarriage on model aeroplanes are to assist in the " take-off " and the landing, it would be incorrect to say that the undercarriage does nothing when the model is in the air. It certainly does nothing useful, in fact, all its " activities " are detrimental to the machine's performance. First, the weight forms a load which the wings must carry, and, secondly, the resistance of the undercarriage to forward motion through the air adds still more to the drag which the thrust must counteract.

Could we dispense with the undercarriage, our models would give us far better performance on less power, but as such a course is not advisable, let us consider how we may lessen the evils and, if possible, use them to our advantage.

We cannot construct an undercarriage which has no weight, so we must do the next best thing and make the structure as light as possible. On the light-weight machines this presents few difficulties, as the landing and " take-off " stresses are very small, and a simple structure will usually suffice. The heavier machines present greater difficulties, as not only is the undercarriage called upon to bear the increased weight of the model in landing, but this weight is moving comparatively fast. Actually, for a machine of given weight, the landing stresses go up as the square of the speed, i.e., at twice the speed four times the stress is imposed on the landing gear. This complicates the undercarriage construction on heavy-weight models, until, as in the case of racing machines, it becomes one of the chief problems of design.

The light-weight or duration class of model is, however, the type with which constructors seem most concerned, and none of the problems which confront the designer of speed machines need trouble them. All that is required is a construction which is light, reasonably rigid, and capable of absorbing small landing shocks.

The position at which the undercarriage may be fixed to the fuselage has a bearing on the machine's performance. By placing the undercarriage well forward of the centre of gravity, the weight may be utilised in a useful manner as an aid to obtaining the correct balance of the aeroplane. At the same time, the position of the wheels in relation to the centre of gravity has a marked effect on the ability of the machine to take off from the ground. If the wheels are situated very far forward, it will be more difficult for the

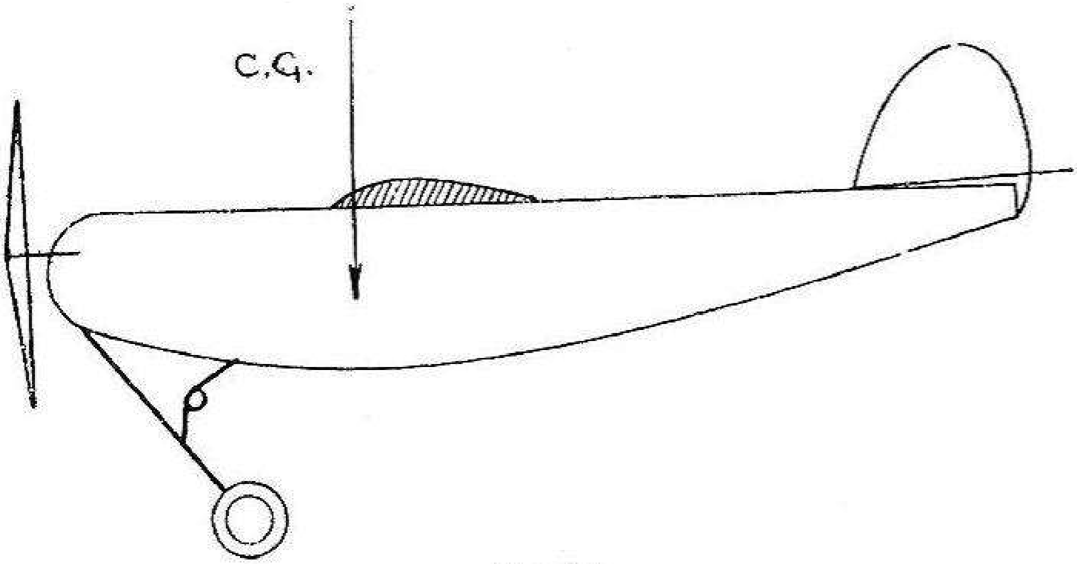

Fig. 90

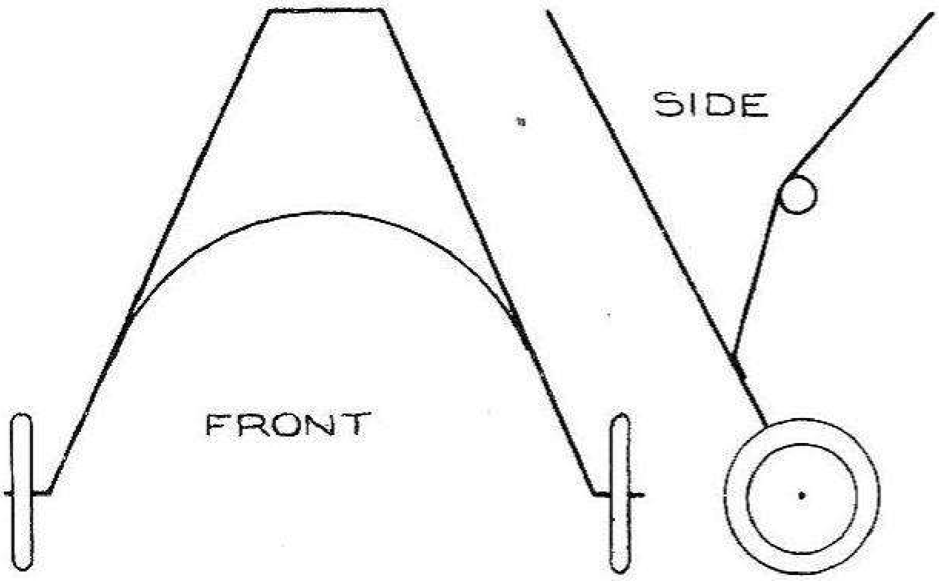

Fig. 91

tail to rise and for the machine to assume the correct take-off attitude. The wheels may be placed in front of the centre of gravity, but only sufficiently ahead to ensure that the machine does not topple over on to its nose in landing.

We see, then, that although the weight must be well forward, it is desirable that the wheels themselves are not too much so. It would appear from this that some form of construction is needed in which the weight of the usual springing device is situated in front of the wheels. Fig. 90 illustrates a popular type of undercarriage for straightforward light-weight models. In this drawing the arrangement is somewhat different from that usually employed for this type, as the front struts are affixed to the nose former, and the wheels "swept back" to the desired position. It will be understood, of course, that this does not alter the position at which the weight of the wheels themselves will act; it is only the weight of the springing which is brought forward. This allows the main plane to be situated a little nearer to the nose of the fuselage.

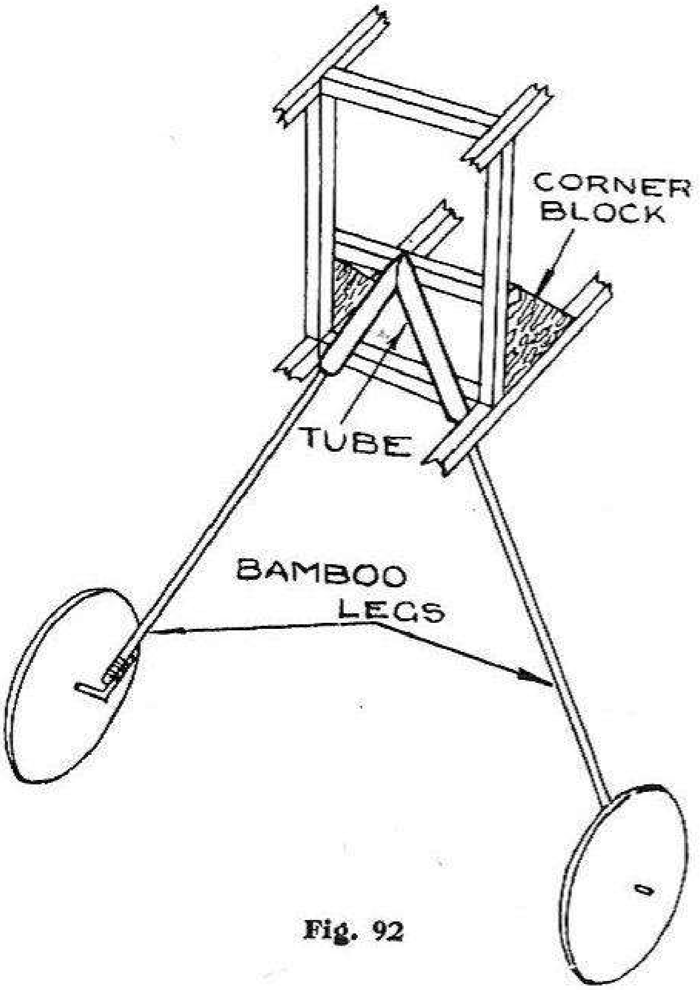

Fig. 92

The construction of this type of undercarriage is too simple to need much description. It is made of piano wire of 18 or 20 S.W.G., and the legs are cross-braced in the manner shown in the front elevation in Fig. 91. In this instance, a curved cross-bracing wire is used, which, though rigid enough for the purpose of bracing, is not so liable to entangle itself in grass as a straight wire situated lower down.

Only very simple undercarriages are needed on the light-weight class of machines, and a suggestion is given in Fig. 92. In this construction the legs are of thin bamboo, and no springing is incorporated other than that of the bamboo itself. The legs are a push-in fit in tubes which are bound and cemented to the bottom longerons, and braced at the tops with struts. These tubes may be of celluloid (similar to that mentioned in the chapter on tail units), or may be constructed of rolled cartridge paper or gummed paper tape. Only one piece of tube is made, this being bent into a " V " to provide two sockets. The bamboo legs may be withdrawn from the tubes for ease in transit.

Although so simple, this type of structure is quite efficient, and may even be used on balsa models of eight ounces in weight, if a little attention is paid to strength. This applies especially to some form of bracing of the tubes within the fuselage.

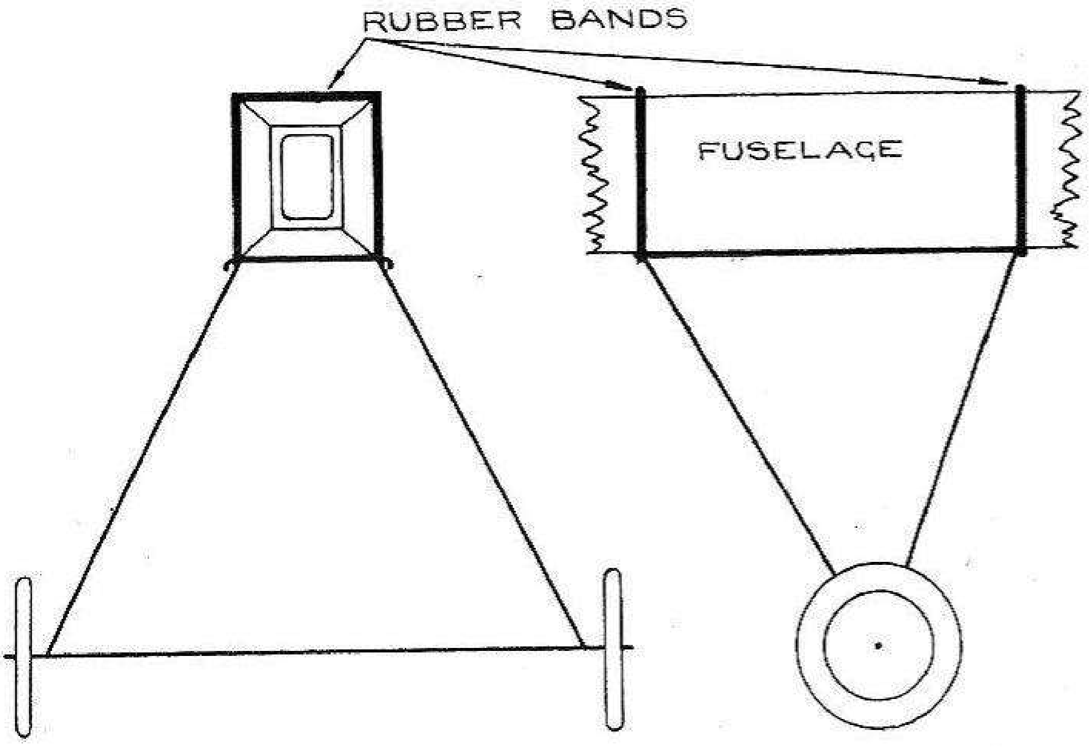

Fig. 93

A detachable type of undercarriage, used with success in America, and suitable for machines of the light-weight class, is shown in Fig. 93. This is a separate structure of piano wire, and does not depend on the fuselage for rigidity, being attached only by rubber bands which provide the springing. An additional feature is that the undercarriage may be moved along the fuselage, and should help considerably in obtaining the correct trim of the machine.

Another American type will be seen in Fig. 94. Here, the actual undercarriage is rigid, all the spring being obtained by bending the axle into a " C " shape, close up to the wheels. This is quite efficient for models up to four ounces ; a suitable gauge of wire being 20 S.W.G.

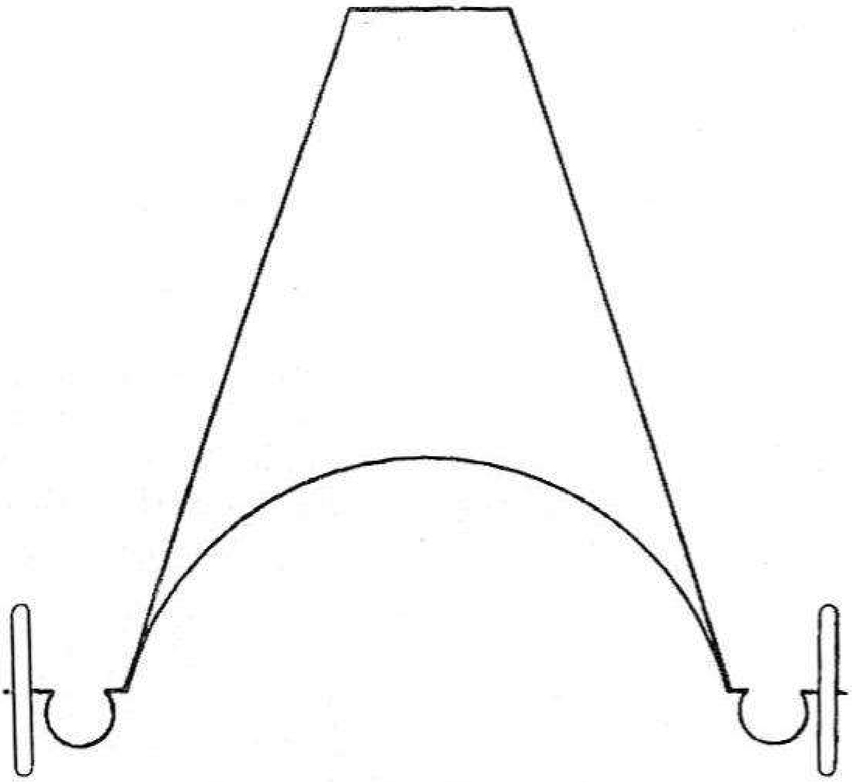

Fig. 94

This undercarriage, in an altered form, is depicted in Fig. 95, where the " C " spring is replaced by a short spiral spring. This is wound from 20 S.W.G. piano wire, and the wheel axle is sweated into one end. The undercarriage leg is secured, in like manner, to the other end of the spring, a short length of " free " spring being left between. It is interesting to note that a strengthened edition of this undercarriage has been used with success on a model of 24 ozs. weight !

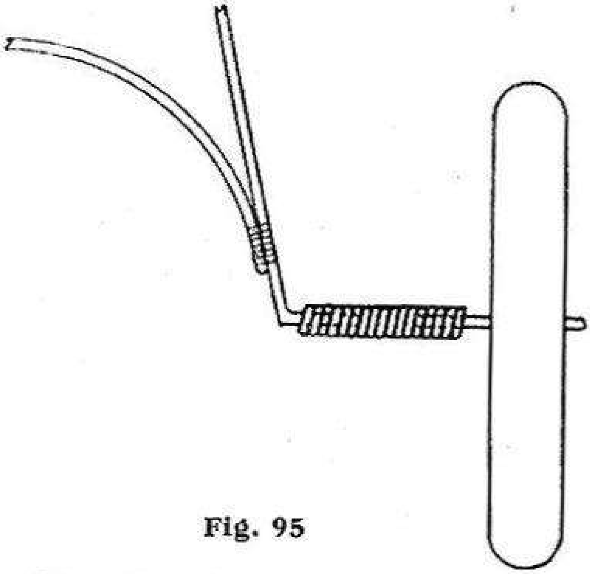

Fig. 95

Although the system of springing the wheels at the axles may appear rather a makeshift job, it has the advantage that the legs may be made rigid and to any desired shape or section. Thus, a very realistic appearance may be given to the undercarriage; a particularly good feature in scale or semi-scale work.

Fig. 96 illustrates part of such a "scale" undercarriage, with an imitation "oleo leg" carved from solid balsa. Springing is effected by simply securing the wheel axle to the rigid leg by means of rubber bands.

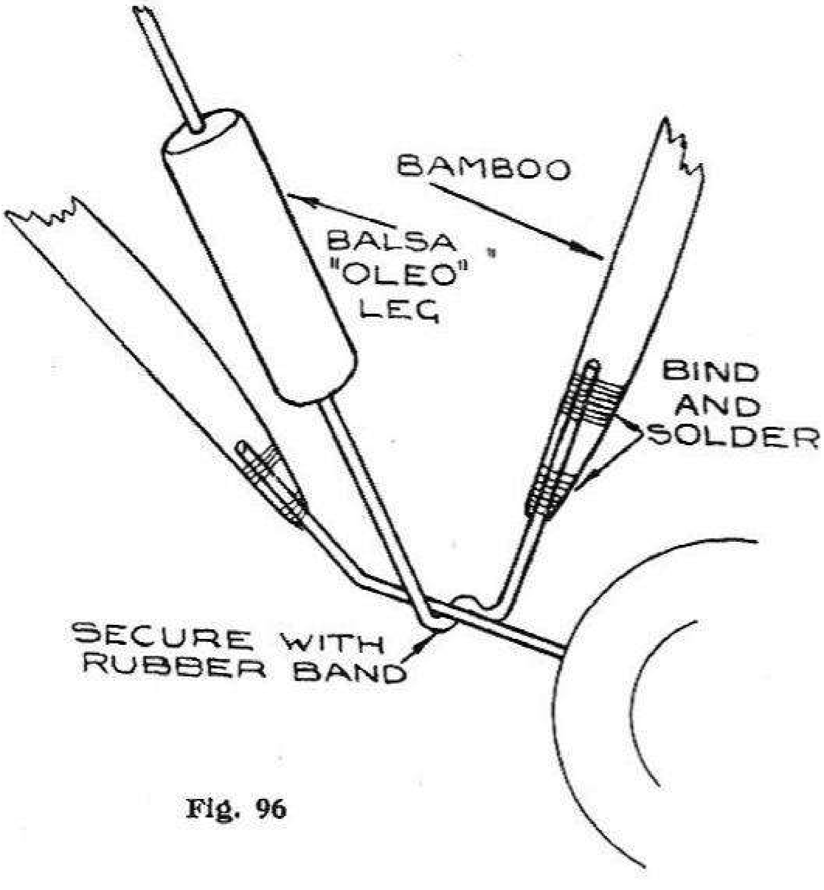

Fig. 96

The wire undercarriage has many merits, one of which is its low resistance or drag, yet many constructors of light-weight or medium-weight models prefer to use something a little more elaborate. Several good systems are in operation;

one of the most successful of which is shown in Fig. 97. In this, the rear legs are of bamboo, suitably shaped to a streamlined section, the front legs being paper tubes. These tubes are made by rolling stout cartridge paper around a wooden former, one side of the paper being coated with "Seccotine" or gum to ensure rigidity when set. Elastic bands pass through these hollow front legs and are anchored to hooks suitably situated on the rear legs and the fuselage, as shown in the drawing. The tube has been shown with a portion cut away at each end, so that the hooks and rubber bands may be visible. The rubber bands (indicated by a thick line in the drawing), being always in tension, hold the structure rigid, while the front legs prevent it from collapsing in a forward direction.

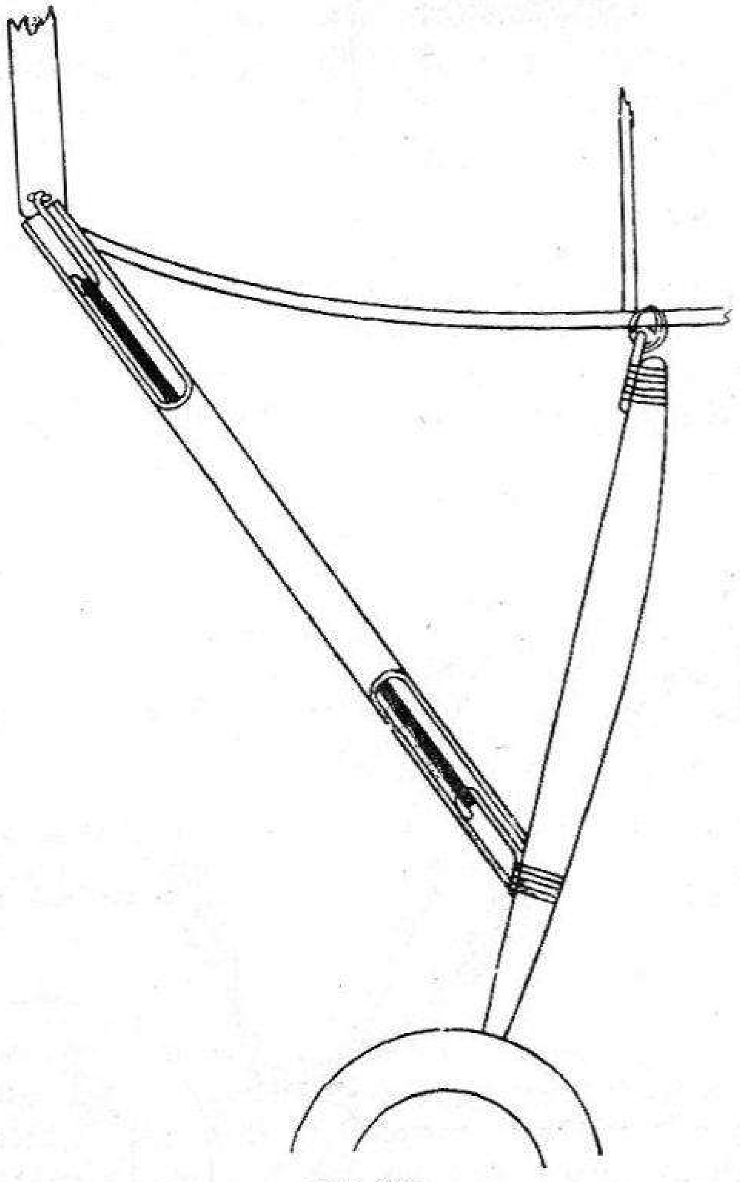

Fig. 97

When the model lands, the rear legs are knocked backwards, which movement, however, is checked by the pull of the rubber bands concealed in the front legs. As the amount of springing may be regulated by the number of rubber bands used, it is possible to obtain an undercarriage which is rigid enough for rise-off-ground flights, yet resilient enough to absorb considerable landing shocks.

This method is suitable for quite heavy machines, and has actually been used with great success on a petrol-engined model. In this case, the hollow legs were constructed of birch three-ply, steamed to shape around a wooden former, and bound with silk and doped. Also the rubber bands were attached between sliders which operated within the ends of the tubes.

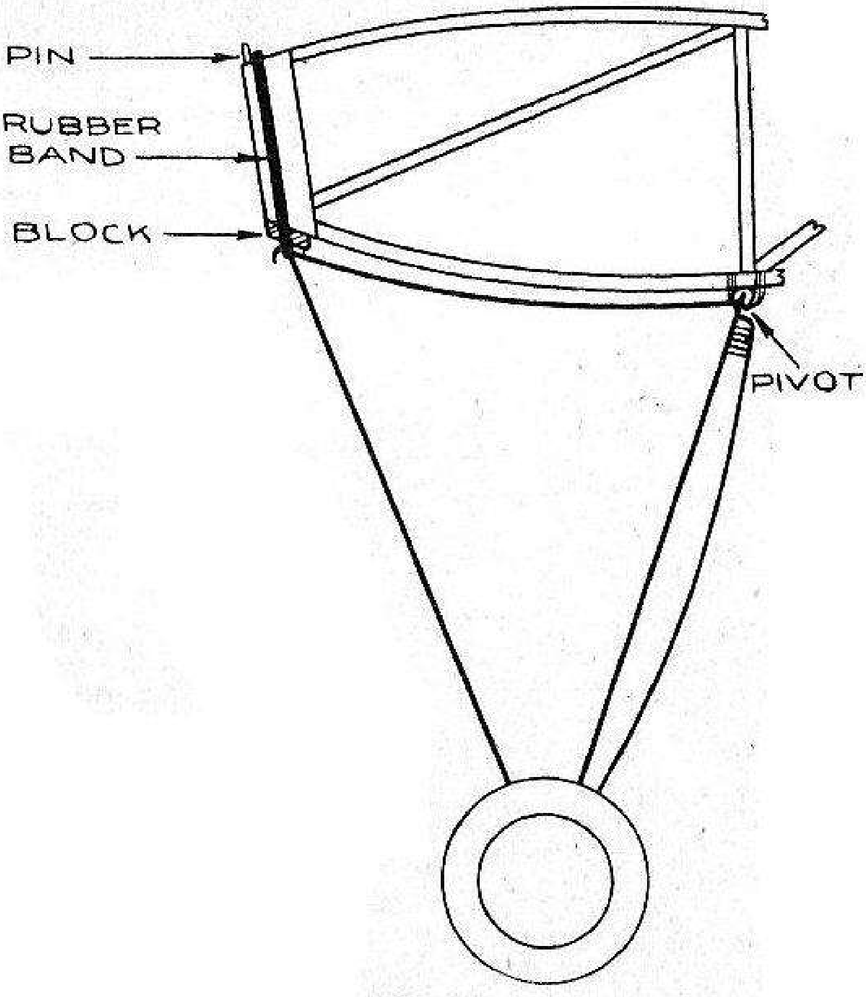

Fig. 98

In this undercarriage, most of the weight lies in front of the wheels, which is, as we have seen, a desirable feature. It may be constructed in various weights to suit the class of aeroplane to which it may be fitted; in short, it is a most useful arrangement.

It must be remembered that model 'planes " fly " or glide to the ground at a flat angle. Unlike the full-sized aeroplane, there is no " flattening-out " of the machine just before alighting. A model undercarriage, therefore, need only " give " in a backward direction ; that is, against the direction of the landing impact.

An undercarriage which fulfils these conditions may be

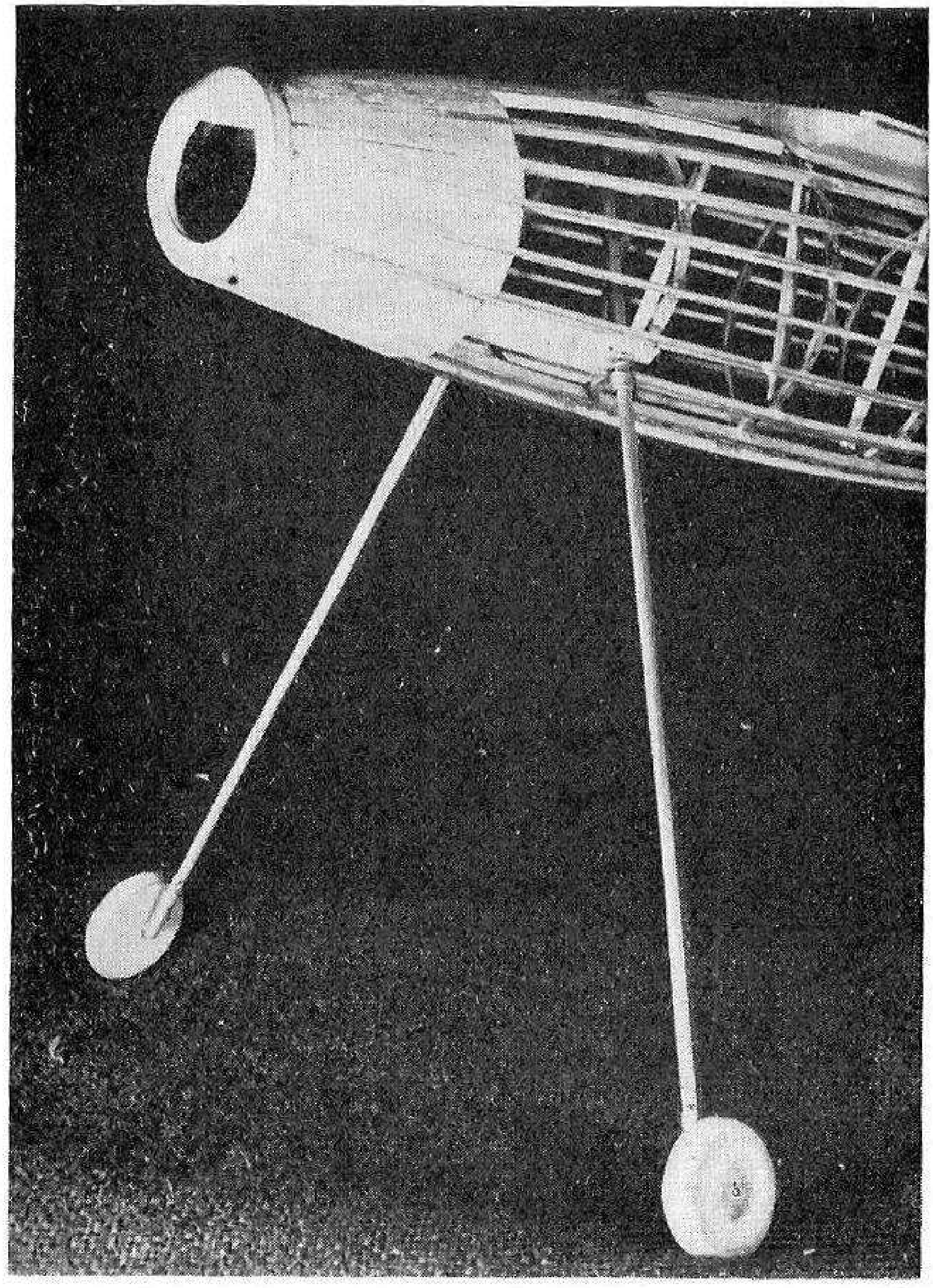

Fig. 99.—Undercarriage for light-weight machine. The bamboo legs pivot in slots in the fuselage, while the tops of the legs are secured to the top decking with rubber bands

constructed on the bell-crank principle, and is suitable for models of four ounces weight and upwards. The illustration in Fig. 98 is practically self-explanatory. It will be seen that the undercarriage is pivoted at the top of the rear legs ; an elastic band, passed over the nose of the fuselage, allowing the undercarriage to spring backwards on this pivot. The legs must, of course, be cross-braced, and it is advisable to glue and pin a small piece of hard wood under the nose of the fuselage, to withstand the small impact when the undercarriage returns to position. The small block is shown in the drawing, together with one of two pins placed in the top of the nose former to locate the rubber band.

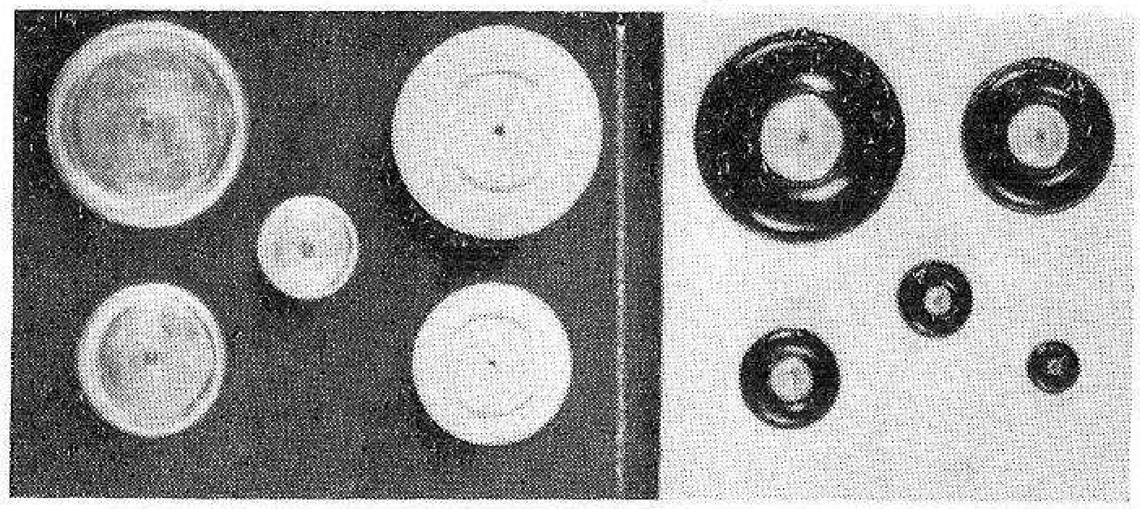

Fig. 100

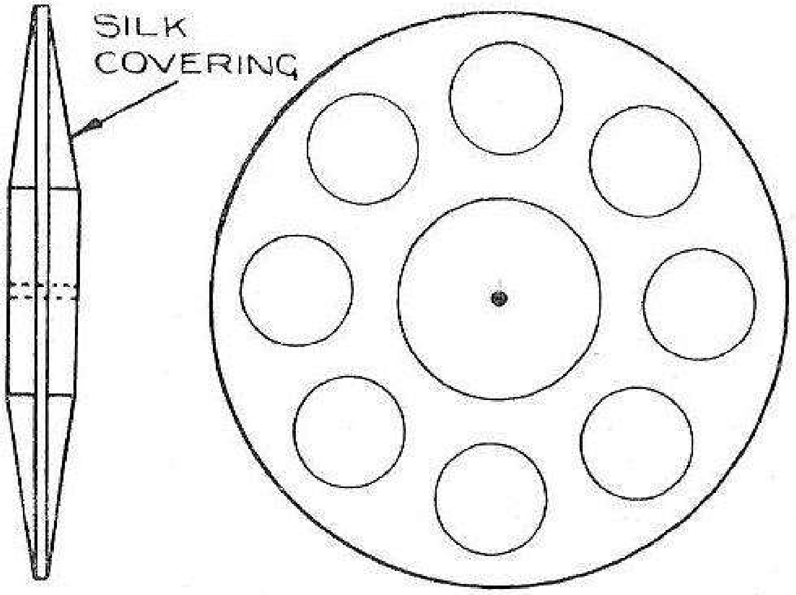

Fig. 101

Although, in its lighter forms, this is quite a suitable arrangement for light-weight machines, it may be used quite successfully on the heaviest models. It may be of all-wire construction, or bamboo legs may be incorporated, as shown in the drawing. This is another good type for scale model undercarriages, as the structure is rigid and may be made to any desired shape.

There are so many types of wheels which may be purchased from the model supply stores that it hardly seems worth while to make these oneself. Wheels may be obtained in celluloid, aluminium and turned balsa. Some of these commercial wheels are shown in Fig. 100.

Those constructors who may wish to make their own, may do so to the plan suggested in Fig. 101. Plywood or balsa discs, suitably lightened by fretting, form the basis, to the sides of which smaller discs of $\frac{1}{4}$ inch plywood are glued. The whole is then covered with silk and doped, and the spindle hole drilled and bushed with brass tubing.

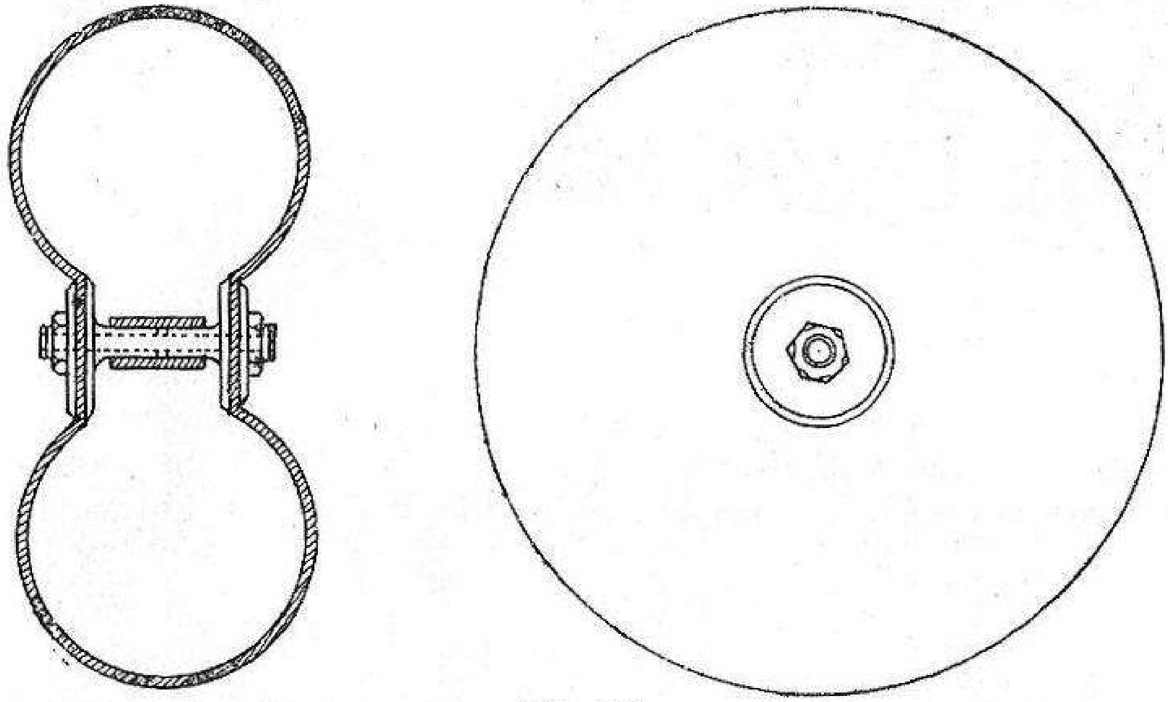

Fig. 102

We are indebted to Mr. A. M. Willis for the following excellent method of making pneumatic wheels for heavy-weight models. Fig. 102 illustrates this very clearly, and the construction should present no difficulties to those fortunate enough to have access to a lathe.

A brass bush is made with two collars turned on it as shown. The outer ends of this bush are threaded up to the collars, and the bush itself drilled through from end to end to form the spindle hole. Next, a small hole is drilled through the centre of the shaft, at a right-angle to the spindle hole, and a piece of rubber tubing is forced over one of the collars on to the centre of the bush. This forms the air valve.

Now obtain an ordinary rubber ball, and make two small holes in positions exactly opposite each other. The bush is now located in these holes, in the manner illustrated, and secured with nuts and washers from the outside. The rubber ball thus becomes a tyre, which is inflated through the spindle hole with a cycle pump, the other end of the hole being stopped with the finger during the process. Wheels of this type have been used with great success on the heaviest petrol models.

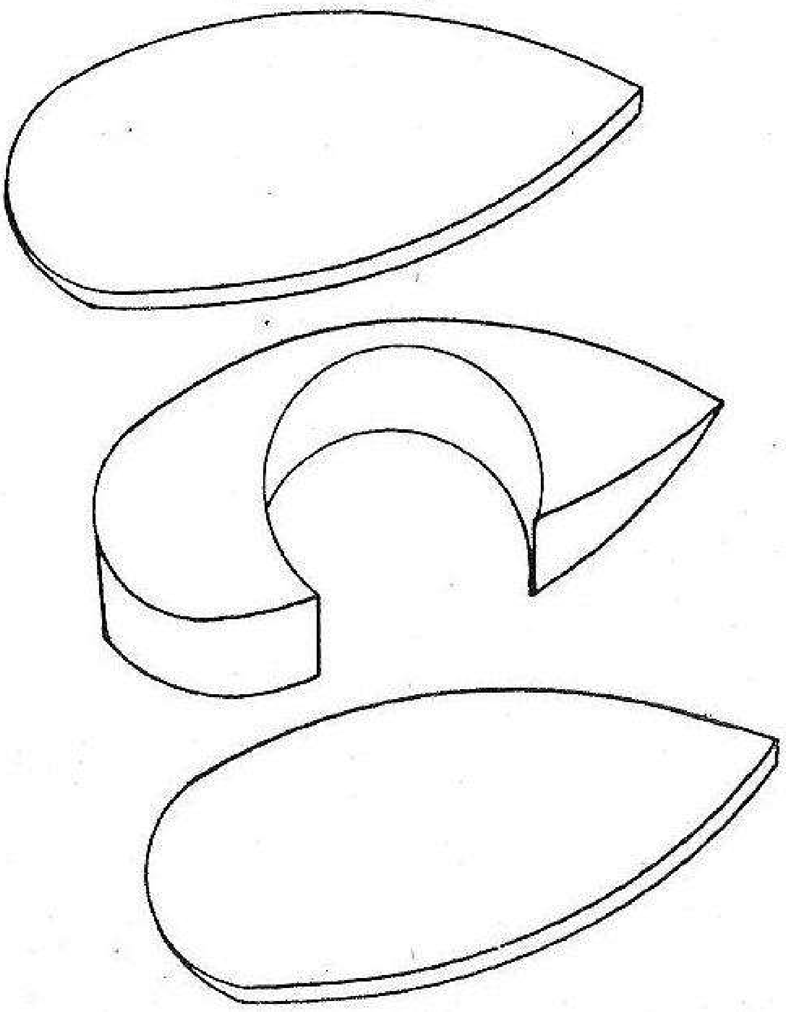

Fig. 103

Similar wheels, though not of the pneumatic types, may be made with sponge rubber "golf practice balls." Do not buy the very light kind, but those of fair solidity, made from "close grained" sponge rubber. The method of manufacture is similar to that just described, except that no provision need be made for inflation. A wheel of about $1\frac{1}{2}$ inches diameter may be made in this manner.

It is sometimes the practice to streamline the wheels of a model by means of "spats." These are used more for the sake of appearance than for any actual aerodynamic value; the speed of model 'planes usually being too low for "spats" to be of any value. Possibly, from a flying point of view, they are a handicap, yet they undoubtedly give a finished look to a model, especially one with any pretensions to "scale" appearance.

Celluloid spats may be purchased, but as they are often difficult to obtain, they are usually carved from balsa. The most suitable method is shown in "exploded" view in Fig. 103, and consists in making a centre piece of $\frac{1}{2}$ inch or $\frac{3}{4}$ inch balsa and gluing sides on afterwards. The whole is then sand-papered to shape, and the wheel spindle inserted through the sides.

In designing any undercarriage, care must be taken to ensure that the legs are long enough to enable the propeller to clear the ground when the machine is alighting at its *natural gliding angle.* This usually means that the legs will have to be longer than is desirable from the point of view of weight and drag, but this cannot be avoided. Also see that sufficient track width is given between the wheels, especially on models of large span.

The effect of the side area of wheels should not be overlooked, as this has a considerable influence on a machine's behaviour owing to the lever effect of the undercarriage legs. Large wheels will usually have to be offset by a large rudder fin.

It must be borne in mind that slightly heavier wheels than are ordinarily necessary may be used to lower the centre of gravity, and the pendulum effect of these will often correct for any tendency to "wallow" which a machine may possess.

CHAPTER VIII

COVERING, DOPING and FINISHING

Although the various materials which are commonly used for covering model aeroplane structures have been dealt with in Chapter II, a few remarks on the actual covering process may be helpful.

The extensive use of balsa wood for model frameworks is reflected in the almost exclusive use of paper tissue as a covering for the light-weight models. Balsa structures are seldom silk covered, as the weight and strength of silk is not usually required in machines of the all-balsa type. However, medium-weight all-balsa 'planes may be very satisfactorily covered with Japanese silk, especially if the wood has been used with a scientific regard for strength.

For the lighter frameworks, as used on ultra-light weight and duration models, the light Japanese tissue papers are required. These may be stuck to the structure with cellulose cement, dope, or a dextrine mounting paste. The latter is probably the best.

If tissues are held up to the light a " grain " will be seen running across the paper. In covering, always apply the tissue with this grain running in the direction of the greatest length. For instance, in covering a wing the grain should run from wing-root to wing-tip and not across the chord. The reason for this is that under the action of dope the paper contracts more *across* the grain than *with it,* and a better finished job is possible if the tissue is used as stated.

Much bad and wrinkled covering is caused through an attempt to cover too much of the structure at once. On small wings this may be successful, but for spans of over 24 inches the wings should be covered in sections, the wing ribs forming convenient anchorages for the paper. It is usually helpful to cover the under-surfaces first. Light tissue paper cannot be applied very tightly, but this does not matter greatly as dope has a considerable tightening effect on paper. The chief concern is to apply the paper evenly, without tight and loose places.

Medium-weight models may be successfully covered with bamboo paper, which may be affixed with mounting paste or Seccotine. Bamboo paper is not suitable for extremely light and fragile structures as it absorbs a considerable quantity of dope, and will therefore contract a great deal, either warping or breaking the framework. It should be applied with the same regard to the grain as is necessary with the lighter papers.

Covering models neatly with Japanese silk is no simple task, the great difficulty lying in obtaining an even tension on the silk. This must be applied firmly and evenly; not too tightly, but without tight and slack places. If these exist the dope will cause the silk to wrinkle at the slack points. Silk should be applied damp, and the greatest length should run parallel with the selvedge edge, in the same manner as the grain of tissue paper. The most suitable adhesive is Seccotine, but, as already mentioned, Scotch glue may be used. Dextrine mounting paste is also excellent.

Unlike paper, Japanese silk may be applied in quite large pieces, in fact, it is desirable to cover as much framework as is convenient at one time. This is possible because silk may be freely pulled and manipulated, and portions may be lifted and restuck as many times as may be necessary. This is impossible with paper, as its frail nature does not allow of much manipulation.

The purposes of doping tissues and fabrics are to render them airproof, to tighten or contract them, and, to a certain extent, to make them less vulnerable to weather conditions. The base of dopes is cellulose, which is obtained from cotton, wood pulp and similar substances of vegetable origin. Dopes are of two types: *cellulose acetate* dopes and *nitro* dopes, the former, in a diluted state, being that generally employed for model work. Nitro dopes are of a heavier nature, take longer to dry and do not contract to the same extent as cellulose acetate dopes. These latter have considerable powers of contraction, but are susceptible to changes in humidity. This means that doped coverings will tighten greatly under the influence of dry warmth, but will slacken out if subjected to moisture, such as is present in the air on damp days.

Doping with clear acetate dope should be done in a warm, dry room, at a temperature of not less than 70 degrees F. If moisture is present in the air, or the covering is not perfectly dry, white patches will appear on the doped surface. This is known as " blushing," and may sometimes be rectified by again doping the covering under dry conditions.

Paper tissues contract considerably more than silk, as the fibres of the paper definitely shrink. Pure silk, on the other hand, cannot be shrunk by water or dopes, but is tightened by the shrinkage of the actual dope itself which soaks into the fibres and draws them closer together.

It is advisable to apply at least one coat of clear acetate dope before using coloured dope, which is obtainable in a variety of colours and also in aluminium. Several thin applications are preferable to one or two heavy coats, and these applications should be left to dry naturally and not hastened by excessive artificial heat.

On extremely light frameworks, the application of even one coat of acetate dope is often sufficient to warp the structure. In these cases a nitro dope may be used. *Banana oil* is the most common nitro dope for our purpose. and is very suitable for doping such things as light tail units. Extremely light, paper-covered models, especially those used for indoor flying, need not be doped at all ; the paper being sprayed with water and left to dry. This has a considerable tightening effect, in fact, all paper covering should be treated in this manner before doping.

It should be remembered that nitro dopes and cellulose acetate dopes will not mix, although a coat of nitro dope may be applied over dry acetate dope. This is often desirable, as the outer coating is then not so affected by conditions of the atmosphere. Do not, however, apply acetate dope over coloured nitro dope, as this will dissolve and blister the first coating.

On any but the lightest of models at least two coats of dope should be applied. The heavier machines may require as many as six thin applications, usually three of clear dope and three of coloured.

Wings which have become warped in the making or covering may usually be straightened out by doping and allowing to set whilst secured to a flat board. The wing building jig illustrated in Fig. 53 may be used for this purpose. Thin strips of wood may be tacked to the jig, to lightly grip the leading and trailing edges of the wing. The wing is first doped and then gently forced between the wooden strips which will hold the edges of the wing flat upon the boards until the dope is set. Small weights, placed at suitable intervals, will also aid in keeping the wing in position. It must be remembered, however, that if a wing structure is built badly out of truth this method will only hold the wing true whilst the doped covering is tight. On damp days the covering will slacken, and the wing will, in all probability, resume the warped shape to which it was constructed.

Models intended for indoor flying must be of the lightest possible weight, and for this reason *microfilm* covering has been evolved. This method really consists of using the dope itself for a covering, no silk or paper tissue being utilised. There are several formulae for the manufacture of microfilm, as although clear acetate dope may be used, a special preparation gives the better results. Two popular American formulae are given :—

No. 1	Collodion	½ ounce.
	Cresol Phosphate	8 drops.
	Add to the above mixture :—	
	Ethyl Actate	8 drops.
	(If too sticky add a little collodion : If does not form, add a little ethyl).	
No. 2	3 parts Collodion.	
	1 part liquid Ether.	

Microfilm mixtures may also be purchased ready made.

The procedure for using microfilm is as follows :—

Obtain a shallow dish, preferably of rectangular shape, and about six inches wide and ten inches long. Next, construct a wire frame, as shown in Fig. 104 ; six inches long and four inches wide. The handle of this frame should be set at an angle to enable the frame to lie flat upon the bottom of the dish, with the handle protruding.

Now fill the dish with water, at a temperature of about 70 degrees F., and submerge the wire frame, letting it lie upon the bottom of the dish. A small quantity of the microfilm mixture is now dropped into the water, and will spread itself as a thin film upon the surface. With some mixtures, a more even film is obtained by dropping the microfilm liquid from a height of about two feet.

In a few seconds the microfilm will be set, and may be lifted from the water by raising the wire framework from beneath. Without touching with the hands, the film is now placed upon the wing or fuselage structure, the edges of which have been lightly smeared with rubber solution as an adhesive. As the dampness evaporates, the microfilm will contract upon the framework and form an even covering.

Wire tails and rudders are invariably covered with oil-proofed silk, which may be stuck to the framework with cellulose cement, Seccotine or Scotch glue. Oiled silk, as it is usually called, has, however, a slippery surface, and is, for that reason, rather difficult to fix tightly with adhesives; the material slipping from its stretched condition before the glue or cement is set. A better method is to sew the fabric to the wire frame. Care must be taken not to distort the wire framework by pulling the silk too tightly, which will result in a permanent warp.

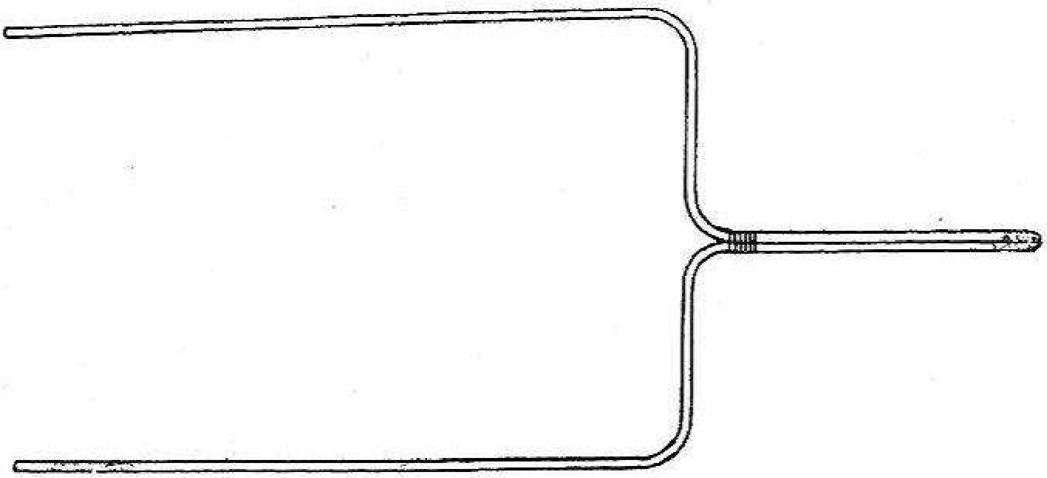

Fig. 104

For some reason a prejudice exists in the minds of some model builders against finishing a model with some form of decoration. This may be because attempts are often made to improve a badly-finished machine by the application of paint; which attempts are seldom successful. Paint, especially of the cellulose variety, also adds much weight if used lavishly. However, a well-made machine deserves a handsome finish, and may often be rendered still more attractive by the use of a little decoration. Moderation seems to be the watchword, and one should be careful not to overdo things.

Very pleasing effects may be obtained by picking out the edges of fuselage and wings with a suitable colour. For instance, a cream doped aeroplane will look very well outlined in green, especially if the colours are separated by a thin black line. Aluminium and blue or aluminium and orange are also extremely pleasing ; two shades of one colour give a restrained and tasteful finish. Light and dark blue are particularly effective.

Ultra-light-weight or duration 'planes will not usually be decorated, as all superfluous trimmings will be avoided. Medium-weight or heavy-weight machines, on the other hand, may be treated as suggested. Cellulose lacquers are suitable for silk-covered machines, but should be used sparingly on account of the weight. Poster colours are better for paper-covered models, being lighter in weight, but ordinary water colour will not " cover " well on doped surfaces.

CHAPTER IX

RUBBER MOTORS

It has been a matter of some difficulty to decide how this chapter shall be handled. Most literature on rubber motors becomes a list of technical formulae which can only be of interest to the mathematical mind. There exists, however, a large body of constructors that has neither the time nor the inclination for mathematical problems. The constructors in this group are by far the most numerous, and are those that require a rough and ready "rule of thumb" guidance; arriving at their conclusions by personal experiment.

The reason why these aeromodellists are so neglected is the very good and sufficient one that there exists no short method by which the amount of rubber required to fly a given model may be determined. This must be obvious when one reflects that the factors of weight, wing-loading, speed, propeller size and pitch, and, lastly, the drag all have a voice in the matter. The skilled builder and flyer knows by experience the approximate power required for any machine, basing his opinion on the requirements of previous aeroplanes.

As a considerable mass of mathematical data has been accumulated on the subject in the past few years, we have decided that any sketchy outline, such as could be included in this book, is worse than useless. We have, therefore, refrained from giving any mathematical statement of the case, especially as most of the formulae and results have been published from time to time, and should still be available to those interested. The alignment chart in Fig. 105 will give some idea of the safe number of turns which a given motor will accommodate. By placing a straight edge across any two known values, the third may be read on the remaining column.

Theoretically, the number of turns which a given length or weight of rubber will take is in inverse proportion to the number of strands in which it may be used. Actually the case is less favourable, as the following example will show.

A skein composed of two strands of rubber will accommodate only 70 per cent. of the turns that a single strand of the same length will take. The torque or turning force will, however, be increased to 2.8 times that of the single strand. If four similar strands are used, the possible number of turns will be half that of the single strand, but the torque will be increased to eight times that of the single strand. The more turns which can be put into a motor the longer a propeller will run. From the above it is clear that increasing the strands of which a rubber motor is composed reduces the traction duration of the propeller, but makes the turning force greater.

These properties of rubber motors have a decided effect on the design of model aeroplanes. The duration 'plane, for instance, is affected as follows :

We know that the greater the speed with which a wing is moved through the air the greater the lift obtained, which means that a greater weight of machine may be sustained in flight. Conversely, the lighter the model the less speed is required to sustain it. Less speed may be obtained by using a slowly revolving propeller, which will obviously require less power to supply the torque or turning effort than the same propeller running at a higher speed. We have seen that the fewer the number of strands of which a rubber motor is composed the less torque delivered, also the greater the number of turns which may be put into the motor. As the duration of motor run goes up with the number of turns employed, we arrive at the golden rule that duration 'planes must have a light wing-loading, which, because of constructional and landing problems, means that a light model aeroplane is necessary.

On heavily-loaded machines high flying speed is essential. This requires a high thrust from the propeller, demanding large power and torque at the expense of duration. This is well illustrated in the model speed aeroplane, which literally hurls itself through the air by a great application of power for a few seconds.

As these questions are closely linked with the problems of propellers, this chapter should be read in conjunction with Chapter X.

It must not be overlooked that if a given machine is required to fly twice as fast, the power necessary will be eight times greater ; the power required being proportionate

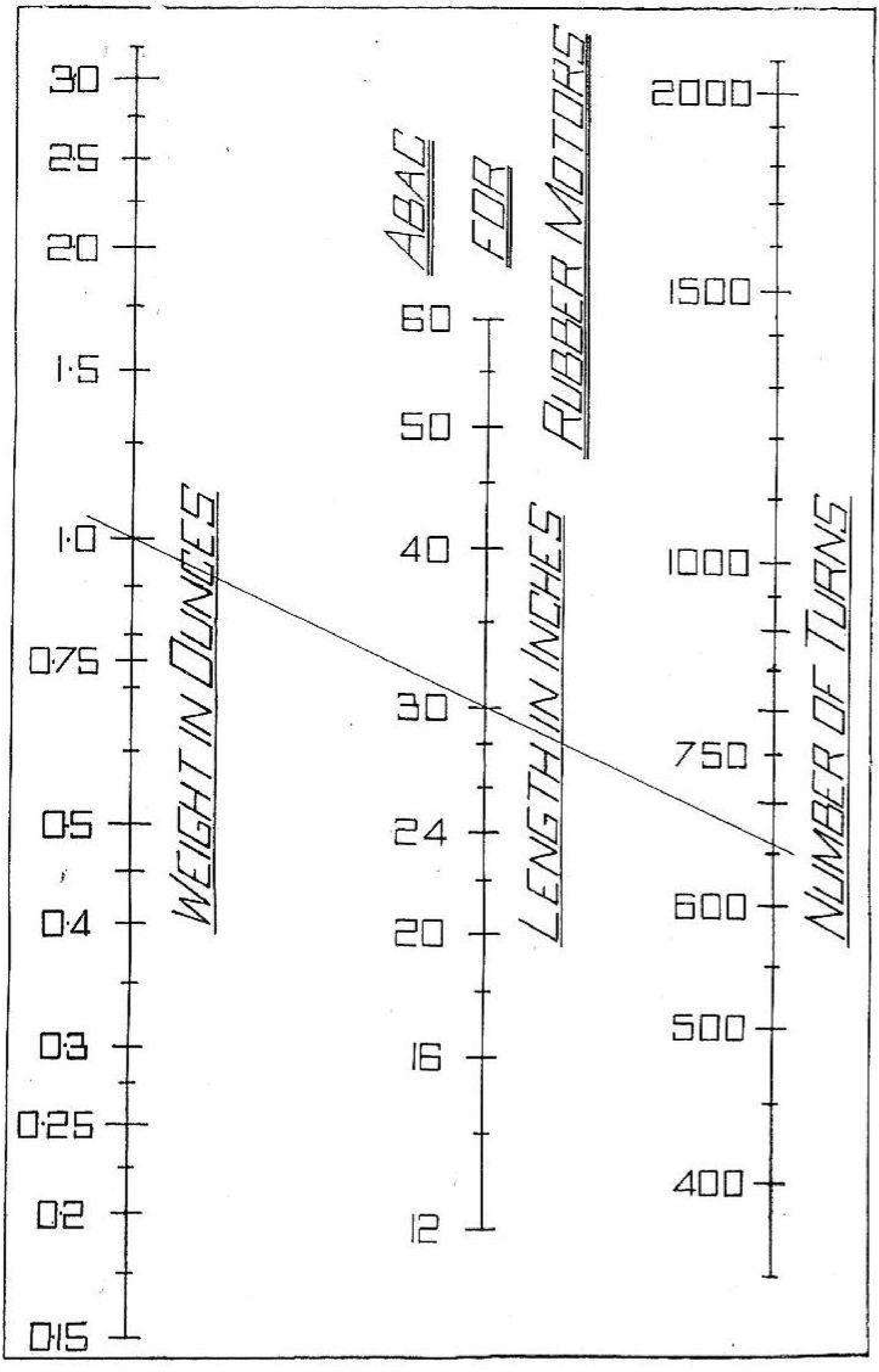
ABAC FOR RUBBER MOTORS
WEIGHT IN OUNCES
LENGTH IN INCHES
NUMBER OF TURNS
30
2.5
2.0
1.5
1.0
0.75
0.5
0.4
0.3
0.25
0.2
0.15
60
50
40
30
24
20
16
12
2000
1500
1000
750
600
500
400

Fig. 105

to the cube of the speed.

If a motor of a given number of strands is doubled in length, the number of turns which may be put into it will be doubled also, as the possible number of turns is in direct proportion to the motor's length. We shall do well, in view of this, to make the fuselage as long as possible, that it may contain a motor of maximum length. It is usual to employ a motor which is one-quarter as long again as the distance between the rubber hooks, and the motor should be stretched to two or three times its normal length when being wound. This will raise the number of turns above the number possible if the motor is wound unstretched. The torque will also be considerably increased.

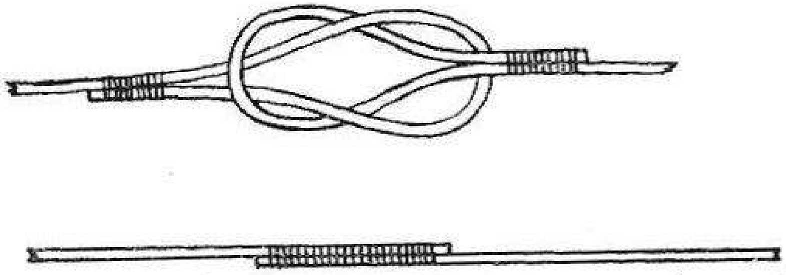

Fig. 106

To obtain a long motor run and yet retain a sufficient torque, two or more thin skeins of rubber may be geared together. The results obtained from geared rubber skeins are not so favourable as one might at first imagine. It is true that if a skein of a given number of strands is divided into halves which are geared together, the possible number of turns will be increased. Unfortunately, this does not mean that a longer duration of flight will necessarily be obtained. This is partly due to the power loss in the gears themselves, but chiefly to the extra weight which the gearbox and extra fittings add to the machine.

This increase in weight will mean an increase in speed, possibly making a stronger undercarriage necessary, again adding to the weight. We may then arrive at a point where an actual increase in the amount of rubber is required ; the original number of strands being insufficient to provide the power necessary to turn the propeller at the higher rate of revolution which the faster flight demands. Although we have only considered the effect upon the flight duration due to the actual propeller run, the *total* time of flight may be still further reduced owing to the faster gliding speed of the machine.

Rubber for the propulsion of model aeroplanes is obtainable in several widths ranging from 1/32nd to ¼ inch. The thickness varies according to the width. The rubber generally employed in this country is known as "brown rubber." The Americans, by the way, call this "black rubber," their own brown rubber being much lighter in colour. One should remember this when calculating from American formulae, which usually states whether black or brown rubber is concerned.

The best method of joining rubber is by means of a reef-knot, as shown in Fig. 106. When the knot has been pulled tight, the ends are bound with floss-silk, the rubber being well stretched whilst being bound. The ends of light rubber motors may simply be bound together with floss silk, as in the lower illustration in Fig. 106. Rubber should always be stretched whilst binding, and the join made before the rubber is lubricated, otherwise it will slip when the rubber is wound.

Good rubber will stretch to eight times its length without harm, and will return to its normal size when released. Nevertheless, it may be stretched beyond the safe point, when it will remain, to a certain extent, in a stretched condition. This causes rubber to become fatigued after repeated windings, when not so much power may be stored in it. One pound of new rubber will store 3,500 ft. lb. of energy, and it should be noted that if only 80 per cent. of the maximum turns are applied, only 2,000 ft. lb. of energy is stored. As the last few turns impart so much energy, it is desirable to give a rubber motor as many turns as possible for competition flying and record attempts. This maximum must be gradually attained.

Gears

Gears, for many reasons, have fallen into disuse in recent years. One of the reasons, although not the most important, is their reputed unreliability. How often has one chuckled at the whirring of an unwinding skein, and remarked to one's neighbour, "Aha! another gear gone west!"

This has been due, in the main, to the inability of the average constructor to build an efficient gear, and, in particular, to the inability to solder the brass gears to the shafts.

As gearing is essential on large, heavily-loaded models, especially of the racing type, a brief description of a method of making an exceptionally strong gear is given.

A piece of 18 S.W.G. mild steel, about ½ inch wide and 4 inches long, is folded in halves, as in Fig. 107, and the positions of the holes for the shafts and screws marked upon it.

These holes may now be drilled. By cutting the metal along the fold, or by filing, two plates will be obtained, in which the holes are exactly positioned, if the handbrace has been held squarely to the job during drilling.

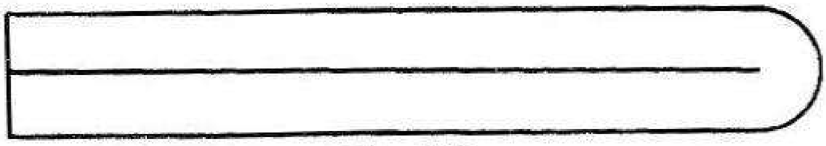

Fig. 107

The correct distance between the holes may be ascertained by meshing the gear wheels, and measuring the distance between the *sides* of the spindle holes, taking, of course, two left-hand sides or two right-hand sides, as the case may be. This is more accurate than trying to guess the centres of the spindle holes (Fig. 108).

Before actually drilling the plates, a piece of tinplate should be drilled at the proposed distances, and the gears—mounted on the shafts—tested for mesh. A fresh template may be made if the holes are not the correct distance apart, and this is preferable to scrapping the whole job.

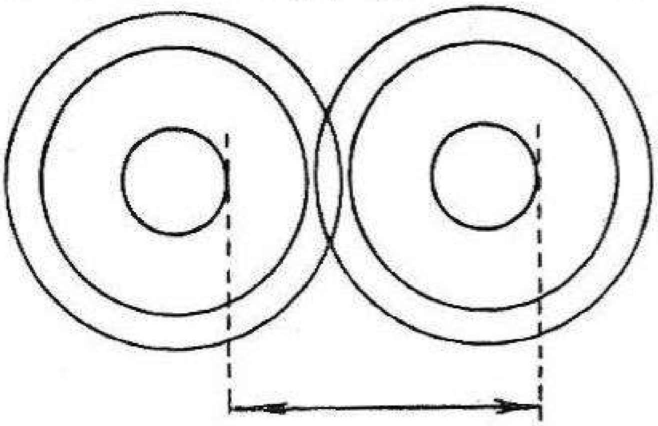

Fig. 108

While gears should run freely, they should not be too much out of mesh. On the other hand, it is a grave error to mesh gears too tightly, as the teeth will then " bottom," and great friction will result.

Now take the block of wood which is to be used as a nose-piece, and after screwing the front plate into position, carefully drill two holes through the block, using the plate as a jig. Pass the steel spindles through the holes in order to locate the back plate, and screw the latter into position. The plates are now removed, and the holes in the wooden block opened out to clear the spindles. These details take a little longer time to attend to than would be occupied by doing the job in a slip-shod fashion, but is the only way to secure reliability.

Now for the most important part of the job.

Steel knitting needles make the best and most easily procured shafts. They are cheap, accurate, straight and tough, and also have the advantage of being readily hardened for tool making. Take one of the needles of the required size, and carefully file it half-way through, as shown in Fig. 109. Now heat to a bright red, and plunge into water. This will make the steel reamer "dead hard." In this condition it cannot be used as a tool, for it is exceedingly brittle. Clean the point with a piece of fine emery cloth, so that any changes in colour may be seen, and hold the tool in a very small flame. As the steel heats up, colours will form on the bright portion ; first a light straw colour, changing to dark straw, then brown and finally blue. The reamer should be withdrawn from the flame immediately it becomes dark straw colour, and at once plunged into cold water. If you are not sharp enough, and the steel becomes too hot, re-harden it by heating to redness and quenching out as before, and again try the tempering operation.

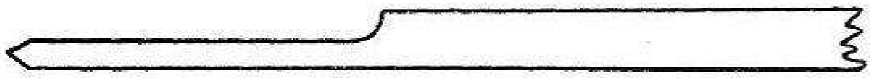

Fig. 109

In passing, it may be remarked that it is difficult to understand why amateurs are so afraid to try this very useful art of making and hardening small tools. The whole process is amazingly simple if the above directions are followed, and the amateur need never be at a loss for all kinds of small or special tools, which may be made from knitting needles, silver steel rod or old files.

To continue. Take the gear wheels, and slowly and carefully open out the spindle holes with the reamer you have made. Be sure that it follows the hole which is already truly drilled in the gear wheel. They will then fit perfectly, and run truly.

Now heat up the ends of the shafts to redness, and bend them to form the rubber hooks. Do not harden. Clean the shafts, and thread the gear wheels upon them. Apply a little *Baker's Fluid* or *killed spirits* to the spindles at the joint, hold the gear and shaft in a gentle flame, and, as the flux boils off, apply a stick of solder to *one side* of the gear. The solder *must* flow through to the other side. If it does not, the gear will sooner or later come adrift—probably sooner. Assuming that you have not made the solder run through, do not continue to heat the job until it becomes covered with oxide, and impossible to solder. Take the work out of the flame, and apply more flux on the side on which the solder has not yet appeared. *Do not* apply solder to this side, but carefully re-heat, until the solder does run through. When it does, you may be reasonably sure that it is so firmly fixed that it is possible to break the shaft by turning it (holding the gear in the vice), rather than turn the shaft in the hole. This can actually be demonstrated.

It will, of course, be necessary to place the backplate upon the shafts, between the gears and the rubber hooks, before the gear wheels are sweated on.

The gears and shafts are now assembled to the nose block, two cup washers are threaded into place, and the two gears ascertained to be in perfect mesh. With a soldering bit, apply a bead of solder to the washers to hold the shafts in place. No difficulty will be encountered with the solder running through the washers on to the plate, if care is taken to see that the plate is *not* clean. Fig. 110 illustrates this gearbox

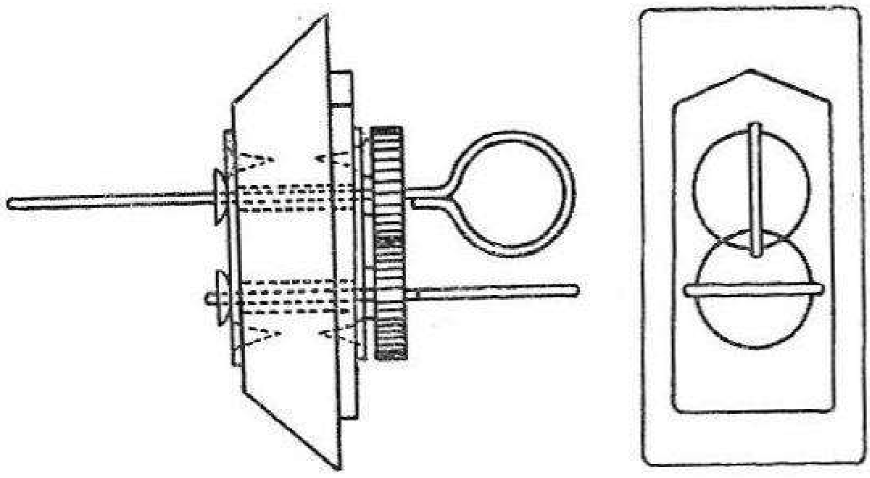

Fig. 110

The most frequent cause of failure of gear trains is slipping of the gear wheels on the shafts. This will never happen if the wheels are sweated on in the manner described. The mere melting of blobs of solder on to each side of the gear wheels will definitely not do. If the shafts are fitted by means of a special reamer made from a piece of the shaft itself, the joint will be as strong as if it were silver-soldered, and very much better for the purpose, as the hardness of the shafts and gear wheels will not be so much interfered with.

Multi-skeined rubber motors could form a chapter in themselves. They are used mostly in racing machines, where an enormous power output is required for a short period. In these machines, it becomes necessary to carry as much rubber as the fuselage can hold, and, at the same time, to put as many turns as possible into it. An arrangement wherein each skein runs in the opposite direction to its neighbour, is to be favoured. This not only decreases the torque effect upon the fuselage, but, more important still, does away with the tendency which each skein has to roll around its neighbour when all are running in the same direction. In Fig. 111, an arrangement of five pinions is shown, in which four of them run in the same direction. In Fig. 112, the same number of gear wheels is shown arranged so that each revolves in opposition to the next.

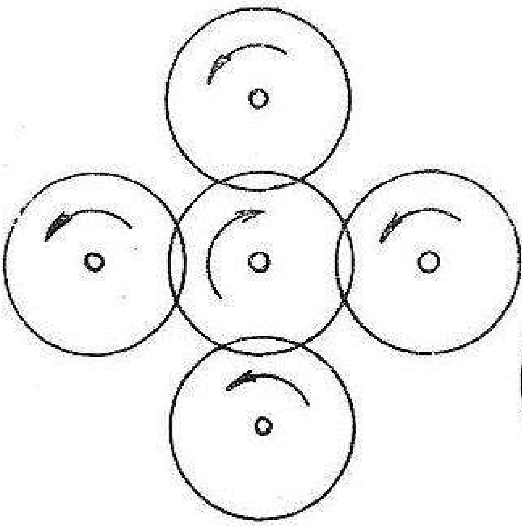

Fig. 111

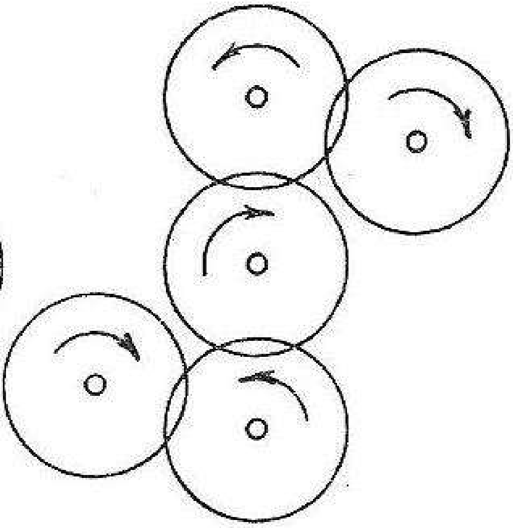

Fig. 112

A simple twin skein gear may be made from standard components, which may be bought from the model stores. Complete gear assemblies may also be obtained quite cheaply. These are suitable for the light and medium-weight machines.

but will not stand up to the special requirements of the speed machine, which requires exceptionally heavy gears, stoutly made on the lines already indicated.

An efficient gear-box may be made by assembling the gears and shafts directly on to the nose block, in the manner shown in Fig. 113. No dimensions are given, as these will naturally vary with the size of the gear-box required. The bearings consist of screwed brass bushes, which are located in holes in the nose block and nutted at the back. The brass gear wheels are sweated on to the shafts, which may be of piano wire or steel rod, and care must be taken to ensure that the gear teeth mesh correctly. The shafts are retained by means of cup washers soldered on to the shafts. These washers also take the thrust.

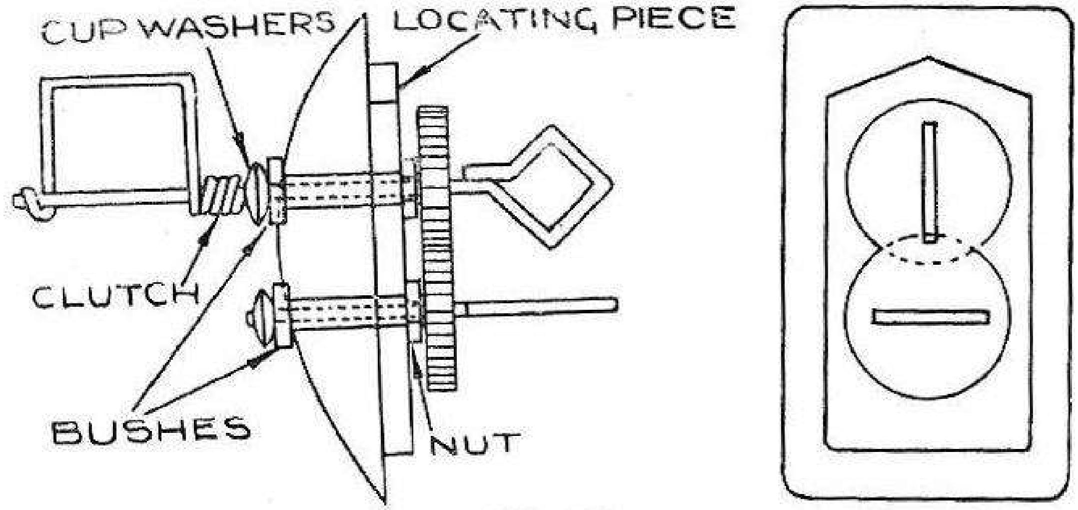

Fig. 113

An effective propeller clutch is also shown; this is also sweated to the shaft. The rubber hooks illustrated are of particularly good design, as the rubber motor does not tend to slip off the hook so easily as is the case with circular hooks. Hooks, both front and rear, should be covered with cycle valve tubing, to prevent cutting of the rubber motor.

Tensioning Rubber Motors

In order to obtain as long a propeller run as is possible, it is, as already pointed out, desirable that the rubber motor used should be considerably longer than the distance between the points of anchorage within the fuselage. In the old days, this meant that the exhausted skein lay in a jumbled mass in the fuselage, when its power was expended, with disastrous results to the stability of the aeroplane, due to the uncertain position of the centre of gravity.

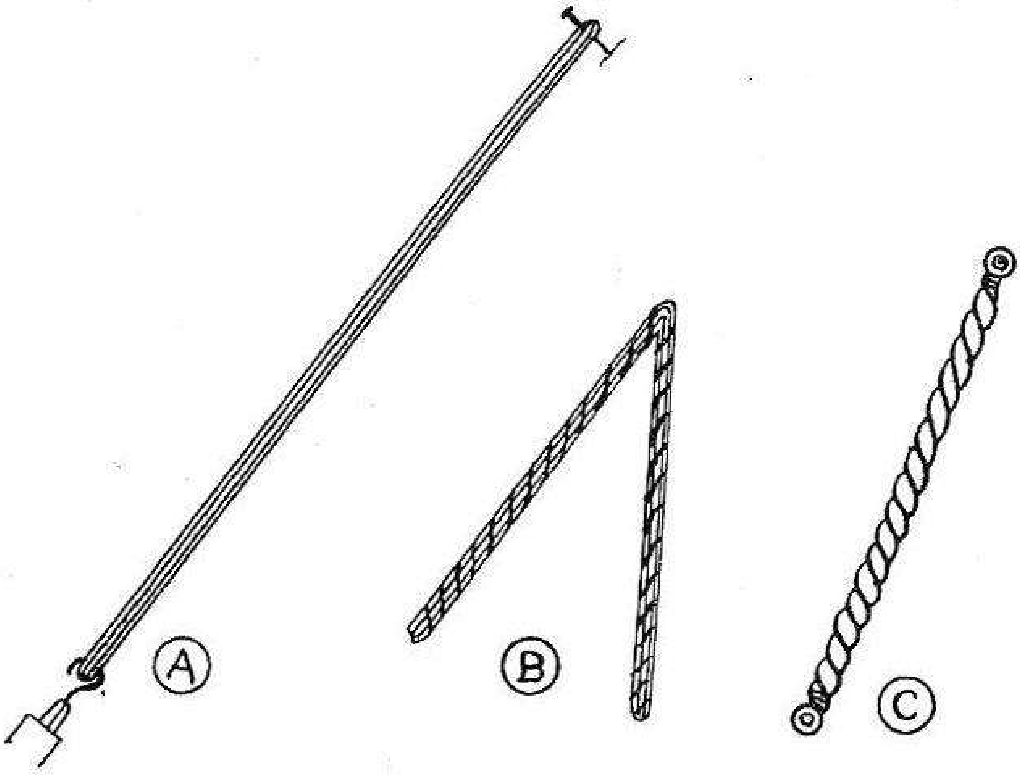

Fig. 114

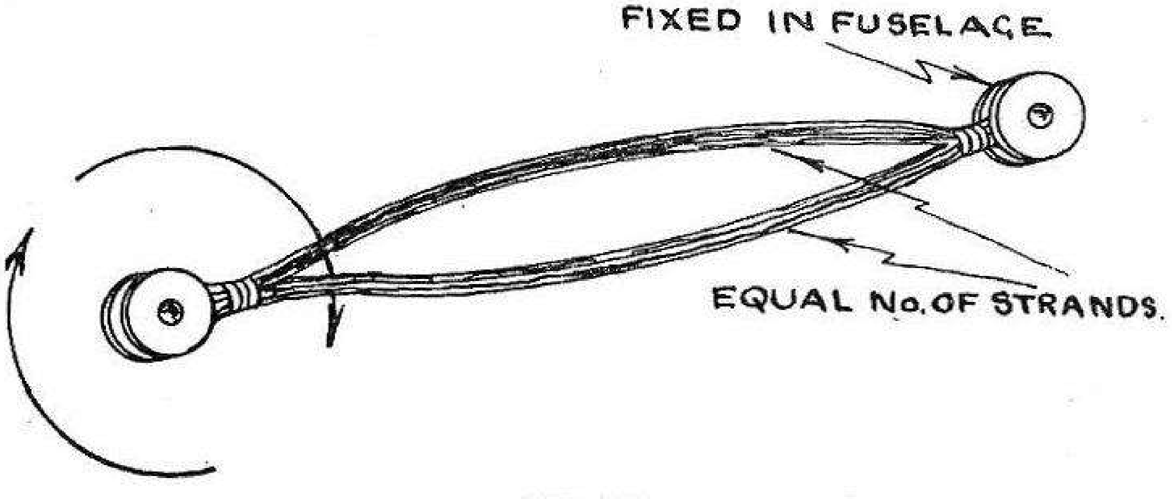

Fig. 115

Several systems have been invented whereby the rubber skein will always return to a predetermined state of tension, no matter how often it is wound and unwound. Credit for the invention of the first rubber tensioning system goes to Mr. H. E. White, of the Northern Heights Model Flying Club, and his original method is still one of the best. It is shown in Fig. 114.

In this system, it is first necessary to make up the rubber skein into one of *twice the length* and *half the number of strands*, of the desired skein. This means that should a motor of

8 strands, 30 inches long, be required, it will be necessary to make this up as a motor of 4 strands, 60 inches in length. Such a skein is shown in Fig. 114, marked (A). One end of this skein is looped over a nail driven into the workbench. The other end is hooked over a wire hook which is held in the jaws of a geared handbrace, as shown.

In this way, a certain number of turns is given to the skein, when it is then doubled upon itself, in the manner shown at (B), and the halves allowed to entwine, one with the other. We are then presented with a twisted rubber skein, such as is depicted at (C) in the illustration. Bobbins are then inserted into the ends, and small rubber bands passed over them to hold the skein neatly. It will be found that the rubber will always return to this predetermined state of tension, the tightness of which depends upon the number of initial turns given in the first winding.

The second system, shown in Fig. 115, is quite efficient, and is, in fact, to be preferred for skeins having up to 8 strands of rubber. It is somewhat simpler than the White system, and the effect is to tighten up the strand with a less number of turns.

As may be seen, the rubber is made up into a skein in the ordinary way, and one end of this skein is fixed, as usual, into the rear end of the fuselage. We then take the free end, and divide the skein into two equal portions, as indicated. It is now necessary only to pass the free bobbin through the loop formed by the parted strands, as indicated by the arrows on the illustration. This winding is done some considerable number of times, until the desired amount of prewind is obtained.

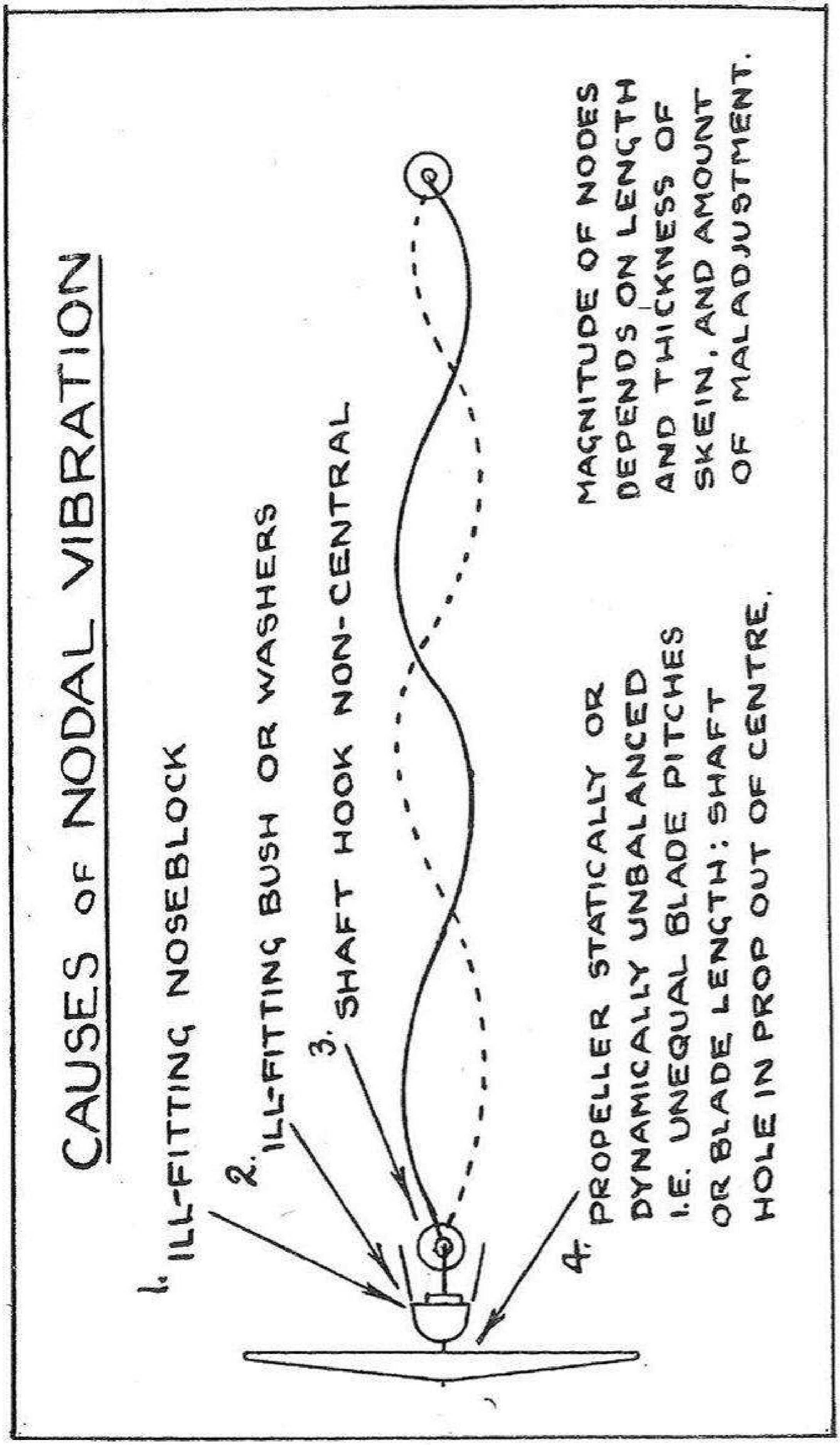
CAUSES OF NODAL VIBRATION
1. ILL-FITTING NOSEBLOCK
2. ILL-FITTING BUSH OR WASHERS
3. SHAFT HOOK NON-CENTRAL
4. PROPELLER STATICALLY OR
DYNAMICALLY UNBALANCED
I.E. UNEQUAL BLADE PITCHES
OR BLADE LENGTH; SHAFT
HOLE IN PROP OUT OF CENTRE.
MAGNITUDE OF NODES
DEPENDS ON LENGTH
AND THICKNESS OF
SKEIN, AND AMOUNT
OF MALADJUSTMENT.

Fig. 116

CHAPTER X

PROPELLERS

The function of the propeller or airscrew on a model aeroplane is to convert the torque given by the power of the rubber motor or engine into the thrust which is required to move the machine forward. Strictly speaking, the term "propeller" is only applicable in the pusher aeroplane; "tractor airscrew" being the correct word to use when speaking of tractor aeroplanes. However, this distinction has become, to-day, a hair-splitting difference which will be ignored here, and the two words will be used to denote the same thing.

The manner in which the propeller or airscrew performs this function is still subject to some difference of opinion. Some theorists hold that a propeller "screws" its way through the air in exactly the same manner as a woodscrew into wood. Others maintain, however, that the blade of a revolving airscrew behaves in a similar manner to a moving wing or aerofoil; a propeller being, in fact, two or more aerofoils revolving around a central axis, the thrust of the propeller corresponding to the lift of the wing.

The larger body of opinion attaches to the latter theory, although it is possible that a certain element of truth lies in both. It is probable that both a "screw" and "aerofoil" action takes place, the prominence of one or the other changing with the speed of rotation of the airscrew. At low speeds the aerofoil action is possibly the chief factor, while at high speeds the screw principle may obtain, owing to the air behaving relatively more like a solid.

As the propeller on rubber-driven model aeroplanes usually revolves slowly in comparison to full-sized airscrews, the aerofoil theory seems to fit the case, and we will, on that account, consider the propeller as two or more suitably shaped and cambered wings revolving around a central axis, and obtaining the thrust or " lift " in the same manner as detailed in Chapter I. Unfortunately, the theory is somewhat complicated by the fact that, unlike the flying wing which moves in a straight line, the " wings " of a propeller describe a helix. Furthermore, every section of the blade travels on a different helix ; the tip, for instance, moving on a much larger helix than sections nearer to the boss. The velocity also is greater at the tips.

We are aware that the faster a wing is moved through the air the greater the lift, and it will be obvious that, under these conditions, more lift or thrust will be obtained from the fast moving tips of the propeller than from the slower moving inner sections. In order to derive a similar thrust from all sections of the propeller blades some modification of the propeller itself is evidently required, and this brings us to a consideration of what is called the *pitch-angle* of the blades. This is really only the angle of attack at which the blades are set, and is exactly the same thing as the angle of attack of a main wing.

Within limits, the greater the angle of attack the greater the lift obtained, so that, although we cannot control the relative speeds of the various sections of a propeller blade, we can, by graduating the pitch-angle, determine the amount of " lift " or thrust which each part of the blade will impart. This is actually what is done ; the pitch-angle of the blades being gradually lessened from the boss to the tip of the airscrew.

A propeller is always referred to as being of a certain diameter and pitch. The diameter is the distance from tip to tip of the blades, while the pitch is the theoretical distance that a propeller will advance in one revolution. Thus, when we say that an airscrew has a pitch of 18 inches, we mean that the blades are set at such an angle of attack that the airscrew will, theoretically, advance 18 inches in one revolution. Actually the term " pitch " has little value except as a term of comparison, as, not only does the distance actually advanced vary with the speed of the propeller's rotation, but the airscrew can only advance per revolution as much as the drag or resistance of the aeroplane *will allow*.

What we obviously require from a propeller is that it will convert the available power into the greatest possible amount of forward movement, and whether this given power is converted into a *fast* forward movement for a *short* time or into a *slower* forward movement for a *greater* time depends upon the size and pitch of the propeller used. Basing our requirements, for the moment, on the duration type of model, it is plain that we require the longest propeller run that we can obtain. This implies the use of a large, slow turning propeller in order that the power from the motor may be expended as slowly as possible. On the other hand, we must be sure that the airscrew is capable of giving enough forward speed to the aeroplane to maintain it in flight.

The following table gives the approximate cruising speeds of models of various wing loadings :—

Wing Loading (ounces per sq. ft.)	M.P.H.	Feet per minute.
1	6	523
1½	7.4	650
2	8.5	740
2½	9.5	815
3	10.4	916
3½	11.2	990
4	12	1,056
4½	12.7	1,122
5	13.4	1,152
5½	14.1	1,212
6	14.7	1,296
6½	15.3	1,344
7	15.9	1,398
7½	16.4	1,446
8	17	1,494
9	18	1,584
10	19	1,672
11	19.9	1,751
12	20.8	1,830
13	21.6	1,901
14	22.4	1,971
15	23.2	2,041
16	24	2,112

Speed varies as square root of loading.

Without actual tests it is impossible to say exactly how fast a given propeller will fly a model aeroplane. Some approximation may be arrived at by multiplying the *effective* *pitch* in inches by the revolutions of the propeller per minute, and dividing the result by twelve. This will give a rough idea of the forward speed of the aeroplane in feet per minute.

The speed of the propeller may be ascertained by winding the motor to a given number of turns, and timing the duration of the propeller run. This time will be about 10 per cent. less during actual flight, as the "air brake" action of the blades will be less owing to the forward motion through the air. It is impossible to compute exactly the *effective pitch* of the airscrew, but this may be taken as 75 per cent. of the theoretical pitch.

The formula for determining the approximate forward speed that a propeller of certain pitch will give to the model is as follows :—

$$S = {}^{\cdot}054\,P \times \text{Rpm.} \qquad \text{where}$$

S = Speed in feet per minute.
P = Pitch of airscrew in inches.
Rpm = Revolutions of airscrew per minute.

This extremely simple formula, which takes into account all losses, should ensure that the pitch of a propeller is suitable for a given model, but there still remains the question of the correct diameter of the airscrew. Although the power may be ample and the propeller pitch correct, an airscrew will still fail to produce sufficient thrust if it is of too small a diameter. As the speed of revolution is limited, and it is, furthermore, desirable to keep the speed as low as possible, the diameter of the propeller must not be too small, certainly not much less than half the pitch. The pitch of an airscrew is often referred to in terms of the diameter ; a propeller having a pitch of 18 inches and a diameter of 12 inches, for instance, being said to have a pitch of $1\frac{1}{2}$ times the diameter. A pitch varying between 1 and $1\frac{1}{2}$ times the diameter is usually the most suitable, and $1\frac{1}{4}$ times may be taken as a good guide.

Starting from this, the most suitable propeller diameter and pitch can only be finally settled by experiment ; bearing in mind that the smaller these are made the faster the propeller will run, the power remaining constant. Some model builders of experience work to the rule that the propeller diameter should be approximately equal to one-third of the wing span of the model. This is for duration machines. The heavier models will, of course, require a fast revolving propeller delivering plenty of thrust. This entails large power and an airscrew of moderate diameter or pitch.

The *static thrust* of a propeller is the thrust obtained by revolving the propeller, at the same time securing it so that it cannot advance at its natural forward speed. This is usually done by connecting it to a weight or spring device which will allow the amount of thrust to be read off on a suitable scale.

Although forming a basis of comparison between one propeller and another, the results of static thrust tests are misleading from a flying point of view. High static thrust is of use in obtaining a quick take-off in rise-off-ground attempts, but is no criterion of the flying capabilities of the airscrew. To test static thrust, a special and somewhat complicated apparatus is required, and the model flyer will be much better repaid by working on the lines we have suggested.

Static thrust tests indicate that, under these conditions, a moderate blade width is most efficient ; a width of about one-tenth the diameter being found to be the best. This seems to be another instance where this type of test is misleading, as some very different results have been obtained in actual practice. American model flyers, who certainly know how to obtain duration, use propellers with a blade width as large as one-fifth of the propeller diameter, and even larger than this. These American airscrews are often of large pitch (sometimes of twice the diameter), and the motors are by no means excessively large or powerful. These conditions must result in a slow moving airscrew. Of course, the American duration models have always a light wing-loading but the remarkable results obtained from these machines would indicate that the use of wide blades for slow-moving propellers makes for efficiency. These wide-bladed, high pitch American propellers are, by the way, very ugly to English eyes.

A great variety of blade shapes is available, and the choice depends upon the purpose for which a propeller is intended. A high-revolution propeller should have a narrow blade, the widest portion of which should be situated about one sixth of the propeller *diameter* from the tips. The blades of the slower turning airscrew may have the widest part nearer to the tips than this, in some cases almost at the tips themselves. Fig. 117 shows a few of the most popular blade shapes ; a typical American duration sample being illustrated.

Propellers for ultra-light-weight or indoor flyers may be made by simply cutting a piece of 1/32nd inch balsa sheet to the desired shape and twisting the blades to the pitch-angle in a jet of steam. These propellers are, however, inefficient, and, for the more ambitious machines, airscrews of definite pitch and blade section are essential. These may be purchased in various combinations of pitch and diameter, and are inexpensive.

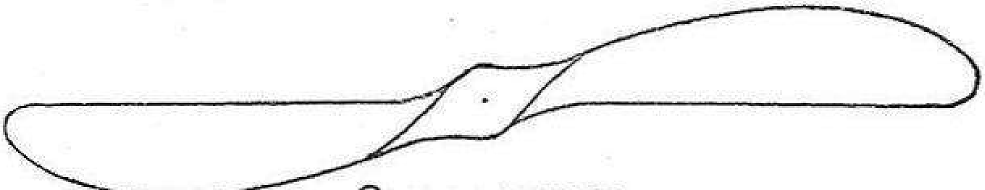
CHAUVIERE

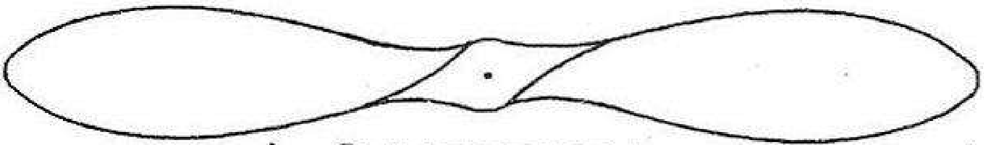
SYMETRICAL

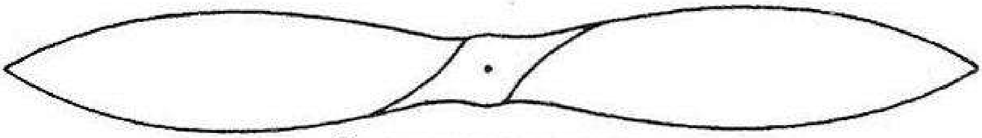
SYMETRICAL

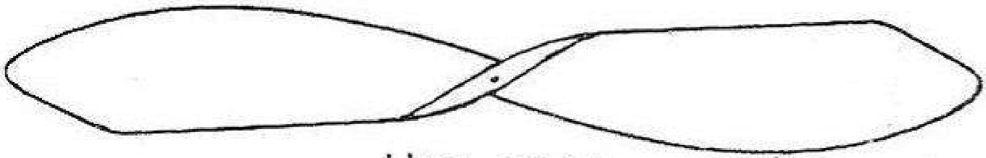
HELICAL

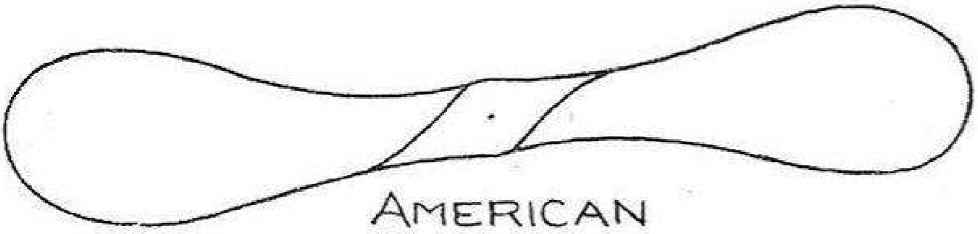
AMERICAN DURATION

Fig. 117

A method of obtaining the size and shape of the wooden block from which an airscrew of definite proportions and characteristics may be carved is shown in Figs. 118, 119, 120. For the sake of example, the propeller chosen is of 12 inch diameter and 18 inch pitch, although propellers of any size and pitch may be designed.

On a sheet of graph paper draw a line (AB), equal in length to the *radius* of the propeller, in this case six inches. The length of the vertical line (BC) is obtained by dividing the pitch by 2π (6.28). This figure remains constant for any diameter and pitch of propeller. In our example this gives $\frac{18}{6.28} = 2.86$ inches. Now complete the triangle by drawing the line (AC). The angle (BAC) will be the pitch angle at the extreme tip of the blade, and is 25½ degrees. The line (AB) should now be marked off in inches (D, E. F), and a point indicated ½ inch from A, and marked (G) in the diagram. Lines are now drawn from all these points (G, D. E. F) to

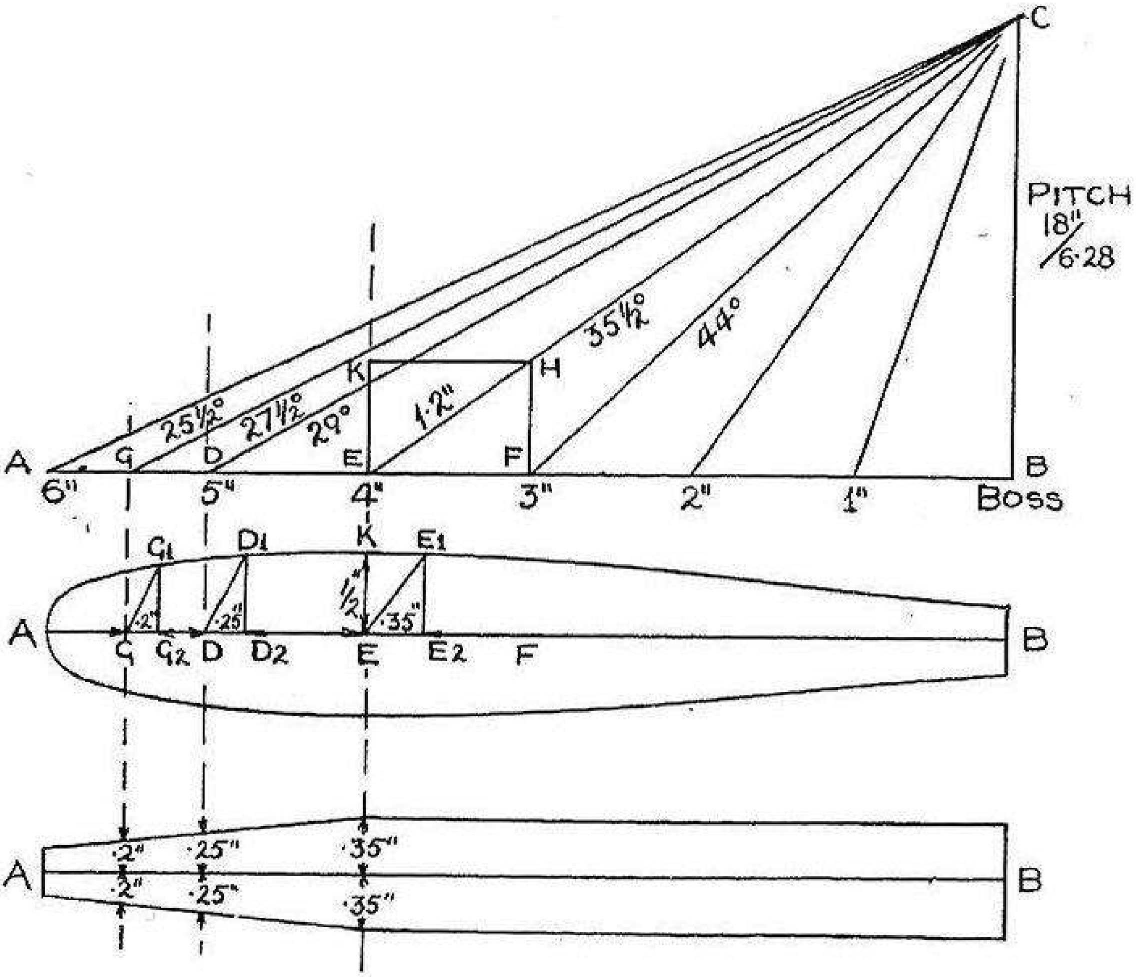

Fig. 118 (top); **Fig. 119** (middle); **Fig. 120** (bottom)

the point C, and the angles which these make with the line (AB) are measured with a protractor. These angles are marked against their respective lines, and are the pitch-angles of the blades at these points. The pitch-angles near to the boss will be found to be not constant owing to the design and shape of the wooden block, and it is impracticable to make these pitch-angles constant. These angles will be too small, but this is of little consequence in model work.

We must now decide upon our maximum blade width and the position of this along the blade. In this instance, we will make the blade width one-tenth of the propeller diameter; that is 1.2 inches, and this shall be situated two inches from the tip.

As the line EC lies two inches from the tip, we must mark the propeller diameter (1.2 inches) along this, and mark the point (H). Now, EH is the diagonal of the propeller block at two inches from the tip. Draw the rectangle (E, F, H, K) which is the section of the block at this point. This is one inch wide and .7 inch deep. We have now completed Fig. 118, which not only gives us the pitch-angles of the blade at various points, but indicates the size of the necessary block.

Fig. 119 is the plan of one propeller blade. First draw a line of the same length as (AB) in Fig. 118. This is six inches long, and forms the centre line of the blade. Along this line mark the points (G, D. E. F), in positions corresponding to those in Fig. 118. At (E) erect a perpendicular ½ inch long (EK), i.e., one-half the width of the block. Now draw the shape of one-half of the blade, which may be of any desired pattern, but the curved edge of this must pass through the point (K), which must be the widest part. The blade shape may now be completed beneath the line (AB), forming a symmetrical blade shape.

To mark the blade sections in Fig. 119 proceed thus :—

From line (AB) draw the verticals (G) (D) (K E). Draw the line (E E_1) at 35½ degrees to (K E). Then (E E_2) equals half the thickness of the block at (E); that is, ·35 inches.

Proceed in the same manner at points (G) and (D); the angles in these cases corresponding to those of (D) and (G) in Fig. 118. The measurements between (G) and (G_2), and (D) and (D_2) represent half the thickness of the block at these points.

A half section of the block is shown in Fig. 120, and it will be seen that the end is chamfered off for a distance of two inches in a manner corresponding to these figures. Thus, at ½ inch from the tip the thickness of the block is .4 inch: at one inch from the tip the thickness is .5 inch, while at three inches and four inches the thickness is .7 inch.

The above method is for setting-out propellers with symmetrical blades. For the very efficient Chauviere type of airscrew the procedure is slightly different. These propellers are set out, in the first stage, exactly as in Fig. 118. Fig. 121 shows the subsequent stages and it will be noticed that the base line (AB) forms one edge of the propeller, while the resultant measurements along line (AB) represent the total thickness of the block at the various points. It will also be seen that the block for a Chauviere airscrew is only chamfered off on one face.

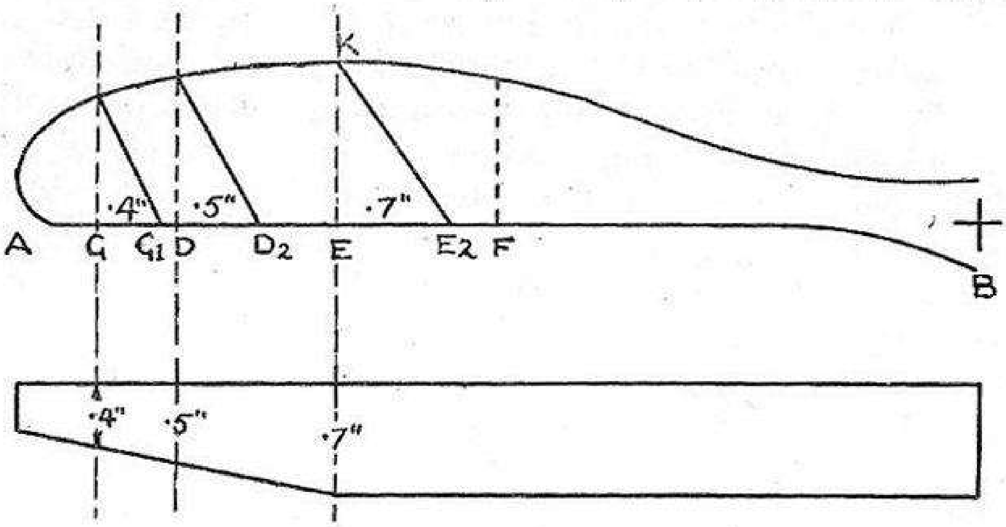

Fig. 121

In preparing the block for any airscrew, a piece of wood should be obtained with measurements slightly larger than those of the proposed propeller. After planing to the *exact* thickness, the ends should be chamfered off at the correct angles. The propeller shape may now be set out on one face of the block, and cut out with a fretsaw. The blank thus obtained should look something like the illustration in Fig. 122, for a symmetrical propeller. These blanks, ready for carving, may be obtained, shaped and chamfered, from the model supply stores.

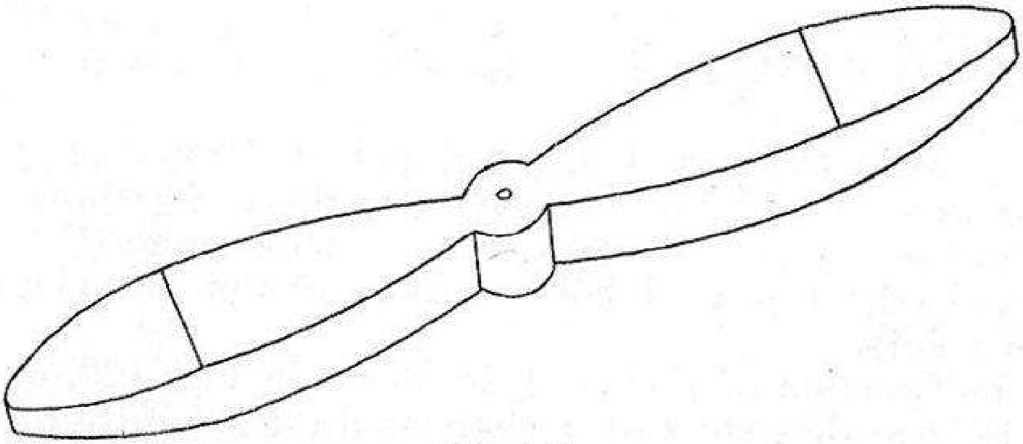

Fig. 122

Having bought or made our propeller blank, the next step is to carve it. This job is much easier than it appears, as the correct shape and pitch develop automatically during the carving.

The first step is to determine the direction in which the propeller shall revolve. This, looking from the front of the aeroplane, is usually in an anti-clockwise direction, and only in special cases need this be departed from. Having decided that this shall be the direction of rotation, we first mark one side of the block "front" and the other "rear," and drill a hole through the exact centre of the block, making sure that it is square with the faces. This is the spindle hole.

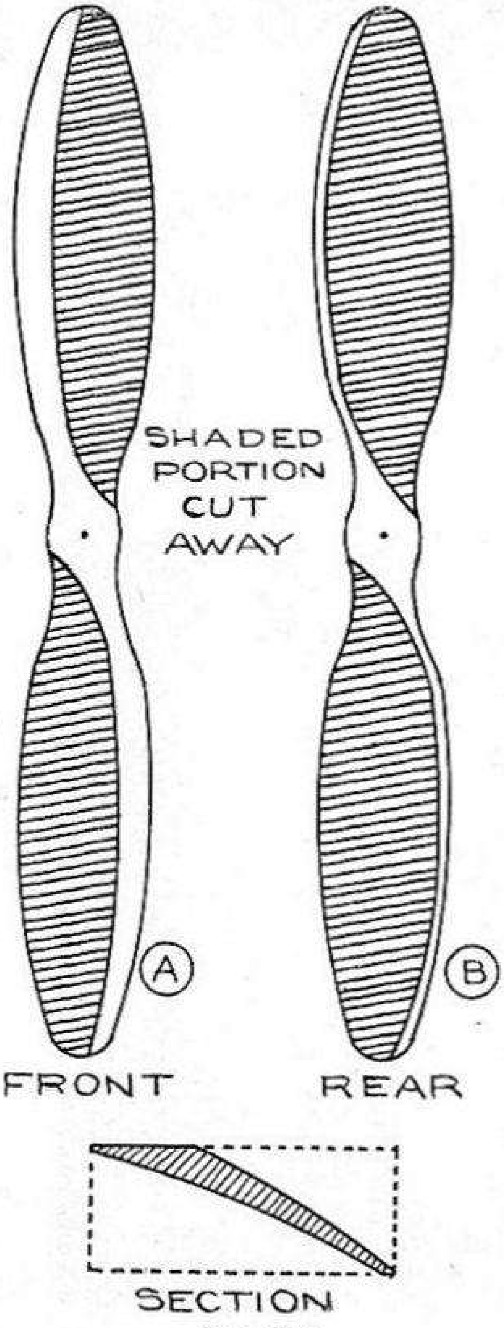

Fig. 123

We must now place the block vertically before us, or lay it upon a table, with the front face uppermost, and one blade pointing directly away from us. We will call this the "top" blade. Along this "top" blade draw a line one-third of the blade width away from the left-hand edge, and, after revolving the blank through 180 degrees, mark the other blade in like manner. This is shown in the drawing marked "A" in Fig. 123. Now turn the blank completely over so that the "rear" side is uppermost, and draw lines down the side of each blade as in "B" in Fig. 123. These lines are 1/16 inch from the edge. By marking in this manner and carving to the lines, the all-important aerofoil section is given to the blade, as is made clear in the small drawing in Fig. 123. The line on the rear side of the blank will prevent cutting to an undesirable knife edge.

The block may now be secured to the bench with a clamp, and the rear side of the propeller roughed out. A spokeshave is probably the best tool for this purpose, as the amount of the cut can be regulated. Some constructors employ a gouge for removing the main body of surplus wood, but, in the hands of a novice, this tool is likely to be too drastic in its action. With a spokeshave there is much less likelihood of accidentally tearing or otherwise mutilating the wood.

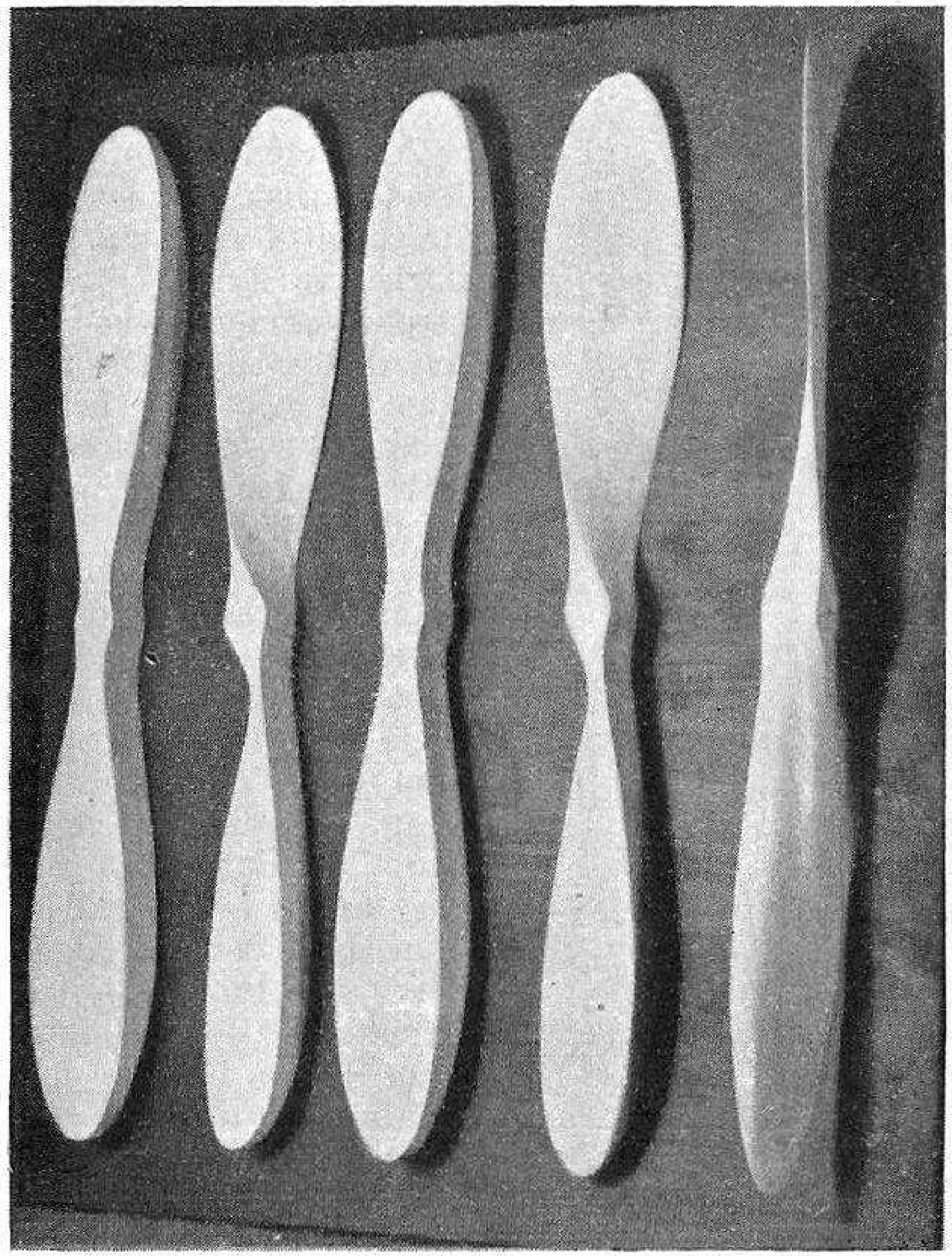

Fig. 124.—Reading left to right: (1) Rear of blank marked out. (2) Rear of blank carved. (3) Front of blank marked out. (4) Front of blank carved. (5) Finished propeller

The rear of the blades of an airscrew, or "working face," i.e. that side which is towards the rear during flight, is usually flat or slightly concave in shape. For slowly revolving propellers this concave or hollow shape should be given, and the tips of the blades may be made very slightly spoon-shaped. It is advantageous to carve and finish the rear sides first; obtaining the concave shape with glass-paper. Ensure that the hollow of each blade is alike, checking this by placing a ruler across the edges of the blade and holding up to the light. When each undersurface is similar, the front of the propeller may be roughed-out, using the spokeshave as before and finishing with glass-paper. If the propeller is carved to the lines on the front face the blades will take a thicker section at a distance of one-third the width from the leading edge. This will give the true aerofoil section to the blades.

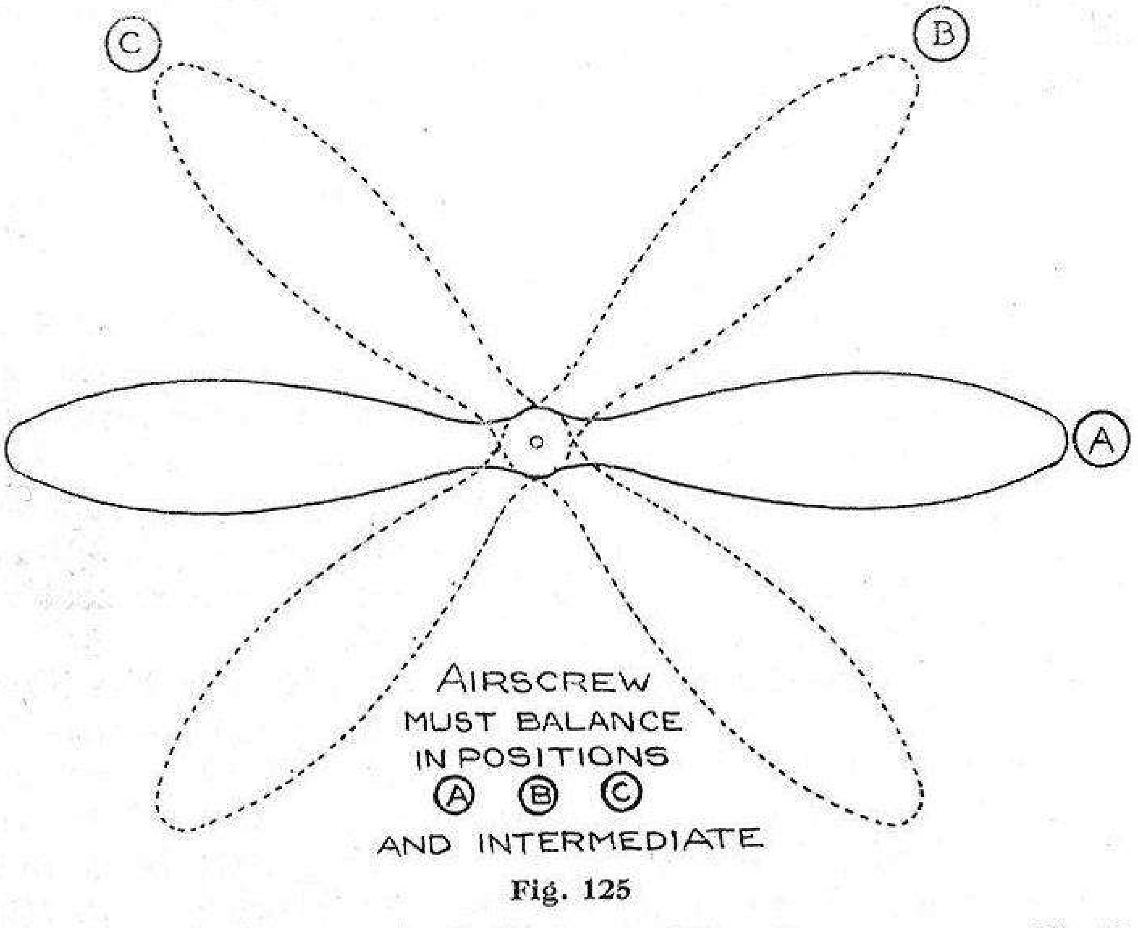

Fig. 125

In addition to a spokeshave, wood-rasp and pocket-knife, a few glass-paper files will be found useful. These are quite simple to make. Strips of glass-paper of various grades are glued to small strips of wood, the glass-paper being stuck to either side, say, coarse on one side and fine on the other. A round file is useful for shaping the propeller boss, and a round glass-paper file may be made by sticking glass-paper to a short length of $\frac{3}{8}$ inch diameter wooden dowel.

When the propeller has been carved and sand-papered to shape, it is necessary, before finishing, to check for balance (see Fig. 125). This is done by swinging the airscrew on a piece of wire passed through the spindle hole. If one blade is heavier than the other it must be glass-papered down until the propeller balances correctly. The actual finishing is done with flour glass-paper ; all rough edges are smoothed off, and the curves blended into the final shape. Any high spots, which may be felt by running the tips of the fingers lightly over the work, must be removed with fine glass-paper, and the propeller finally tested for balance.

For balsa airscrews the spokeshave will not be of much use for roughing out, as the soft wood will clog the blade, and a sharp pocket-knife and the glass-paper files should be sufficient tools. Use fine glass-paper on balsa ; grades 00 to 1 are the most suitable.

While hardwood propellers may be finished with cellulose lacquer, varnish or french polish, balsa airscrews are better left in the plain wood, as the application of paint or varnishes brings up the grain and adds weight.

A very finished appearance may be given to a propeller by fitting a spinner to the boss. This spinner may be glued to the boss after the propeller is made, the centre section being suitably shaped to accommodate it.

Details of a good propeller clutch are given in the illustration of the gearbox in Fig. 113, and the propeller may be removed and replaced almost instantly with this arrangement. Alternatively, the airscrew may be secured to the shaft by simply bending the end of the shaft back and embedding this in the propeller boss, as shown in Fig. 126. Extra duration of glide is sometimes obtained by incorporating a free-wheeling device, whereby the propeller is allowed to turn freely upon its shaft when the power from the rubber motor is expended. This lessens the drag, as the propeller does not tend to wind the rubber motor when the propeller is turned by the airflow. Fig. 127 illustrates a simple free-wheeling device which is constructed of piano wire. The drawing is self-explanatory, but it may be noted that the loop on the propeller shaft is also for use with a geared winder, which will be explained later.

Plain bearings are almost universally used for model

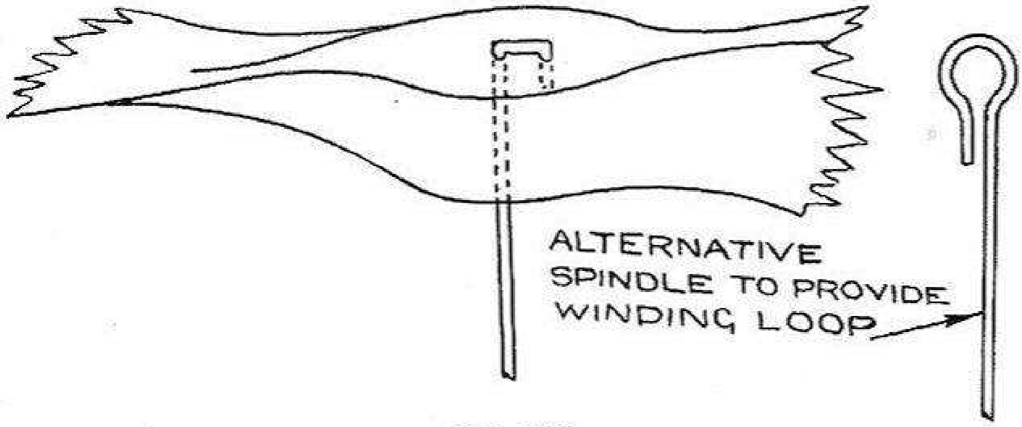

Fig. 126

aeroplane propeller mounting, but, of late, tiny ball-bearing thrust races have been coming into favour. These may be obtained through the usual channels. and users claim that better results accrue. Plain brass bushes, which are obtainable as standard accessories, are the more usual fitment. These bushes are either a push-in fit in a hole in the noseblock or are threaded to enable a nut to secure them.

Most aeromodellists, at some time or another, experiment with three or four-bladed airscrews in the desire to obtain higher efficiency. The results are usually disappointing, and the experimenter returns ultimately to the more orthodox type. Although more thrust may be obtained by using three or four blades, the power absorbed in turning them is greater than for two-bladed propellers.

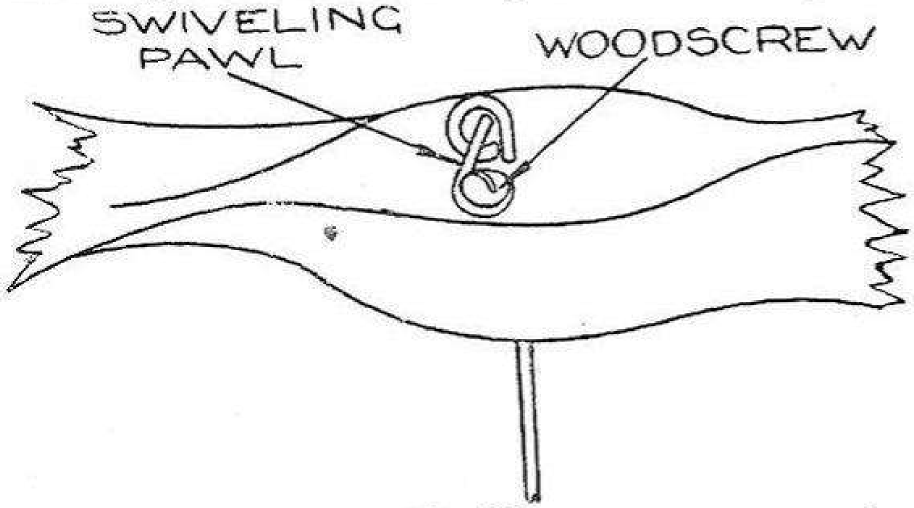

Fig. 127

Considering the additional weight and the difficulty in making them, three or four-bladed propellers do not seem to be worth while. They may be used with advantage, however, when it is essential to keep the airscrew diameter low, as is the case for structural reasons, with certain types of pusher aeroplanes.

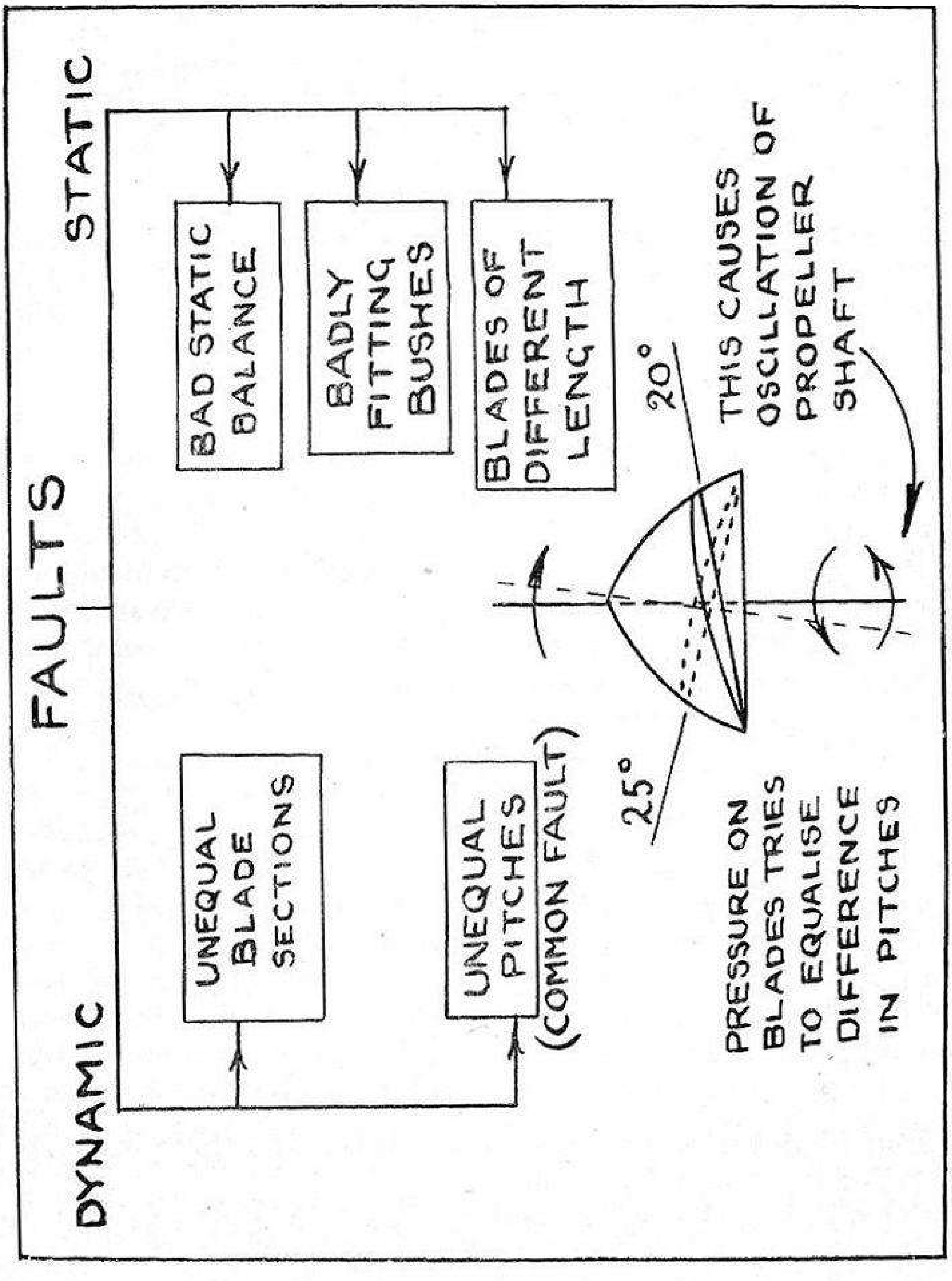
FAULTS
DYNAMIC
STATIC
UNEQUAL BLADE SECTIONS
UNEQUAL PITCHES (COMMON FAULT)
BAD STATIC BALANCE
BADLY FITTING BUSHES
BLADES OF DIFFERENT LENGTH
25°
20°
PRESSURE ON BLADES TRIES TO EQUALISE DIFFERENCE IN PITCHES
THIS CAUSES OSCILLATION OF PROPELLER SHAFT

Fig. 128

CHAPTER XI

FLYING SCALE MODELS

The growing popularity of flying scale aircraft has made them to-day an important branch of model aeronautics. This reason, combined with the fact that their design and construction follow a definite technique, has made it advisable to devote a special chapter to the problems which this class of model aeroplane involves.

It is not proposed to deal with non-flying scale models, as these are not allied, in the usual sense of the term, to model aeronautics, but form a branch of model making along with all non-working models in other spheres. Their problems, therefore, lie in the direction of clever craftsmanship and a painstaking ability to copy, and not in the difficulties which the flying model enthusiast is called upon to face.

Whereas the ordinary duration type of model aeroplane is concerned mainly with flying qualities—with appearance only as a secondary consideration—the non-flying scale model is associated only with appearance. The flying scale model occupies a place between, and in this chapter the term " scale model " will refer only to this type.

Appearance is, obviously, the main object; the flying qualities being relatively unimportant, as it is plain that flight duration cannot be expected to compare with that of models especially designed for that purpose. Although the duration of flight is usually short, it is of a very pleasing nature, and there are few sights to compare with that of a well-trimmed scale model in operation. Furthermore, they make a pleasant change from the stereotyped duration model, where individuality has to be sacrificed upon the altar of efficiency.

Happily there are signs of a great increase in scale model flying in this country after a long neglect, due mainly to the handicaps involved. This movement has spread from the United States, where, it may be safely said, it forms the main branch of the pastime. This interest has been chiefly fostered by the great number of commercial scale model kits available to the public, and although the flying qualities of these machines are usually low, they seem to have had no adverse effect upon the design of the duration class, whose performance is generally excellent. Here again the kindly American weather may have played its part, although it is necessary that the helpful influence of American weather be not exaggerated, as some American machines have performed very convincingly in this country.

Scale models may be divided into three classes as under :—

(*a*) Modified duration type or semi-scale models; incorporating certain full-sized features such as wheel spats, cockpit, cabin windows, etc.

(*b*) Approximate scale models embodying the general features of the full-sized prototype, but modified considerably to give best flying characteristics.

(*c*) True scale models following exactly the features of the prototype, and retaining the ability to fly.

The class under the sub-heading (*a*) comprises a large number of models, all resembling, in their general characteristics, some full-sized machine. Only the minimum of detail is incorporated ; the general lines and lay-out being just sufficient to identify the model with some full-size aeroplane. As a good duration of flight is aimed at, it is necessary that this class of machine be as simple as possible, and therefore these models should not be based upon some complicated or otherwise unsuitable prototype. The examples chosen should be machines noted for good stability, and preferably of large wing area so that the wing-loading may be as light as possible.

The heading (*b*) covers what is probably the most popular class of scale models, as sufficient detail is incorporated to render the making extremely interesting, and the finished model very pleasing to behold, yet sufficient flying performance is retained to make the machine interesting in the field. There is no doubt that this type of aircraft offers more scope for ingenuity than almost any other, and the builder is called upon for the constant exercise of his wits and judgment in reconciling the questions of detail and weight.

True scale models (*c*), whilst forming a most intriguing type, approach more nearly the non-flying models, both in their realistic appearance and curtailed flying qualities. It is safe to say that the closer a model follows its prototype the less may be expected from it in the air. Whilst the ability to fly is retained in greater or lesser degree, only short durations may be looked for from this class of model, therefore its appeal must lie in its appearance and true representation of the prototype. Most of the commercial scale model kits fall under this head, the machines evolved usually having a duration of only a few seconds.

One of the greatest drawbacks to exact scale models is that the unusual amount of detail involved renders the machine delicate and liable to damage ; the necessity for keeping the machine light resulting in a number of fragile features.

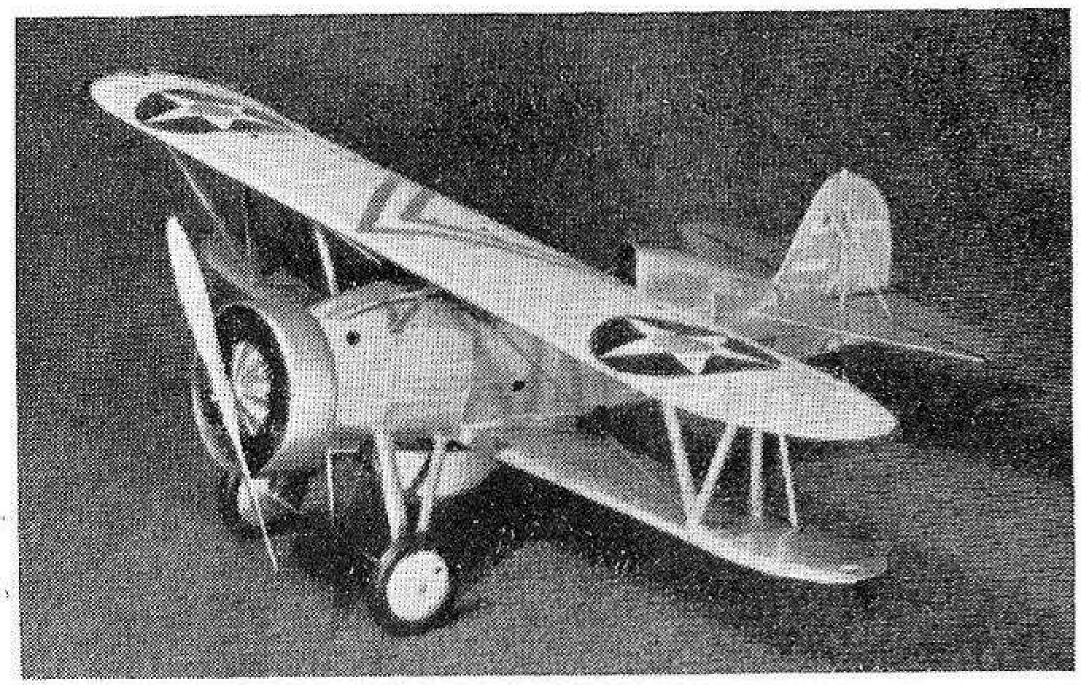

Fig. 129.—"Boeing Fighter." Built from an American sçale-model kit of parts

The difficulties which scale model aeroplanes present centre mainly around the fact that they cannot easily be designed in accordance with the requirements of model flight, and the absence of a pilot, or any controlling influence except automatic stability, makes some modification of full-sized designs almost indispensable. For instance, the design of full-size aircraft does not take into account such happenings as nose dives into the ground, an eventuality to which model aircraft are particularly liable. In the full-size machine, of course, it is the pilot's job to see that a nose dive does not occur, but in the case of the model some feature must be added or modified with a view to making such an event impossible. In addition, no account is taken in "real" aeroplanes of accidental damage due to handling or transport, and no attention at all is paid to that great problem of the aeromodellist—portability.

All the foregoing are of the utmost importance to the scale model, and are complicated by the fragile construction necessary if the weight is to be kept down to reasonable proportions.

The presence of a heavy engine, usually situated in the nose of a full-sized machine, offers difficulties in the way of obtaining a correct centre of gravity in the model, the rubber motor of which has its centre of gravity halfway along its length. This makes some addition of weight to the nose, and a lightening of the rear portion, essential in the scale model.

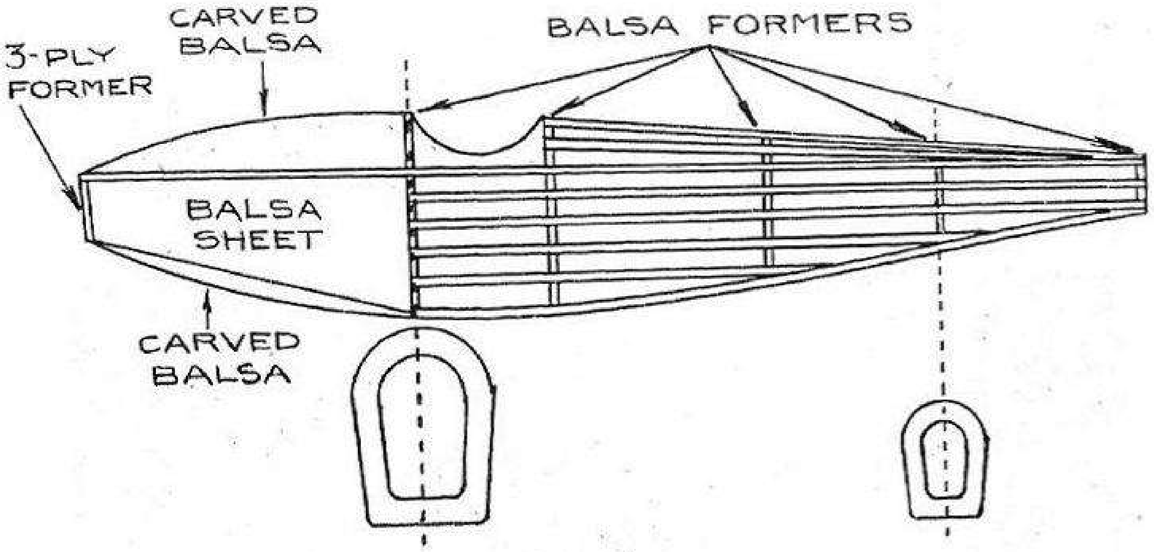

Fig. 130

Dihedral in the wings has to be incorporated in the design to a greater degree than in full-sized machines, again owing to the absence of the controlling influence of the pilot. Many full-sized machines have only a minute dihedral in the wings, and are obviously unsuitable as prototypes without considerable alteration in this direction. Tail planes and rudders must also be made larger, that they may have a greater stabilising effect without outside control.

If it is desired that the model shall make rise-off-ground flights, the undercarriage must be situated nearer to the nose of the machine than in full-sized practice, as any unevenness in the ground will tend to topple the machine over on its nose. Ideal take-off conditions, i.e. a perfectly smooth surface, are seldom met with except in indoor flying. The undercarriage legs must usually be lengthened to provide clearance for a large propeller, as scale size propellers can rarely be used unless the model is extremely light and of good streamlined shape, or is geared up from a rubber motor of heavy type. This latter feature involves the use of a very strong but light fuselage to withstand the compression strains of the elastic. Alternatively, the model builder may be contented with extremely short flights. The increased length of the undercarriage legs renders the model still more liable to turn over in rise-off-ground attempts or on landing on a rough surface. This tendency to overturn makes the use of a strong rudder upright essential, as this is much exposed to damage.

Downthrust or some other form of control is advisable to govern the speed range and high initial thrust of the rubber motor; another point of difference between the scale model and the full-sized aircraft.

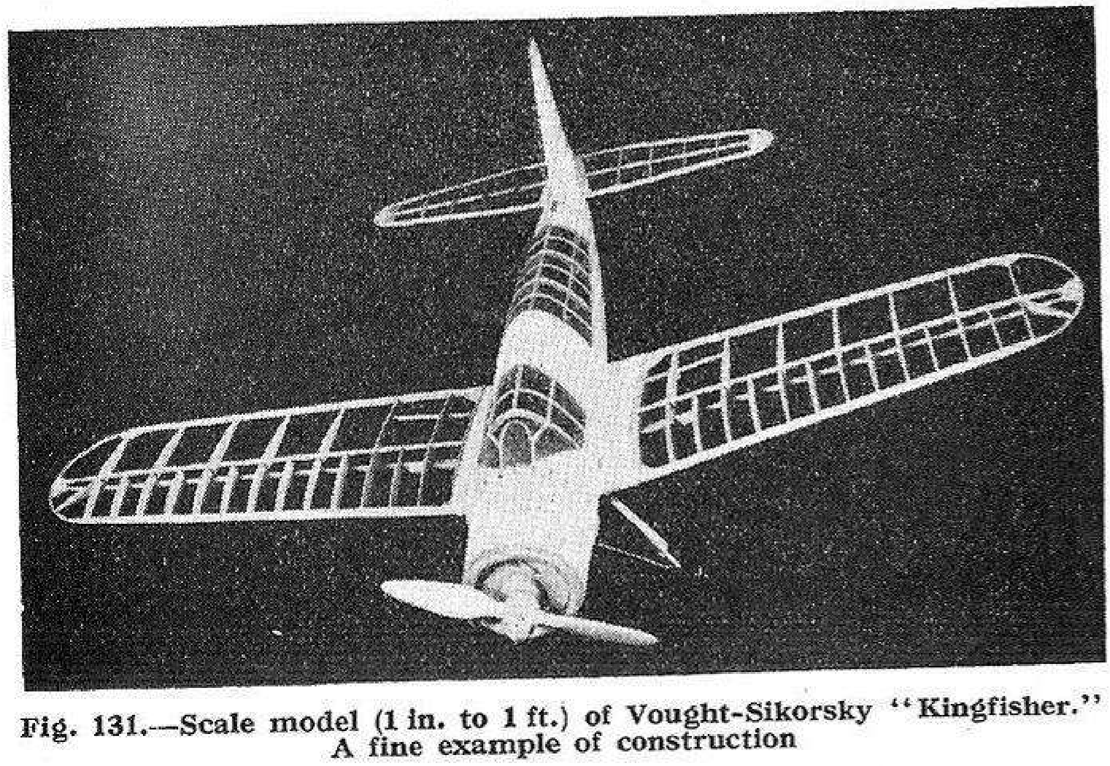

Fig. 131.—Scale model (1 in. to 1 ft.) of Vought-Sikorsky "Kingfisher." A fine example of construction

The types suitable for selection for scale model aeroplanes may be either high- or low-wing monoplanes, or biplanes, but should be, for preference, of the single engine type. Machines with "in-line" motors, that is engines with the cylinders in line, are most suitable if unnecessary addition of weight is to be avoided and a good gliding angle obtained. Air-cooled radial or rotary engines involve a lot of detail work on the portion of the model most liable to damage, and it is extremely annoying, to say the least, to have hours of work spoiled by one unlucky flight. However, models with this type of motor have been successfully flown, and an engine of this character certainly repays the maker for the work expended on it from an appearance point of view. Fortunately, owing to the increasing use of streamlined cowlings, it has, in many cases, become simpler to copy radial or rotary engines, as only simple details need be incorporated to give a most realistic appearance.

An absolute duplication of full-size structure cannot be attempted, and methods of construction must be employed which give the maximum strength for as little weight as possible. For models up to 36 inches span this condition is met by the use of balsa wood ; models with a greater span usually embodying a mixed construction of hard woods and balsa, if excessive liability to damage is to be guarded against and flying in all reasonable weather is required.

Fuselages are best built on a rectangular, four longeron, strut-former basis, and any subsequent shape such as oval, or "half-round-top" built on afterwards. This building up on a simple initial framework simplifies the task of getting the fuselage accurate.

Circular fuselages may be built on circular formers cut from balsa sheet, with several light stringers. It is often advantageous to make the rear portion of the fuselage in this manner, and to carve the front portion from solid balsa, which is hollowed out where possible. This method of construction has several advantages :—

(*a*) Appearance (carved portion may easily be made to represent cowlings, etc.).

(*b*) Strength.

(*c*) The weight of the carved-out balsa front is slightly greater than that of the longeron and former rear portion, and adds weight in the correct position for scale centre of gravity.

(*d*) If movable wings are used these may be affixed to the solid balsa portion of the fuselage, and damage is not

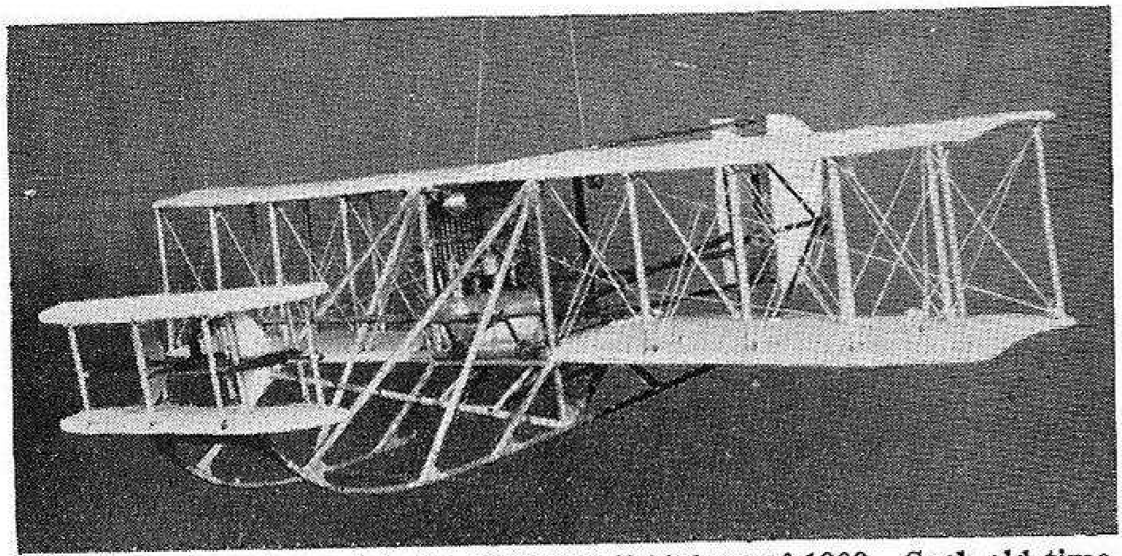

Fig. 132.—A scale model of a "Wright" biplane of 1909. Such old-time aeroplanes make interesting scale models

done to the tissue covering in the event of a crash.

(*e*) Aluminium sheet can be fixed conveniently to the nose portion on a fairly solid base.

If an extremely solid construction is required, balsa sheet of 1/64th inch or 1/32nd inch thickness may be used for sides and top, with a carved balsa nose as before. This combination is immensely strong and will withstand an amazing amount of knocking about without damage.

For large models, birch or spruce may be employed in the conventional manner. This type of construction applies particularly to petrol-engined aircraft. but large rubber-driven models employing geared motors may be made successfully on this principle. It is well to remember that if an even number of rubber skeins is used the fuselage need only be designed to withstand compression strains, but if three or any other uneven number of skeins is employed, some precautions against rubber torque must be taken.

Owing to the restricted length of scale model fuselages, it is not generally possible to get maximum duration with only one skein of rubber, and two or more gears are essential. These give an added advantage by placing useful weight in the nose of the model. To this end also, it may be necessary to terminate the rubber skeins before the extreme end of the fuselage is reached, thus helping to bring the centre of gravity position forward. However, the skein length may be one and three-quarter times the distance between the front and rear hooks when both are in position.

Whilst on the subject of rubber motors it may be pointed out that care should be taken not to be too liberal in the use of rubber lubricant. A mysterious loss of performance may often be traced to this cause, as the excess lubricant is flung off on to the covering and longerons. If these latter are of balsa they will absorb an amazing amount of rubber lubricant, which not only adds considerably to the weight of the machine, but causes warping and ultimate rotting and collapse.

The actual power required to fly a scale model can only be determined by actual test flights, as the speed and the drag are impossible to gauge accurately. The number of turns given to the propeller will, of course, depend on the length and amount of rubber used.

The advent of the small petrol engine into model aeronautics opens up great possibilities for the scale model, as it offers a constant output power unit with good power-weight ratio. Also, the correct position of the centre of gravity is automatically obtained, and an exact scale distribution of weight may be attempted.

In petrol-engined models extreme simplicity should be aimed at, machines with good, clean lines being best suited to the problems involved. Small engines may be run—usually without much alteration—in an inverted position, and this facilitates the copying of certain full-sized aeroplanes. The small engines of from one to five c.c. should be highly suitable, but the use of larger engines would involve a large model which would be unwieldy for transport except by motor car. The opinion has been expressed in authoritative quarters that the one true and useful field for the model aero-engine lies in *scale model aircraft*.

Single engine tractor aeroplanes are easily copied if a miniature petrol engine is used, but it is not impossible that two such motors be employed to drive propellers revolving in opposite directions, thus neutralising torque.

Wings for scale models up to 36 inches span should be constructed of balsa, preferably with thin section front spars of birch or spruce to avoid breakage due to collisions. These heavier front spars also help to bring the centre of gravity of the machine more forward. Tissue paper, doped in the usual manner, makes the best covering for machines of moderate size. Biplane wings should be made separately, doped, and dried on a flat surface to avoid warp, the struts being cemented in afterwards. It is very advantageous to assemble biplane wings, both top and bottom, into one rigid unit, which may be moved along the fuselage as the " trim " may require. By this method the wings are less liable to damage than they would be were they fixed rigidly to the fuselage as is the case with the bulk of American machines.

Strengthening pieces should be added where the interplane struts are fixed to the wings, and where the wing spars meet the fuselage. If ailerons are employed they should be built into the wing, covered at the same time, and the covering cut afterwards.

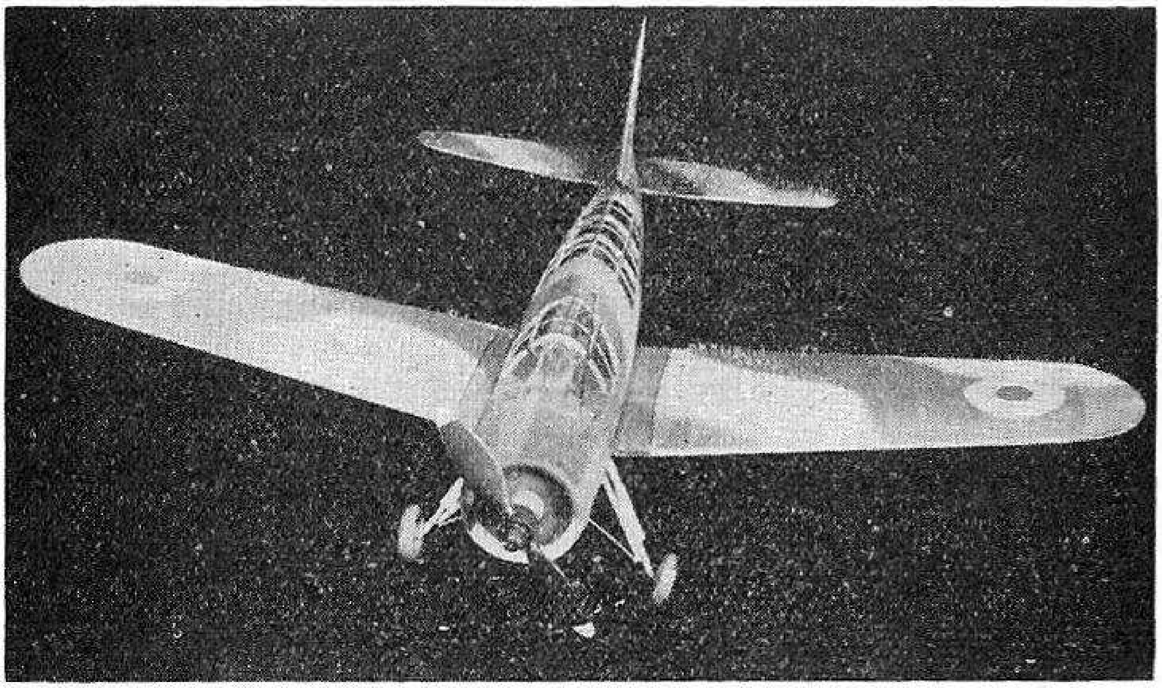

Fig. 133.—The Vought-Sikorsky "Kingfisher" completed

The foregoing remarks are intended to indicate a method of approach to this most fascinating branch of model aeronautics, in the successful pursuit of which individuality and enterprise must ever play the most prominent parts.

CHAPTER XII

MODEL GLIDERS

For some years prior to the war, full-sized gliders enjoyed great popularity, and model aeronauts were quick to follow this lead. To-day, model gliding is one of the most popular branches of model aeronautics, and has a fascination which is all its own. This resurrection of the glider, both large and small, is well deserved, for gliders have contributed more to the science of aeronautics than has any other contrivance. Among the great names which stand out from the host of aerial pioneers, those of the glider experimenters, Otto Lilienthal, the German, Octave Chanute, the American, and Percy S. Pilcher, the Englishman, assume high places, and many of their findings have a place in aeronautics to-day. The great Wright brothers themselves devoted many years to glider experiments, and it was undoubtedly the experience thus gained in controlling gliders in the air which, later, enabled them to pilot the first power-driven aeroplane successfully.

Be this as it may, there is little doubt that the model glider presents one of the most interesting aspects of model flying, and a well designed and built glider is capable of giving flights equal both in duration and interest to those of the powered aeroplane.

The " Twenty Minute Glider " described in Chapter XVII contains in its design most of the good features which this type of model should incorporate. Nevertheless, it may be of help to give some general principles of design and management, so that readers may be somewhat prepared to design machines for themselves.

In spite of the changes wrought by the war, model glider competitions are still usually governed by the rulings of the F.A.I. (French Aeronautical Institute), which is still recognised as the governing body in world aviation. These simple rules lay down that model gliders for competition purposes may have a wing span of not less than three feet, and not more than eleven feet, with a wing loading of not less than 4.92 ounces per square foot of wing area. In addition, the area of the tail plane must not exceed the somewhat curious figure of 33 per cent. (not 33 1/3 per cent.) of the main lifting surfaces. The fuselage formula which must be used in the design states that the greatest cross-sectional area of the fuselage must not be less than the overall length of the machine, squared, and divided by 200. That is :—

$$\frac{\text{Length}^2}{200}$$ All measurements in inches.

Within these limits almost any type of glider might be

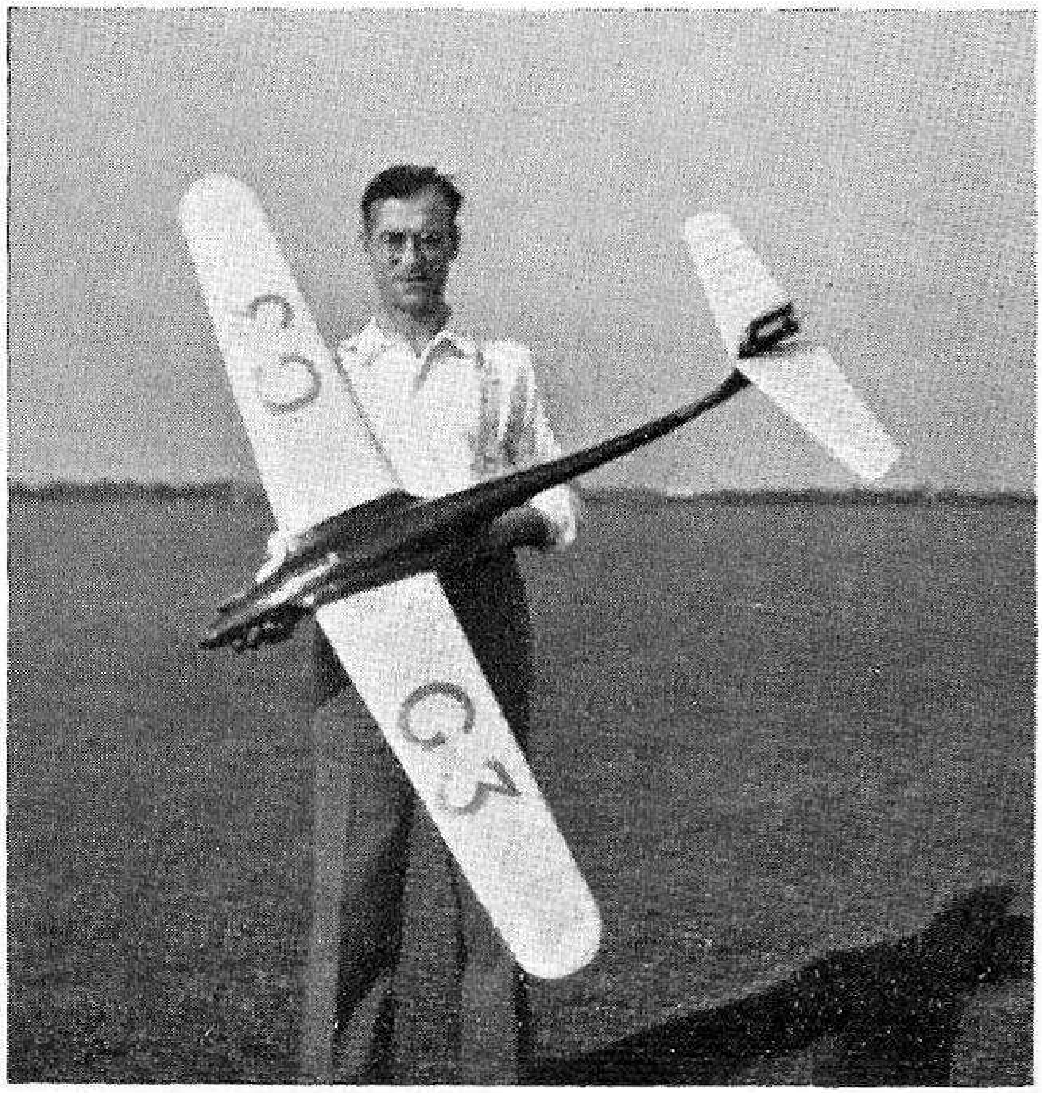

Fig. 134.—Glider built by Mr. A. S. Cox, N.H.M.F.C., which helped Great Britain into second place in the King Peter International Glider Contest. Held by a friend.

included, which accounts for the wide variation which might, before the war, be seen at any model glider meet, both at home and on the Continent. In particular, the International Competition, held biannually, for the King Peter of Yugoslavia Cup, showed as many ideas as there were competitors. The Continental machines mostly ran to the large sizes, with the ten-and eleven-footers predominant. This was an effect of the Continental practice of flying the machines under hillside conditions ; that is, in the hilly and even mountainous country which so many of the nations possessed. Such terrain produces strong updraughts and thermal air currents which are ideal for the large sail planes ; on the other hand, the light thermals which are the rule over the English undulating country, suit better the smaller gliders. It may be taken as a maxim that large gliders do better in strong winds and hilly country, while flat country and light winds favour the smaller machines.

A great deal of variation is permissible in the wing loadings, and, what is really remarkable, both the light and heavy loadings perform equally well. English builders seem to favour the light loadings around five ounces, but there are signs that the large machines with much heavier loadings are gaining favour. Another type of glider much favoured in this country is the *large* glider with a light wing loading. All this latitude in design and specification, however, does not mean that any old " hook-up " will make a good glider. Quite the contrary is the case, and the designing of gliders is a highly specialised branch of the pastime.

Speaking generally, the neat, shoulder-wing type of model seems to be the ideal. Low-wing machines do not seem suitable ; in fact, the tendency is to place the wing very high, as in the parasol and gull-wing types. Although very stable machines may be attained with the parasol arrangement, there is a danger that that arch enemy of gliders, parasitic drag, may be encouraged by the somewhat complicated wing-fixing arrangement which parasol mounting involves. On the other hand, shoulder-wings may be very neatly and efficiently blended into the body by means of balsa fairings.

This attention to streamlining is of the utmost importance in model gliders. Not only must the body be a good streamlined shape, but special attention is required to ensure the neat fixing of the wing and tail unit to the fuselage. In addition, all the surfaces should be as smooth as possible; they should, in fact, be polished. With the larger gliders it is customary to finish the machine in cellulose lacquer, and to rub this to a fine finish with metal polish.

It is not intended to enter here the mathematical side of the question, but only to present some main features of design. Foremost among these is the need for a wing of high aspect ratio. Aspect ratios of between 12 to 15 to 1 should be used, and even higher; in fact, a figure of 20 to 1 is advantageous. At the same time, these extremely high aspect ratios, because they necessitate the use of narrow chords, should only be used with the larger machines. The reason for this is that wings of less than 3 inches in chord are aerodynamically inefficient, and the aspect ratios of around 20 to 1, on the smaller gliders must, of necessity, restrict the chord of the wing to below this figure.

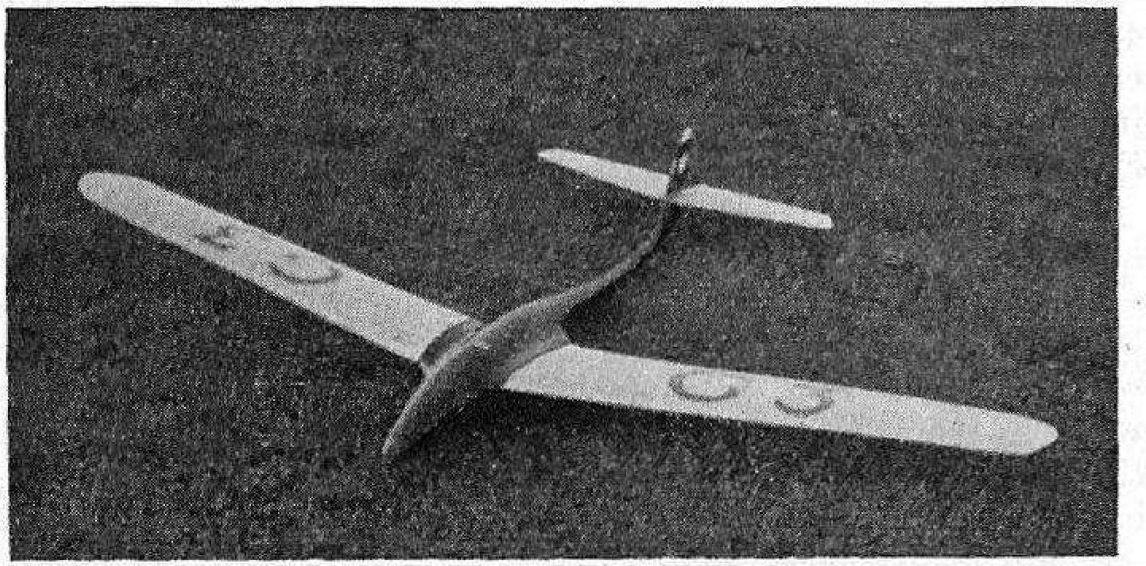

Fig. 135.—" G 3 " on the ground. This picture shows the typical lines of the modern, high-performance glider

Wings tapering in both plan form and thickness should be used, with round or elliptical tips, and it is, perhaps, preferable to taper the wing on the trailing edge only. Wings of such large span are by no means easy to construct so that they will remain rigid and true, and a very sturdy structure is required. Fortunately, the high loadings which are permissible somewhat simplify the matter. With gliders all the weight may be used structurally, as there is no propeller or motor to commandeer the precious ounces.

Gliders, in common with other model aircraft, are very apt to land in awkward and dangerous places, and to collide with trees, fences and houses when on the wing. For this reason, some form of wing fixing is wanted, such as the plug and socket method, whereby the wings may be knocked off the machine in the event of an accident. Glider wing-fixing arrangements are, however, further complicated by the need for a firm fixing which will not pull out under the strain of tow-line launching. A good many model gliders have suffered from this calamity, and it is by no means uncommon for the wings to be pulled completely from the fuselage by an extra heavy jerk on the towline. As the glider is often some fifty feet or more in the air, the results need not be detailed.

High-lift wing sections, such as those presented by the Gottengen range, should be used ; while the beautiful Eiffel 400 is to be recommended. These deep sections, moreover, enable a main spar, or spars, of considerable depth to be incorporated, with beneficial results to the strength and rigidity of the wing.

Glider wings for the machines of the shoulder-wing or high-wing type need no excessive dihedral angle, one of about 5 degrees being sufficient. This is for the ordinary type of wing, wherein the dihedral is incorporated from root to tip. There is in favour, however, a type of wing wherein the dihedral angle is incorporated only in the tips, the main part of the wing being flat. Although the appearance is somewhat against them, this class of wing is extremely efficient, and many good sailplanes have been constructed on these lines.

A good fuselage length may be taken to be about 55 per cent. of the wing span. Besides being of good streamlined shape, the tail end of the fuselage should taper to rather thin proportions. The cross-sectional area, at the point of greatest area, will, of course, conform to the fuselage formula as already given. Construction may follow any of the usual methods, but a multi-stringer construction, using shaped formers, is extremely suitable for the machines of medium size. Bodies for the larger and heavier machines may be made on the monocoque system, or even carved from solid balsa. In this case it is usual to carve and hollow each half of the fuselage separately, and to glue them together afterwards.

The lifting type of tail plane is seldom used on model gliders, and one of symmetrical section is usually incorporated. A section such as the R.A.F. 30 is very suitable, although this section may be modified so that it is thinner than the standard. The high-lift wing sections, such as the Gottengen, owing to the readiness with which the centre of pressure moves with a change of the angle of attack, make it necessary that a somewhat large tail area be used, so that the machine responds instantly to the stabilising influence of the tail surfaces. An area of from 25 per cent. to 33 per cent. of that of the main wing should be used; machines with a long moment arm requiring the lesser amount. Unlike rubber or other powered machines, a dihedral angle may be usefully incorporated in the tail plane, and this angle may be of about the same amount as that given to the wings.

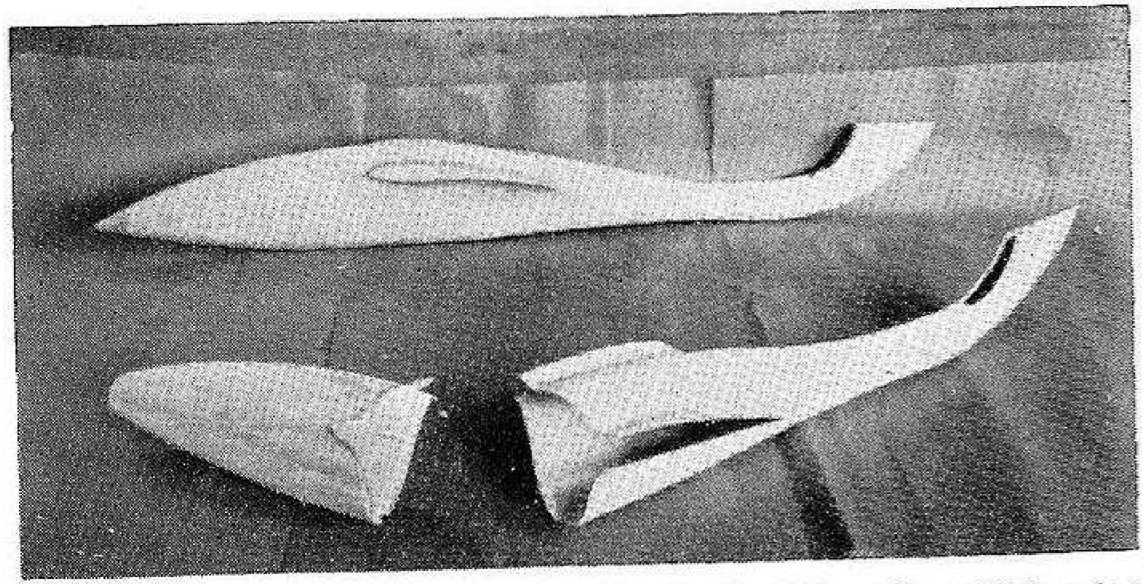

Fig. 136.—The monocoque fuselage of Mr. Cox's glider, after withdrawing from the building jig

The air which leaves the trailing edge of the wings of any aeroplane or glider in flight has a pronounced downward flow and eventually resolves itself into two vortices, which revolve in opposite directions along the sides of the fuselage. The efficiency of the tail and fin is much lessened by this turbulent mass of air, and, in an endeavour to lessen these effects, it is desirable that the tail plane be placed as high as possible. Some designers advocate that the tail plane be placed on the top of the fin, using this as a tail mounting. While, no doubt, this arrangement is aerodynamically good, there exists considerable structural problems, in so far as it is difficult to build a fin of sufficiently thin section which is strong enough to support the tail in a rigid manner. Furthermore, a good margin of strength must also be available to cope with accidents. A seemingly easy way out of the difficulty is to brace the tail plane with struts, from the underside of the tail to the bottom of the fuselage, but struts contribute a considerable amount of unwanted drag, and most good builders avoid them. A good compromise is afforded by fixing the tail about a third of the height of the fin above the fuselage. The arrangement usually comprises a sturdy mounting, which becomes part of the fin, and upon which the tailplane is placed. The remaining two-thirds of the fin is then attached by some socket and dowel device.

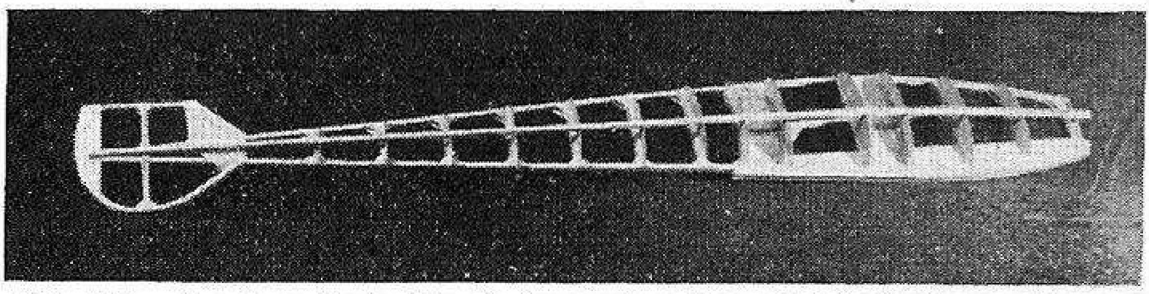

Fig. 137.—Novel method of fuselage construction suitable for large gliders. A flat "outline" of the fuselage is first built of ¼ in. × ¼ in. birch strip, and half-formers are cemented on, as shown. Similar half-formers are then glued to the other side, and the construction completed with stringers

Fin areas may be about half that of the tailplane, and should not exceed this amount, but may err, if at all, on the lesser side.

Launching

Apart from the simple hand launch, usually attempted from the side of a hill, there are several good methods of getting your glider into the air. All of these employ a towline of stout thread or thin twine. For machines up to about one pound in weight, "macramé thread," which may be obtained from art needlework shops, is very suitable. It is light and extremely strong. Models above this weight require thin twine. The weight of twine becomes a serious matter when one may have anything from 100 to 650 feet in play, and for this reason there is nothing lighter and stronger than fishing line of the medium-weight type. It is, however, rather expensive in the quantities which we require. Competition rulings allow a length of between 100 to 655 feet.

To the end of the line a small metal or bone ring is attached, and this is slipped over the launching hook with which all gliders are fitted. It is also usual to attach a small streamer of silk to the line at a distance of a few feet from the ring. This serves to indicate the direction of the wind, and to locate the end of the line upon the ground when the machine is free.

The simplest use of the line is made by the "running launch." In this method, the glider is held by an assistant at the extremity of the line. The operator then runs into the wind, pulling the glider after him. In this manner the glider is made to rise, in exactly the same way as in launching a kite.

Winch Launch

The standard competition method of launching a glider is by means of a towline and winch. A suitable winch may be made from a cheap, geared, hand-operated grindstone, such as may be purchased from most ironmongers or tool stores. The necessary conversion is very simple, as it consists only in replacing the grinding wheel by a plywood drum of about 9 inches in diameter, and clamping a wooden handle into the thumbscrew attachment normally used to clamp the grinder to the bench. This handle may, if desired, be replaced by a length of broomstick, which forms a leg upon which the winder is supported. The arrangement is shown in Fig. 138.

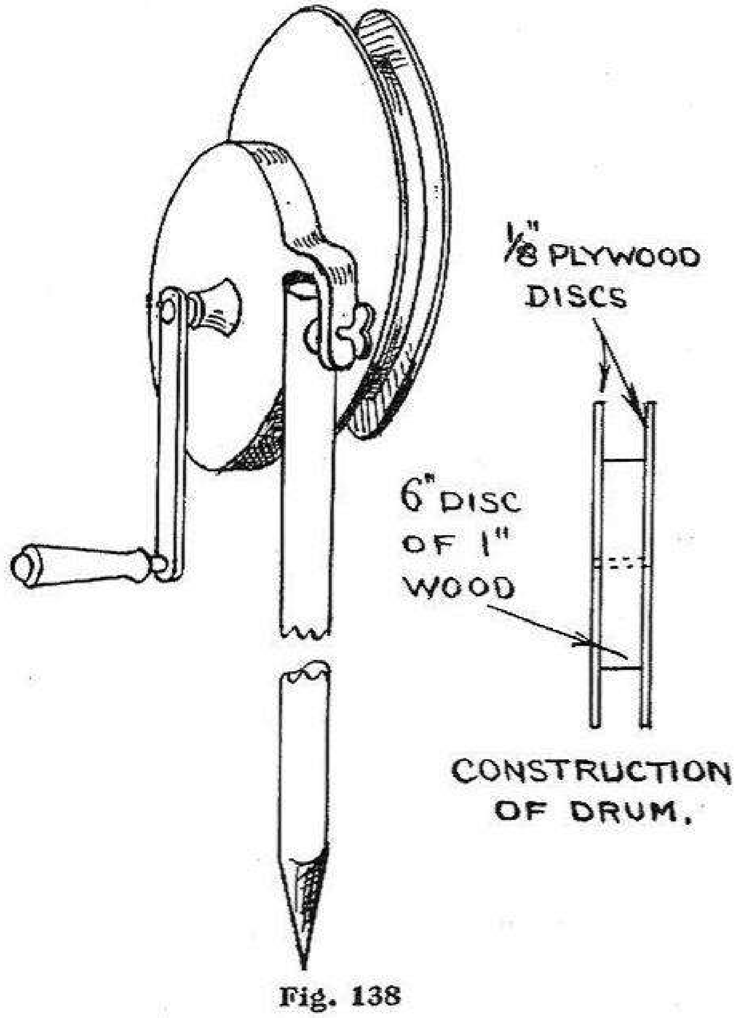

Fig. 138

Proceeding in the same way as before, the assistant carries the glider to the extreme end of the towline (in this case 655 feet is the maximum allowable length), walking away from the operator in the direction of the wind. The operator then tightens the line, and at a given signal the assistant releases the machine. A quick wind-in will cause the glider to soar into the wind, and, when a reasonable height has been gained, the rate of wind-in may be lessened, and the machine "played" to attain altitude. The object is to obtain height with as little loss of line as is possible, until the glider is overhead. At this point, the ring should slip from the towing hook, and the machine commence its glide. The rules of competition do not allow the operator to move out of a circle of 6 feet in diameter while launching is taking place ; thus, all the operations must be carried out by means of the winch alone, aided by a very limited movement of the operator.

Catapult Launch

This is one of the best of methods for single-handed operation, and good altitudes may be attained. The British Glider Record, held by "The Twenty Minute Glider" described in this book, was achieved with this type of launching. Once again a towline is used. This is made up of 75 feet of twine and 25 feet (unstretched) of $\frac{1}{8}$ inch or 3/16 inch strip elastic. The end of the elastic is attached to a peg driven into the ground. After attaching the glider to the line, the operator walks, with the wind, away from the peg, until the elastic is stretched some 50 feet or so. On releasing the machine, the pull of the elastic will cause the glider to soar. In this case also the ring automatically slips from the hook when the glider is vertically above the point where the elastic is anchored.

Pulley Launching

The launching of gliders by means of a towline and a system of pulleys is well known, and has several advantages to recommend it. Various arrangements are used, and in all of these it is possible to propel the craft at speeds greater than that at which the operator moves upon the ground.

The simplest method is shown in Fig. 139, where it will be seen that the end of the line is attached to a peg driven into the ground. The line is then passed through a pulley held by the operator, and from thence to the machine. Upon walking backwards the operator will pull the machine towards him at twice the speed at which he himself is proceeding.

Figure 140 depicts a variation of this method, and it will be noted that the end of the line is again secured to a stake. From this, the line proceeds to a pulley attached to a handle which the operator holds, and from thence back to another pulley which is fixed to the upper part of the stake, and, finally, to the glider. It will be appreciated that when the operator moves from the stake the glider will be pulled forward. It will thus soar into the air, especially as it will have been arranged so that the direction of launch is into the wind. In this case, the speed of the machine is three times that of the operator, and it is possible for this system to be used for solo launching.

Mr. C. A. Rippon, in conjunction with Mr. S. Collins, has experimented a great deal with pulley launching, and they have, between them, done much to perfect the system shown in Fig. 141. Three pulleys are used. and the speed of the machine is four times that of the operator. This gives a great deal of control over the launch, and the method is, in fact, one of the best yet devised.

Figure 141 shows that from the stake the line is carried to the lower pulley of a pair, affixed to a suitable handle.

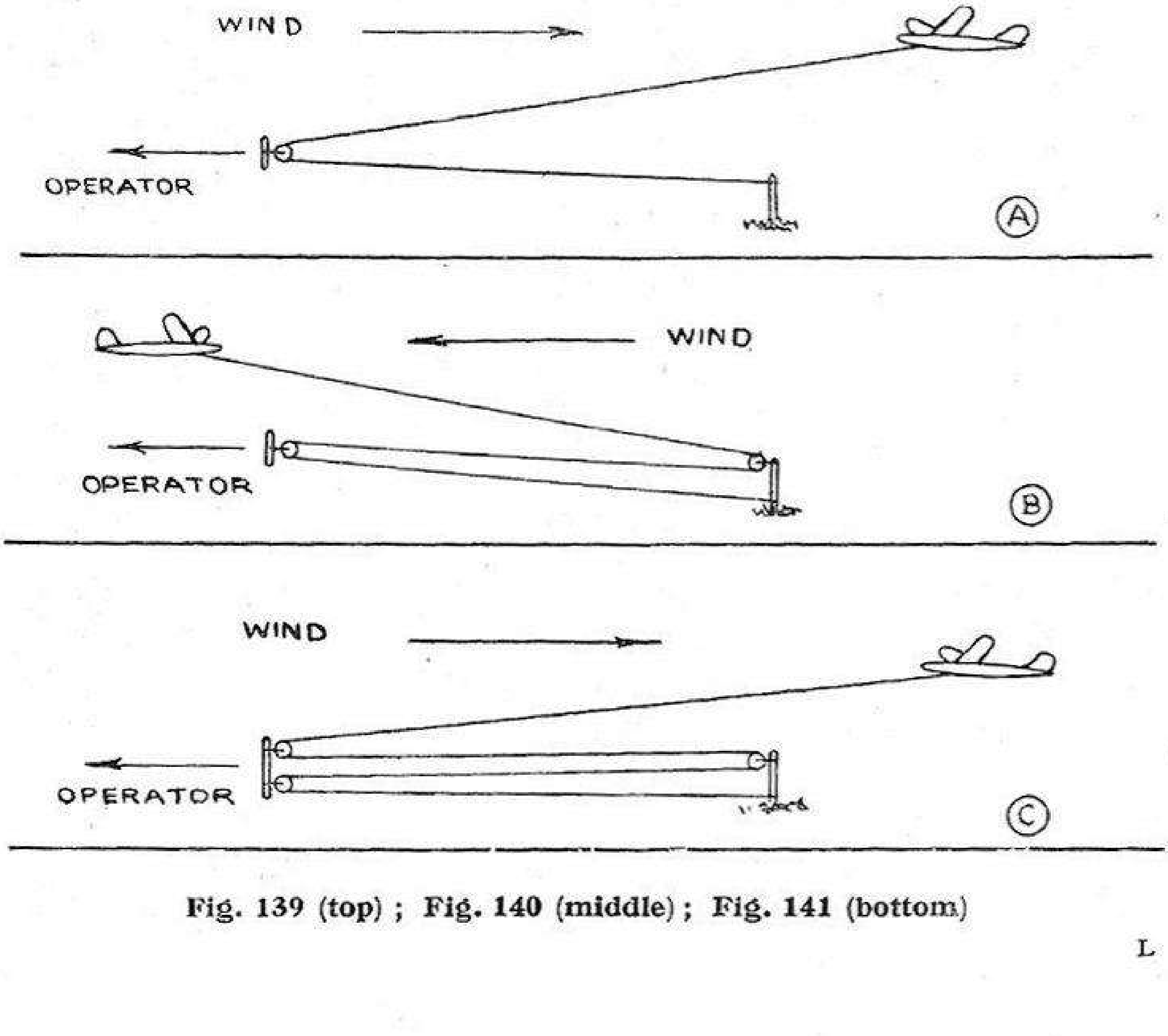

Fig. 139 (top) ; Fig. 140 (middle) ; Fig. 141 (bottom)

Passing over this pulley, the line returns to the stake, where it again engages a pulley, and then proceeds to the upper pulley on the handle. From thence it is carried, in the usual manner, to the glider.

It will be realised that the operator may move but slowly, which is an advantage when rough field land has to be negotiated. In addition, the operator may have the machine fully in view during the launch, and it is here that the advantage of the slow movement is apparent, in so far as one's eyes must not be continually withdrawn from the machine to avoid any pitfalls of the path.

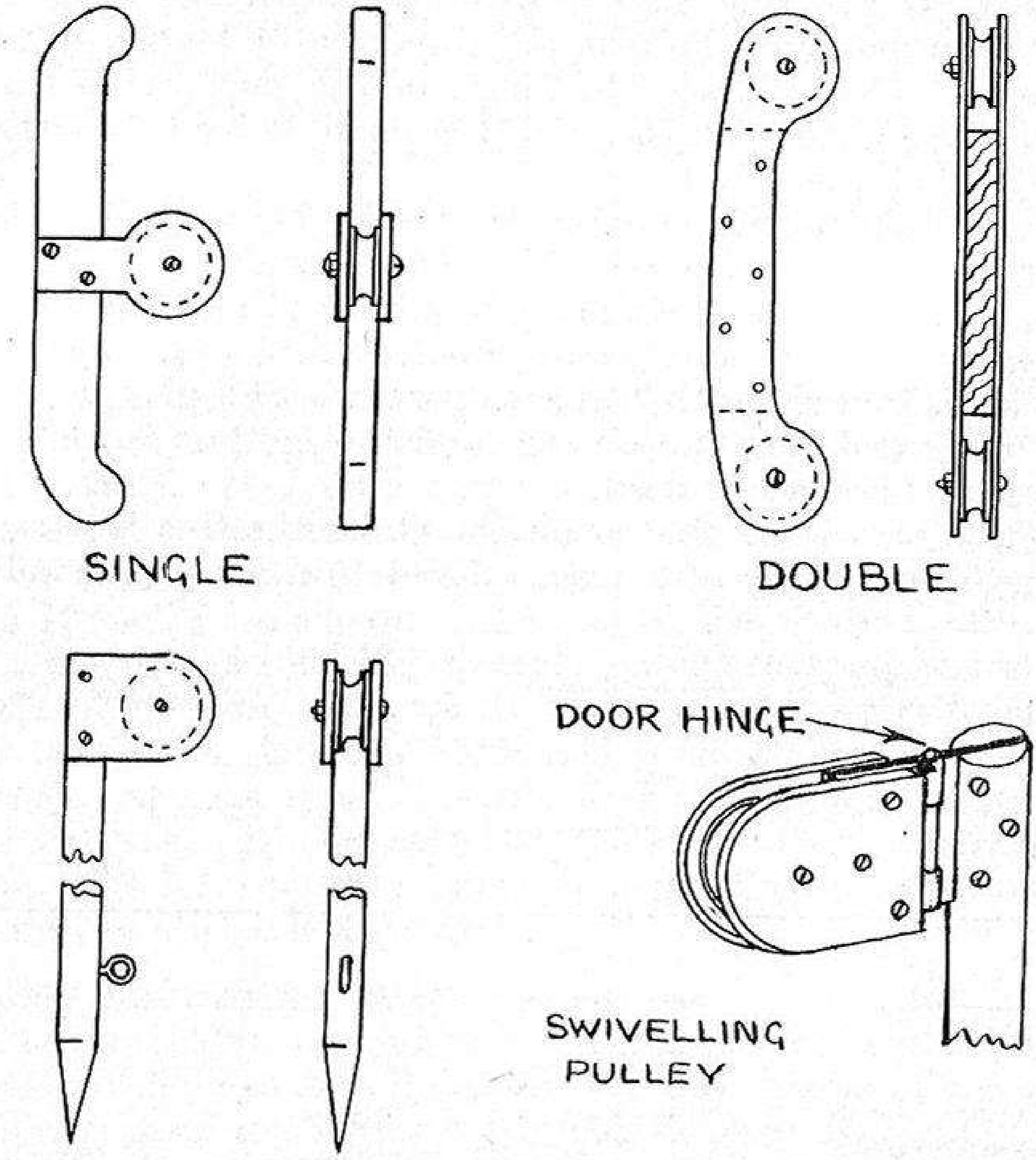

Fig. 142

Launching Apparatus

With the exception, perhaps, of the pulleys, the whole of the apparatus required for pulley launching is essentially a home-made job. Suitable pulleys, turned from aluminium, may be obtained from some model supply shops. In default of this, they may be turned from hardwood, or may even be cut, in the form of plywood discs, with a suitable washer-cutter. Very suitable pulleys indeed may be often obtained, second-hand, from jobbing builders. They come from old venetian blinds, and are the small pulleys over which the blind cord runs.

The details of the arrangement are not important, and may be left to the maker's fancy. At the same time, those interested will find a suggestion or two in Fig. 142. It is an advantage to have wooden pulleys bushed with brass tubing, as it is essential that they run as easily as possible upon their bearings.

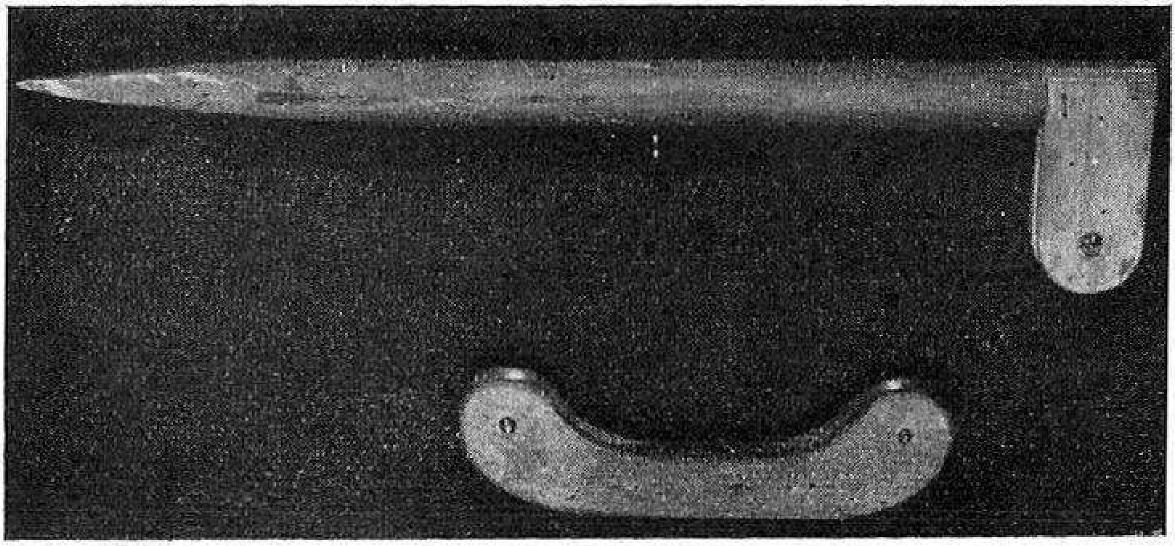

Fig. 143.—The original launching apparatus used by Mr. Rippon and Mr. Collins

Some advantage is obtained by having the pulley to swivel upon the stake, as this does much to prevent the line from running off. It also enables the operator to change his direction of pull while the machine is being launched. In this way the machine may be "weaved" about to accommodate it to any slight changes in the direction of the breeze.

CHAPTER XIII

HINTS and TIPS

Some of the following hints are well known, but others are the outcome of many years of personal experience. They are given in the hope that they will assist the beginner and possibly refresh the memory of the experienced builder.

Being extremely soft, balsa is not readily cut with a saw, as the saw teeth become clogged, and there is a tendency for the saw to " run off." Large blocks are, however, difficult to cut by any other means, and must usually be sawn roughly to size, and finally shaped with a sharp knife and glass-paper. Balsa sheet is easily cut with a safety razor blade ; the blade being drawn several times lightly along the cut. When double-edged safety razor blades are used, a small guard may be made from a piece of bent tin, and secured with small nuts and bolts. This will prevent cut fingers.

It is often a problem to make small circular holes in balsa sheet. These are sometimes required for lightening purposes, and may be cut quite easily with a piece of brass tubing. The tube should be bevelled on the *inner* edge, with a file or countersink bit, to a cutting edge. (Fig. 144.) For very small holes a cheap tin pencil case may be used in a similar manner.

Thin sheet balsa, usually of 1/64th inch thickness, is often used for fairings, cowlings, etc. This thin sheet may be curled to the desired curve by coating one side with cellulose cement, and allowing this to set. As the cement dries it will contract and curve the wood in so doing.

Balsa is considerably strengthened and toughened by soaking in dope or cellulose cement.

Balsa tubes for struts and undercarriage legs may be made by soaking thin sheet balsa in water and allowing to dry whilst bent around a round wooden dowel. They should be bound with tape, which is removed when dry, when the edges of the tube may be secured with cement.

A piece of glass forms an ideal scraper for balsa or other woods. It is particularly useful for scraping bamboo.

When sheet balsa has been used for fuselage covering it is often difficult to obtain a smooth finish owing to the rough grain which does not sand-paper very smoothly. Tissue paper doped on to the balsa will give a smooth surface upon which colours or insignia may be painted.

Wheel discs may be cut from balsa sheet or plywood with the simple tool illustrated in Fig. 145. This consists of a small piece of hardwood into which two panel pins have been driven at the required distance. The tool is used like a compass ; one pin forming a pivot, the other being sharpened to a cutting edge.

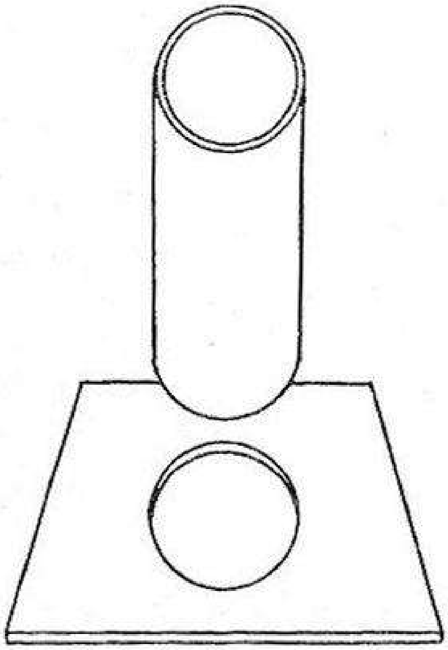

Fig. 144

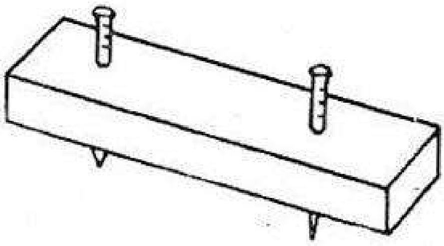

Fig. 145

Bentwood propellers of sheet balsa or other woods can be made by coating the wood on both surfaces with varnish which is allowed to set. The wood is then warmed, twisted and immediately plunged into cold water. The blades will be found to retain their pitch-angles if bent by this method.

Bamboo or reed cane must be bent under dry heat. This need not be excessive but the wood must be thoroughly warmed through. When ready, the wood, whilst being held at the desired curve, should be plunged into cold water. The bamboo or cane will then keep its shape.

Reed cane is sold in coils, and is rather difficult to straighten out. If the cane is soaked in water and allowed to dry while suspended with a weight hanging from one end, no difficulty will be encountered.

A useful steaming jig for bending dihedral angles in wing spars is shown in Fig. 146. This consists of a length of board upon which a centre line has been drawn. Two nails are driven into the board along this line (one nail (B) being offset to allow for the thickness of the wood to be steamed), and lines are drawn upon the board at various angles radiating from the nail (A). When being steamed the wood is bent against this nail to the desired angle. Use the jig for checking the dihedral when the wood has cooled down.

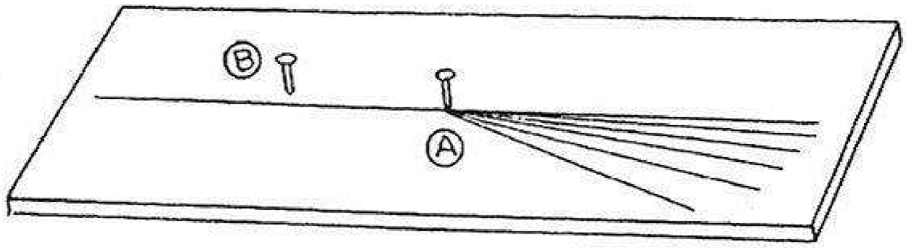

Fig. 146

To make a strong glued joint it is essential that the joint should be a good fit before gluing. This is the secret of success, and no amount of glue will make a bad joint strong. If Scotch glue is used it must be *hot* and of thin consistency. It is a good plan to warm the wood before applying the glue.

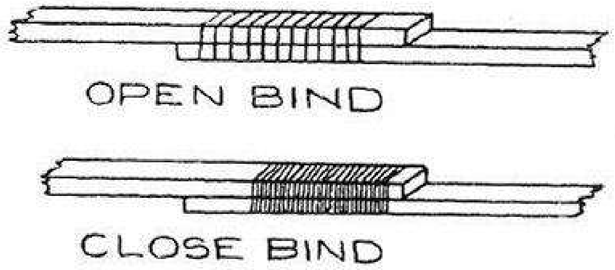

Fig. 147

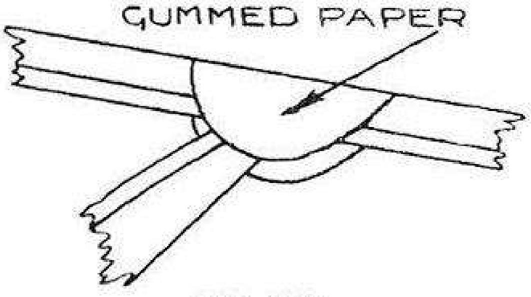

Fig. 148

When binding wood together with thread or silk, it is advisable to apply glue or cement to anchor the bind. Use an open bind in preference to a close one (Fig. 147), as this allows the glue to obtain a firm hold. Strips of gummed paper tape make a very strong binding.

The strength of small glued joints may be considerably increased by the use of gummed paper discs which are stuck over the joins. These are particularly useful for strengthening the junctions of wing ribs and the leading and trailing edges, as shown in Fig. 148. These discs are cut from gummed paper strip such as is used for securing parcels, and may be made by using a halfpenny as a template and cutting around the edge with a razor blade. If a large quantity is required, several dozen thicknesses of gummed paper may be clamped between pieces of plywood and fretted out together ; a circle being inscribed on one piece of plywood as a guide. The strength which these paper discs impart is enormous in proportion to the added weight.

Every model builder should make up a few clamps as illustrated in Fig. 149. These are simply pieces of piano wire bent into the shape of a "C." Bicycle trouser clips are ideal for this purpose, and their application is shown in the drawing. This also illustrates a method of holding the fuselage "square" while being built. Rubber bands are placed, under tension, at various points along the fuselage, and the ends looped over nails in the building board. Ensure that the fuselage sides are square with the board by checking with a set-square. If the structure tends to lean over to one side, this may be corrected by varying the tension on the band on either side of the fuselage.

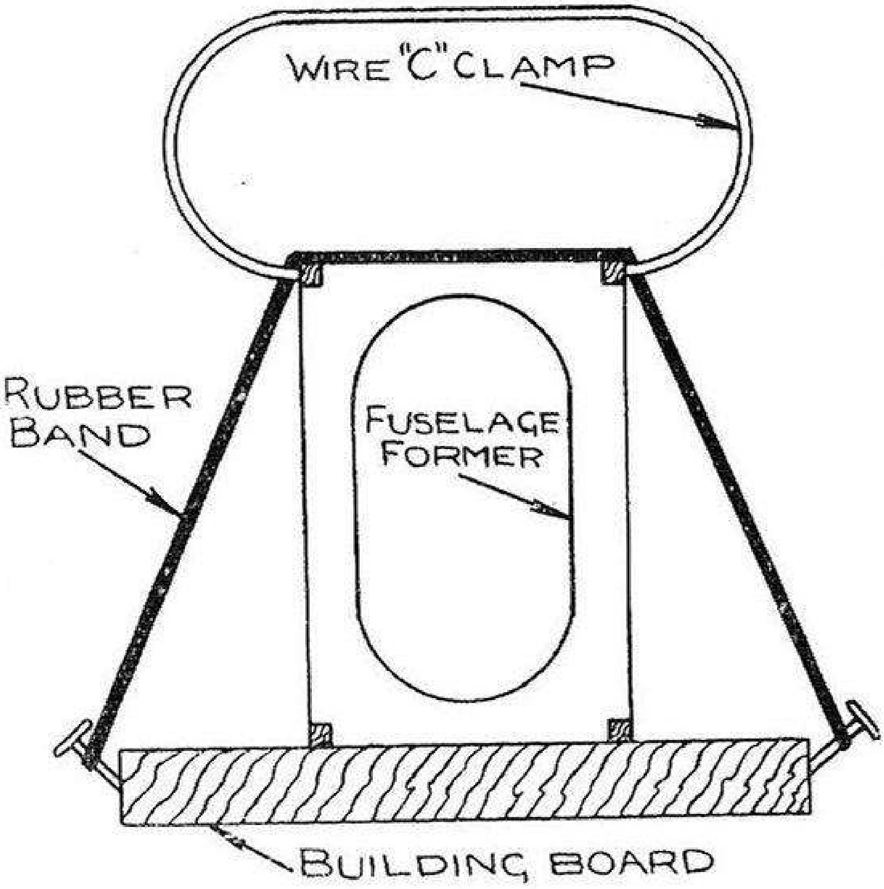

Fig. 149

Wooden washing pegs, as used for hanging clothes on a line to dry, form ideal clamps for holding small pieces of wood together whilst gluing. These pegs are of the type illustrated in Fig. 150, a small spring being incorporated. They are inexpensive.

A most useful substance for the model builder is plastic wood. Not only may this be used for fairings, wing and tail fillets and streamlining in general, but a variety of small fittings may be constructed from it. This is especially applicable to scale models, as such things as tail wheels, propeller spinners and the many similar small parts which scale models require, may be made.

While talking of scale models, it may be pointed out that devotees of this type of machine should be always on the look out for pictures or photographs from which insignia or other aeroplane details may be cut. For instance, the periodicals devoted to aircraft sometimes publish photographs of cockpits showing the instrument boards. These instrument boards are often puzzling things for the model builder to imitate, and the pictures should be cut out and saved for use on future occasions, These portions may often be stuck on to a model with good effect.

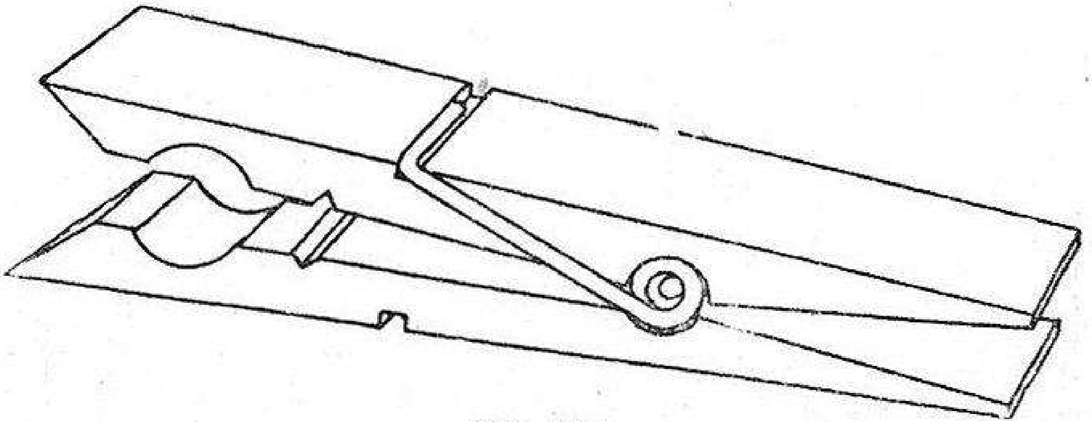

Fig. 150

Imitation engine cylinders can be carved from balsa, and the finning imitated by a spaced winding of thread or string, the whole being afterwards painted black. This is good for small models where little detail is required. Larger cylinders may be built up of alternate discs of balsa and thin plywood, the latter being cut larger, that they may protrude and give the effect of fins.

It is often possible to use ordinary drinking straws as struts on light machines. These straws are strong and light.

There are two essentials to good soldering: cleanliness and a hot soldering bit. Therefore, clean all parts to be soldered with emery cloth, and see that the copper bit is hot and well tinned. Do not, however, have the bit red hot. If spirits of salts is used as a flux, make sure that it is wiped from the joint after soldering; otherwise it is likely to corrode the metal. Use a resin flux if possible.

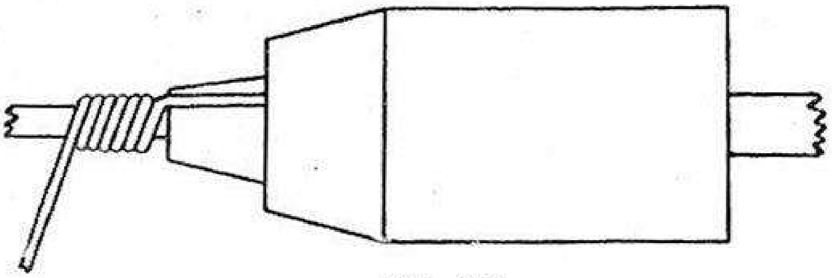

Fig. 151

When soldering metal fittings which are touching wooden parts, use an extremely hot soldering bit so that the solder runs immediately it is applied to the join. Withdraw the soldering bit directly the solder has "taken." You will then not burn the wood.

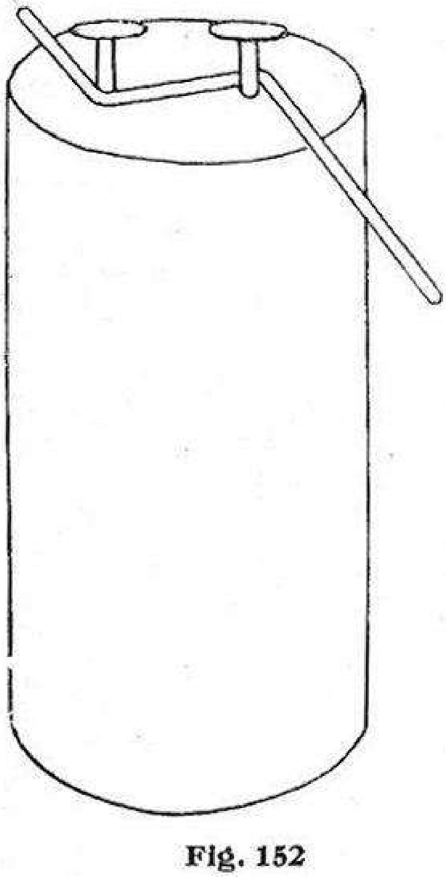

Fig. 152

A great number of small fittings may be made from celluloid. Tubing is easily made by wrapping celluloid around a warm steel knitting needle or any other warm metal rod. The seam may be joined with celluloid cement.

Never use metal if another lighter substance will suffice.

When covering structures with oil-proofed silk, the silk is rendered more pliable and easily worked if it is warmed before and during the process.

Piano-wire springs may be wound with the help of a geared hand brace. Fit a drill, of a size smaller than the required inside diameter of the spring, into the chuck, and clamp the brace horizontally in a vice. Use a long piece of piano-wire, and bend one half an inch of the wire at right angles. Insert this into one of the slots between the chuck jaws, and wind the wire on to the drill (Fig. 151). Wind on quickly, as a better spring will result. It is quite easy.

A wire bender, as illustrated in Fig. 152, is a handy accessory. It is made with a piece of broom handle and two nails.

It is advisable to fit some device whereby the nose-block is retained in the fuselage when the rubber motor is unwound.

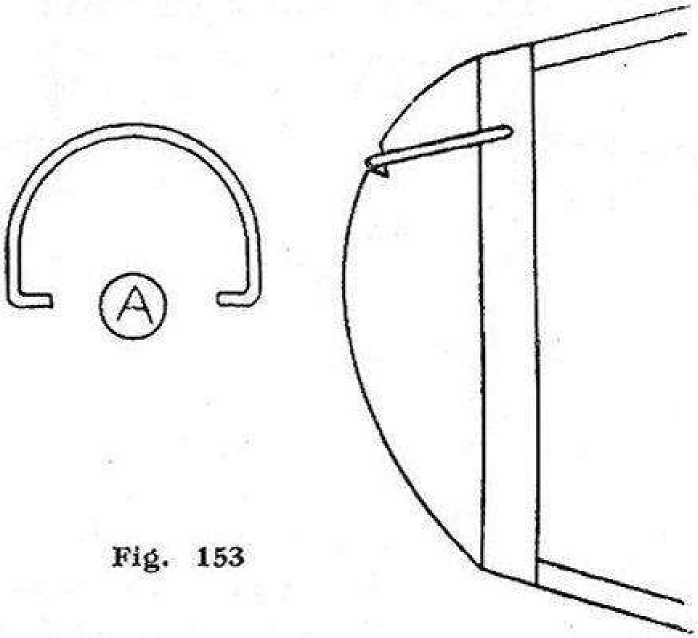

Fig. 153

If the block is allowed to fall out when the machine is in the air it will upset the balance and spoil the glide. A simple wire clip is illustrated in Fig. 153. A piece of wire is bent as shown in " A " and pivoted by the two spikes into the nose former. The weight of the wire clip itself will retain it in the slot cut in the nose-block.

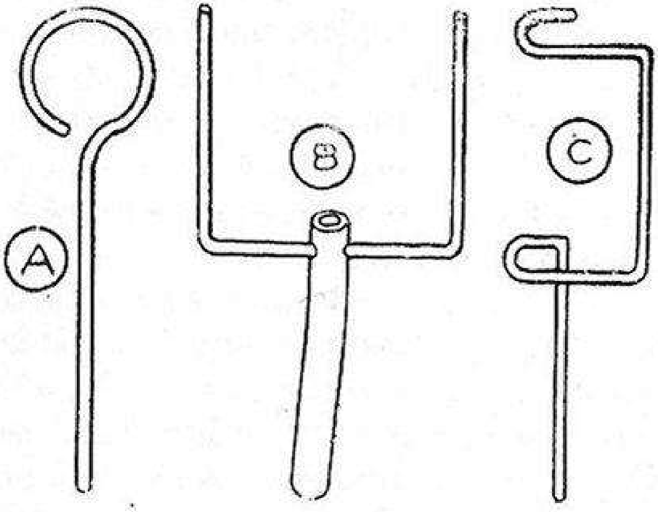

Fig. 154

When measuring rubber into skeins do not stretch it, or the loops will be of uneven length. A satisfactory method is to loop the rubber loosely over two nails driven into a board at the required distance from each other.

Never use oil to lubricate rubber motors. It will render them useless.

Before covering wire hooks with valve tubing or Sistoflex, paint the hooks with cellulose lacquer. They will rust beneath the covering if left unpainted.

A geared winder for winding propellers is an essential. Three adapters are shown in Fig. 154, for use in a geared hand brace. The plain wire hook is for use when the propeller-shaft has been bent into a loop. The attachment (B) is for use when the propeller-shaft has a plain end; while (C) is for a similar purpose, but will allow the rubber to be stretched when being wound.

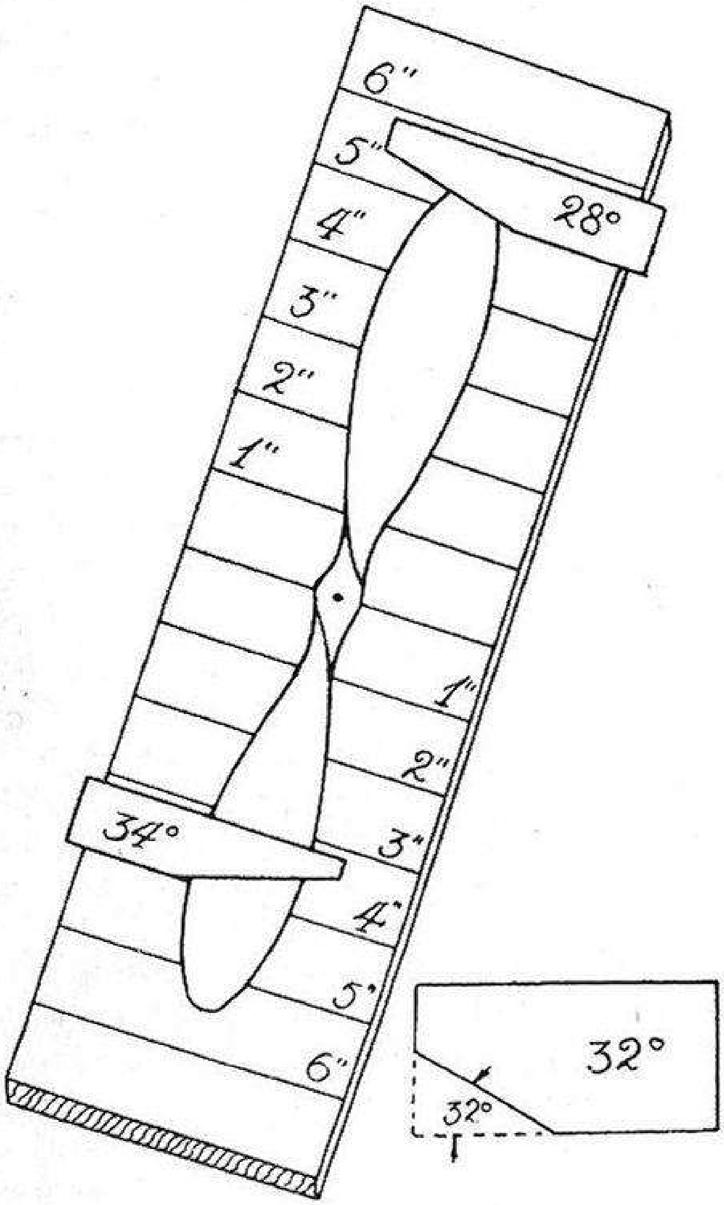

Fig. 155

An arrangement for testing propeller pitches is shown in Fig. 155. It consists of a *flat* board upon which lines have been inscribed at intervals of one inch. A nail, from which the head has been cut, is driven into the exact centre of the board, and must be "square" with it in all directions. The propeller to be tested is mounted upon the board by pushing the nail into the spindle hole. It must be a tight fit so that the propeller cannot rock.

Now cut a number of cards, as shown in Fig. 155. These may be ordinary plain post cards, and a number of them should be cut at various angles. The propeller pitch is tested by placing a card of the correct angle upon the board at the appropriate distance from the propeller boss, and seeing that the blade angle conforms to the angle at which the card is cut. A pitch tester should always be used when carving propellers.

Before any model is built it is necessary to prepare drawings, not only for guidance in measurement, but that the actual structure may be built upon the drawing. It is often helpful to use graph paper for this purpose as a great deal of measurement may be obviated. Squared paper is also helpful in ascertaining the area of a wing or tail surface, especially one of irregular shape, as the whole squares may be counted off, and the part squares added together fairly accurately. Squared paper is obtainable in either metric or inch measurements.

If a model is flown consistently near to trees it is almost certain, at some time or another, to land on the topmost branches of one of these, and it is not always possible to reach the machine by climbing. A ball of strong twine will often solve the problem. Attach a weight, such as a stone, to the string, and coil the string on to the ground so that it will not become entangled. Now take hold of the string about three feet away from the stone, and whirl this around. When sufficient velocity has been obtained, let the string go so that the stone will carry the string across the offending branch, and will fall upon the ground at the other side of the tree. With the help of an assistant, both ends of the twine are pulled simultaneously, and the branch made to sway. With a little patience the model will be loosened and will fall. Several attempts will doubtless be necessary before the twine is thrown in an effective manner.

When a body of model flyers, such as a club, uses a certain flying ground, a jointed rod for removing models from trees is often obtained as a communal possession. Any fishing rod maker will make one of these for a few shillings, and a rod of 30 feet in length is possible if stout bamboo poles are used for the lower joints.

A model subjected to the treatment outlined above would doubtless have the covering torn in places. Paper covering may be repaired by sticking a paper patch over the tear with dope. This will stick quite well and will form a very inconspicuous repair. Tears in silk should be trimmed off neatly with scissors, and the edges of the patch frayed for a distance of about a quarter of an inch. The patch is then doped over the damaged portion, the frayed edges being brushed out smoothly.

Steel knitting needles make excellent shafts for propellers or gearboxes.

It is often desirable to use birch or spruce strip of round section for such things as trailing edges and tail edges.

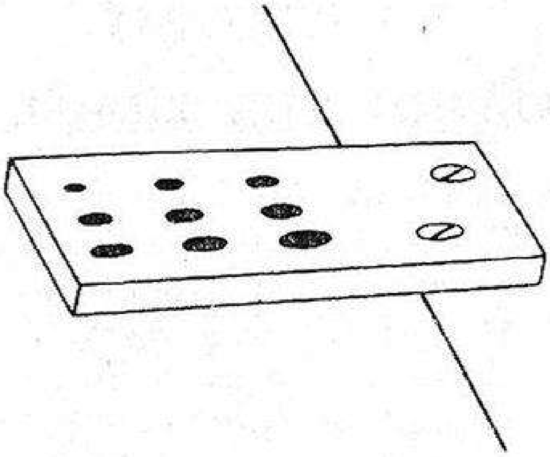

Fig. 156

This is not obtainable commercially in the smaller sizes, although square section strip may be purchased in sizes from 1/32 inch upwards.

A useful die plate, as shown in Fig. 156, may be made from a piece of $\frac{1}{8}$ inch brass or steel, and consists of a plate with a number of holes of decreasing sizes drilled into it. They may range from 1/32 inch to $\frac{1}{4}$ inch.

The square strip is inserted into the hole which is of slightly less diameter than that of the strip, and pulled through. This is repeated, using successively smaller holes, until the required diameter is attained.

CHAPTER XIV

FLYING THE MODEL

Model aeroplanes should be flown in a large open field, free from trees. This latter qualification is often difficult to attain, and if trees are in the vicinity always launch the machine so that the wind will carry it away from them. Trees are the model flyers' greatest bugbear ; the next on the list being well-meaning but ham-handed spectators who are always anxious to assist. If you fly your machine in any public park, you will soon be the centre of attraction, and the crowd of adults and small boys—to say nothing of enthusiastic dogs—will often make flying impossible. The model flyer, however, is usually able to find a suitable field where these handicaps do not exist.

Having arrived at the scene of action, the machine must be assembled and checked for alignment. The wing and tail must lie in the same plane, which means that they must sit squarely to each other upon the fuselage when sighted from the front of the aeroplane (see Fig. 157, illustration (A)). Also, the centre lines of the wing and tail must be at an angle of 90 degrees to the centre line of the fuselage (illustration (B)). Be sure that neither the wing nor tail plane is warped.

The model having been assembled, it is first necessary to ascertain the trim of the machine. If you are testing a new model, you will, of course, have chosen a day when there is little or no wind. The gliding trim may be found by placing the centre of pressure of the wing just a little behind the centre of gravity, and gently launching the machine into the air with the propeller stationary. Fig. 158 shows how the model is held when launching. Launch the model into the wind, and tilt the nose down slightly.

If the gliding angle is too steep, move the wing forward along the fuselage, and try again ; repeating this procedure until the glide is perfect. Move the wing about ⅛ inch at a time. If, on the contrary, the glide is too flat, and the model shows a tendency to stall, the opposite procedure is necessary; the wing being moved back. Do all these adjustments gradually, and avoid making drastic alterations at one time.

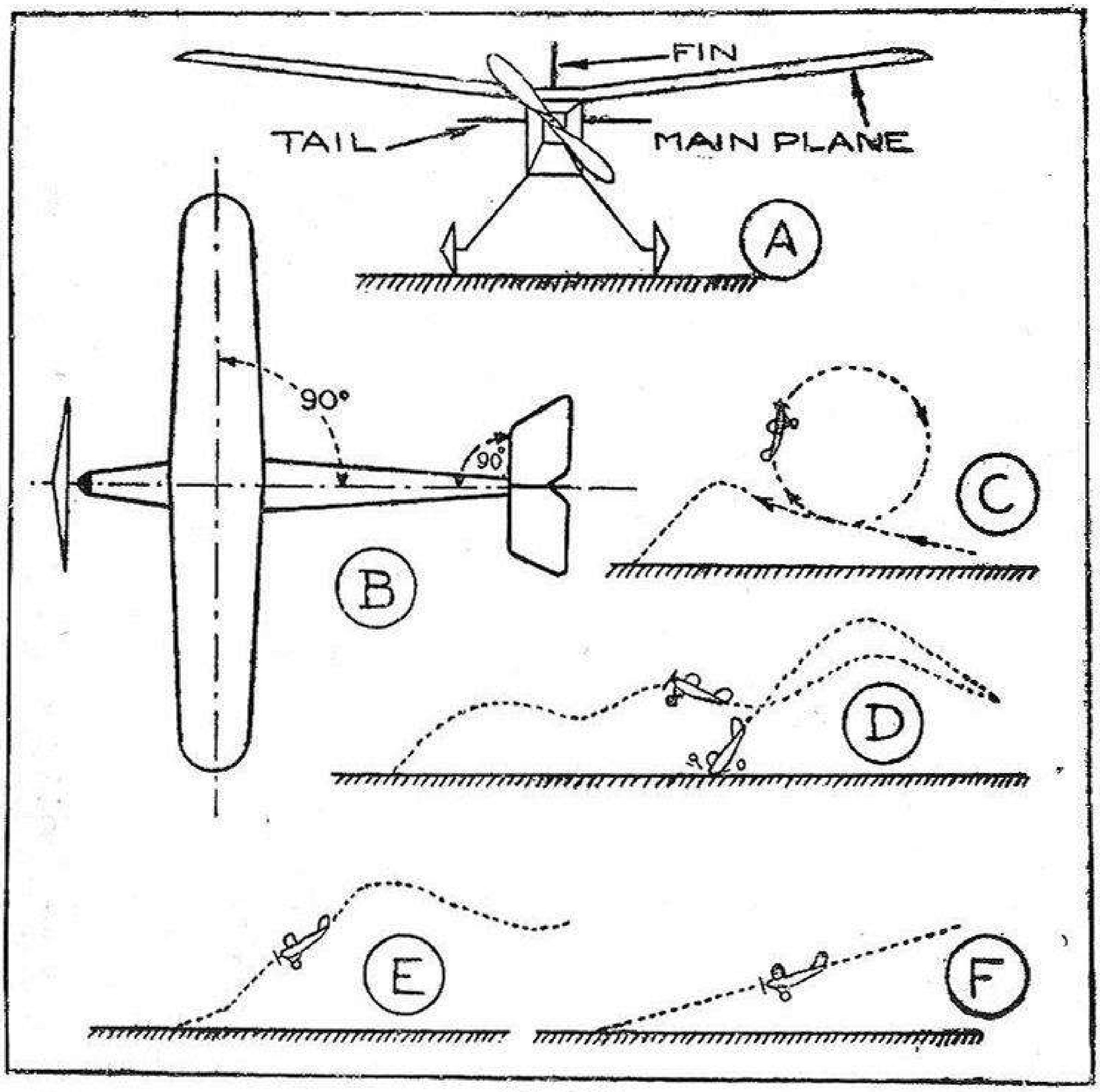

Fig. 157

The gliding trim being correct, the propeller may be wound to two or three hundred turns, but, before launching, move the main plane back about 1/16 inch. This is a precaution against stalling. If the model has been built truly, and is correctly trimmed, it should now fly quite well, although no great climb may be expected with so few turns on the motor. Under these satisfactory conditions the motor may be wound more fully, and good climbing flights should result.

It is seldom, however, that perfect results are obtained so quickly, and a fair amount of preliminary adjustment of trim is usually required. As a help to this the illustrations in Fig. 157 may be studied.

The drawing (C) shows the probable behaviour of a machine that has too much power. The machine is in the act of looping the loop, but the "sticky" end consequent upon the model making the final loop too near the ground is not shown. This is not a common fault, and the remedy is obvious.

The drawing (D) illustrates the behaviour of a model that is over-elevated, i.e. the centre of pressure is too far ahead of the centre of gravity. This results in stalling. If the centre of pressure is very much forward, the model will stall steeply and then crash to the ground ; a disastrous occurrence under full power. Should the maladjustment be slight, the machine will follow an undulating path as depicted ; not always with "fatal" results. Move the wing back along the fuselage to correct. Stalling may also be caused through the tail being set at too great an angle of incidence.

In (F) we see the result of under-elevation. The machine will fly steeply to the ground, and the remedy is to move the wing forward. The same symptoms may denote that the machine is greatly underpowered, and more rubber should, therefore, be used. Sometimes, however, a machine that is slightly under-powered will fly fairly well for a short distance under the first burst of power, but will suddenly lose flying speed. This causes the model to execute a sort of lazy stall, ending in a slow nose-dive. This is shown in drawing (E).

If none of the above troubles is obvious, the difficulty may be due to the tail being set at too small a negative incidence.

The chief cause of bad flight is a warped wing or tail plane. Under these conditions the behaviour of the machine is extremely erratic, and nothing can be done until the warps are corrected. A warped wing will usually make the aeroplane tilt sideways and cause it to take a banking dive into the ground. Warped tail planes cause very erratic behaviour ; the model turning and twisting in all directions.

Sometimes the torque of the propeller causes a model to turn persistently in one direction. This may be corrected by adjustment of the rudder fin. Should the torque effect be excessive, however, it should be rectified by packing the noseblock of the machine to one side with a slip of balsa. The packing is inserted so that the propeller shaft points to the opposite direction to that into which the aeroplane tends to turn. A packing slip of about 1/16 inch thick should be enough for a trial flight, the correct thickness being found by experimental flights. When the correct amount of "side-thrust" has been found, the packing may be cemented in to form a permanent feature of the trim. This matter of side-thrust is really a compromise between "right" rudder and "right" side-thrust. If too much side-thrust is given to the noseblock and too little to the rudder the machine will fly in wide right-hand circles, but will tend to glide straight down wind. If, on the other hand, too much rudder and too little side-thrust is incorporated the machine will fly in circles, but will spin violently to the right when the power is expended. The ideal is, of course, a correct combination of the two, which may only be found by careful experiment with individual machines in the field, and is the secret of long duration flights. Failing perfection, it is better to give too much side-thrust to the noseblock and too little

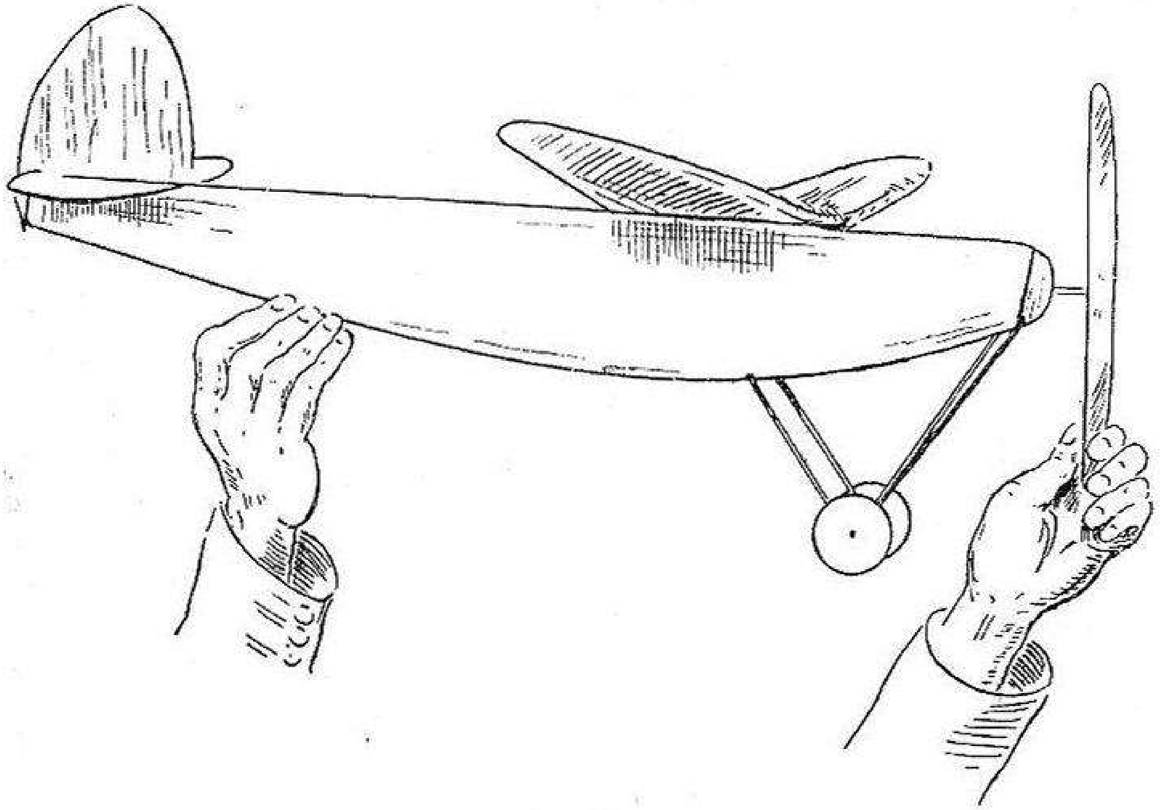

Fig. 158

rudder, as the machine will then not be in danger of a violent spin to the ground.

If a model sideslips it is a sign of insufficient dihedral angle in the main wing. Should the model wallow, too much dihedral is indicated.

When a machine is hand launched, it should be launched into the wind with the nose of the machine pointed slightly downwards. On no account must the machine be pointed upwards, unless it is exceptionally powerful and stable, or a stall will, in all probability, result. Never launch a model down wind, as not only must the aeroplane attain considerable speed before it is air-borne, but there is a danger of a gust getting under the tail before the machine is properly under way, with a resultant nose dive. If launched across the wind the propeller torque should turn the 'plane into the wind. The machine will then climb to its maximum height.

Always launch a model carefully, especially if it has a light wing loading. Heavily loaded machines may be launched faster ; in fact, the speed of the launch should be, as near as possible, the flying speed of the aeroplane. If the airscrew is allowed to revolve for a few moments before launching a smoother take-off is sometimes obtained.

Rise-off-ground flights should only be attempted from smooth ground. Launch the model either into the wind or at an angle of 45 degrees to it. This allows the torque to draw the machine into the wind.

Competition Flying

To-day, successful competition flying is a fine art, which not only calls for a model of exceptional capabilities, but requires a great degree of skill and preparation. The days when a practically untried model could win a competition are over, and it is now necessary to know the characteristics of the competing machine under all conditions. For this reason it is as well not to enter for too many competitions of various kinds, but to specialise in one type. This will allow plenty of time to develop your competition machines and to learn to fly them.

To become used to a model it must be flown consistently. This calls for a robust machine, with special attention paid to parts which must be frequently handled. Fly the machine in all reasonable weather, as one can never say what this will be like on the actual day of competition. If competing in rise-off-ground events see that the undercarriage is strong and rigid and that the wheels track properly. Undercarriages which wobble in flight have a very disastrous effect upon stability.

Select, then, your competitions, and concentrate upon these, making quite sure that you understand the rules which govern them. Many competitions are run under special rules, as distinct from the usual S.M.A.E. regulations, and there are few things so disappointing as to arrive at an event with a good machine which does not comply with the regulations.

If, during the preliminary or eliminating flights, your machine gets out of trim, do not make unofficial test flights while other competitors are flying. Ask the judges for permission to test your 'plane. This is not only a competition rule but is one of the courtesies of flying.

As a man is known by his friends, so is a wise competitor known by his helpers. Choose these carefully, selecting those who not only know how to handle a delicate machine, but who will be more interested in helping you than in watching the other machines performing. Above all, select those who will not talk while you are counting the last fateful turns on the rubber motor.

It is important to know the exact number of turns that your motor will take. Do not put on the maximum number until the last flight, as a broken skein will often wreck a light machine. Have two or three identical rubber motors at hand, in case you break strands during the early flights. These spare motors must be well lubricated and *run-in*. Do not trust to new rubber, and watch the rubber hooks carefully during winding to ensure that the motor is not slipping off these.

On windy days see that the wing and tail are firmly fixed to the fuselage. Increase the number of rubber securing bands if necessary, as it is disastrous for the wing or tail to lift from the fuselage during flight. On windy days, also, it is better to obtain trim by slightly weighting the nose rather than by moving the main plane backwards upon the fuselage. The wind will supply the necessary extra lift.

Should the day be hot and sunny, do not, between events, leave your model in the full glare of the sun. Always place it in the shade, and look at it from time to time to see that the shadow has not moved so as to expose the model. Many competitions have been lost through neglect of this precaution; the model becoming too warped to perform correctly.

When flying on hilly ground or near large buildings (such as aeroplane hangars) endeavour to fly the machine so that advantage may be taken of any upcurrents of the air. These will be found on the same side of the hill or building as tha from which the wind is blowing.

CHAPTER XV

THE " A.C.2 "

A Lightweight, Shoulder-wing Monoplane

This machine is a direct development of the original " Air Cadet," which was specially designed by Mr. C. A. Rippon for the Air Cadet Corps, and it has speedily gained a reputation for its good, all-round qualities. The design has brought the machine more into the duration class, and forms a good example of modern practice.

While it is not an over-simplified design, its building should present no difficulties to the ordinary run of aeromodellers, and even the absolute beginner should not find the job too difficult. The matter has been simplified by the fact that full-sized blueprints of the aeroplane are available. The drawing, Fig. 159, is a much reduced reproduction of the actual print, and from it builders may see that the construction has been well detailed. All points which might not be clear to those unaccustomed to the reading of drawings have been shown in isometric form, and, together with these notes on the building of the machine, should clear the path of any obstacles. All intending builders must, therefore, obtain a copy of the print ; in fact, it is difficult to see how the job can be satisfactorily tackled without it.

On obtaining the print it should be carefully studied in all its parts, so that the constructor is familiar with every detail before commencing to build. Having thus become acquainted, the print should be covered with a sheet of tracing paper, and the two pinned to a flat board. If such a large board is not available, it becomes necessary to trace the various components, such as wings, fuselage, etc., upon smaller pieces of tracing paper, which may be more conveniently pinned to the available board. In this manner the

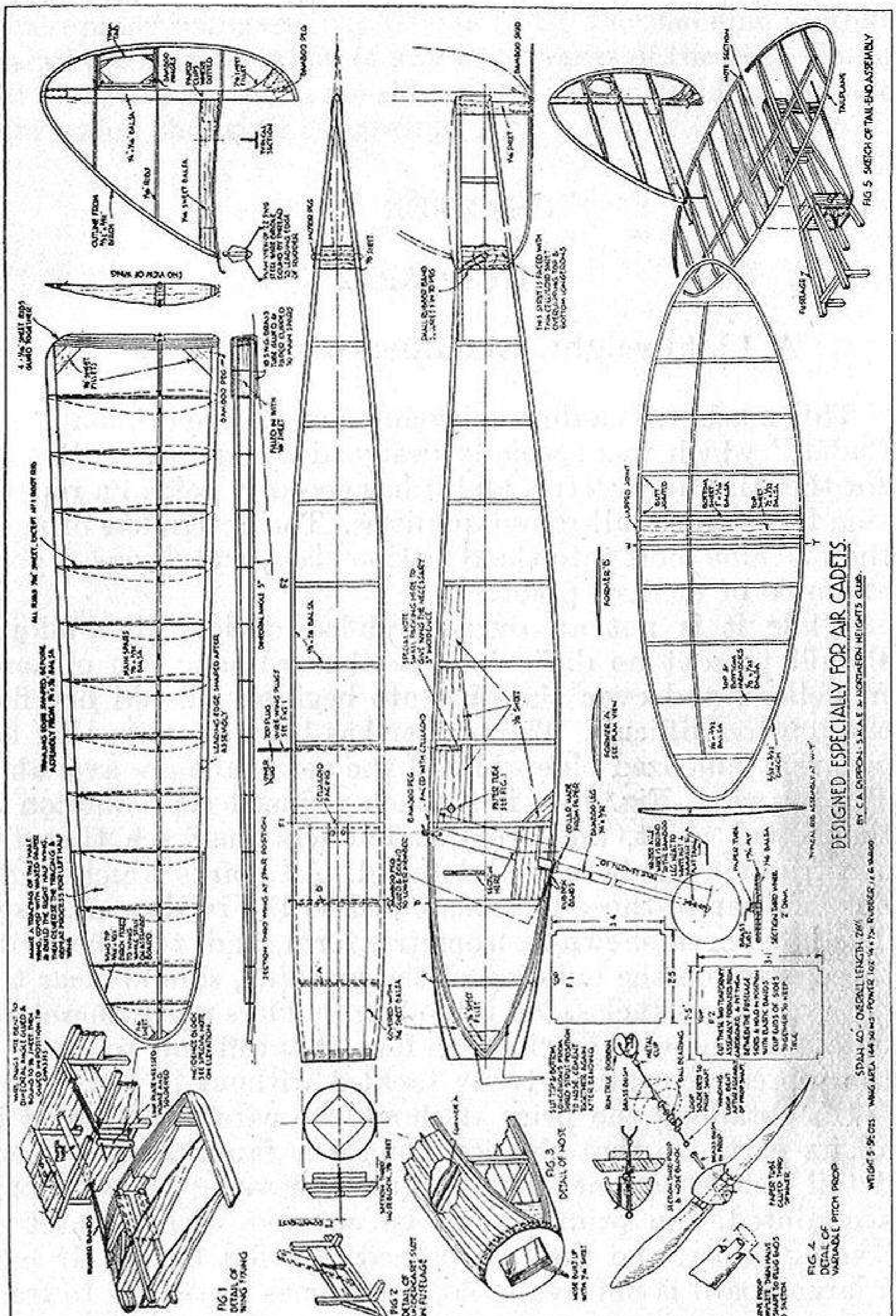
FIG 1 DETAIL OF WING FIXING
FIG 2 DETAIL OF UNDERCARRIAGE SLOT IN FUSELAGE
FIG 3 DETAIL OF NOSE
FIG 4. DETAIL OF VARIABLE PITCH PROP
FIG 5 SKETCH OF TAIL-END ASSEMBLY
TAILPLANE
FUSELAGE
FORMER A
FORMER B
DESIGNED ESPECIALLY FOR AIR CADETS.
BY C. A. RIPPON: S.M.A.E. & NORTHERN HEIGHTS CLUB.
SPAN 40" OVERALL LENGTH 28½"

Fig. 159

machine may be built upon a piece of floorboard, 36 inches long by 5 inches wide—but it must be smooth and free from warps.

Fuselage

By studying the side view drawing of the fuselage, in conjunction with the photograph in Fig. 162, it will be seen that each side of the fuselage consists of two pieces of balsa, joined together with balsa uprights. At the front end, the two longerons are drawn together to form a point. Between these points a round nose former is cemented, and the nose of the fuselage completed by sheeting in with 1/6th inch sheet balsa, which is cut into strips, and cemented, upon small supporting formers, from the nose to the end of the third bay of the fuselage.

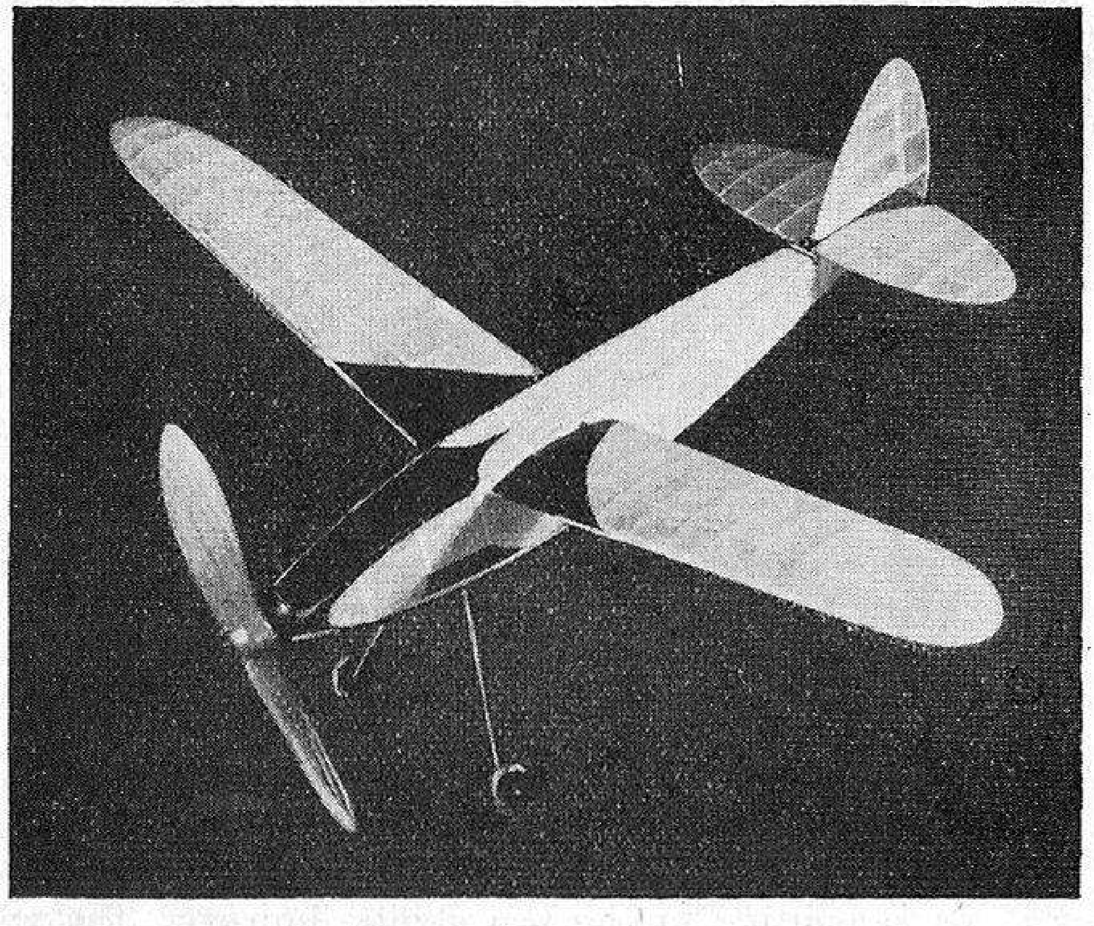

Fig. 160. "A.C. 2" ready for the air

The arrangement presents no difficulties, except, perhaps, in obtaining the acute bends necessary on the side longerons, so that they may be drawn together to a point. Balsa of 1/8 inch square section will not, in the usual course, bend to this extremity, and the following procedure must be adopted. Marking the points on the longerons where the bend commences, the longerons are split from here to the nose, in the manner shown in Fig. 161. By doing this it is possible to bend the balsa to very acute curves, as it is really equivalent to bending two strips of 1/8 inch × 1/16 inch balsa. Before bending, the slit is filled with cellulose cement, and when once bent, and the cement set, a very permanent curve is formed. An alternative method is to use two strips of 1/8 inch × 1/16 inch balsa for the curved portion, and to splice these into the main longerons which are retained at the rear. The splice is shown in the lower sketch of Fig. 161.

Having built one side of the fuselage upon the drawing, the second side is built flat upon the first. Small pieces of tissue paper should be placed between the two sides at the points where cement will be applied, to prevent them from sticking together. It is a great aid in obtaining identical sides if the small balsa joining pieces are cut in pairs ; that is, those for both sides are cut together.

The two identical sides being thus obtained, they should be pinned, in a vertical position, upon the plan drawing. As the bottom longerons are in the form of a long curve it will not be possible to pin these to the board, so that it is the top longerons which must be pinned down, and the fuselage built, as it were, "upside-down." The two false formers, cut from cardboard, are now inserted, and held with elastic bands, or by means of the wire " C " clips shown in the chapter on " Hints and Tips."

As before, it is again recommended that the cross-struts be cut in pairs. The bottom set of struts should be cemented in first, and there is no difficulty here as these lie upon the board. In cementing in the top struts, however, the wire " C " clips just mentioned should be employed to hold the fuselage sides together.

Next, sheet in the nose, and cement in the balsa reinforcements at the wing location, and at the points where the undercarriage legs emerge. The peg for anchoring the rear end of the rubber motor passes through holes in small pieces of 1/8 inch balsa, which are cemented into all four sides, at the points shown. The two side pieces are then covered with thin sheet celluloid, the edges of which are lapped over the top and bottom edges of the fuselage. The celluloid sheet is cemented on.

Wing-fixing

An extremely neat and efficient method of attaching the wings to the fuselage is used. It consists of two wire plugs, or prongs, which protrude from the sides of the fuselage, and locate into short pieces of brass tubing affixed to the wings. The assembly is then clamped together with a rubber band, which passes, from one wing to another, through a tube rolled from gummed-paper strip.

The wire plugs are of 18 S.W.G. piano wire, with the correct dihedral angle bent into the ends. These wires are cemented and bound with paper strip to a piece of 1/8 inch balsa, which is cemented across the fuselage at the position shown. The paper bindings should be about 3/16 inch wide, and may be cut from a length of gummed-paper, parcel tape. Next, roll the paper tube from similar paper tape, and cement it through the holes in the balsa side plates, as shown in the plan. The isometric drawing in the top left-hand corner should make the foregoing matter clear.

Special note should be given to the small metal link-plate which is pushed over the protruding wire prongs, and soldered into this position. Cut the link-plate from a small piece of thin brass, and drill the holes accurately. As this plate butts up close to the inner rib of the wing, when it is in position, it is necessary that the plate should be packed out at the bottom to conform to the wing dihedral of 3 degrees.

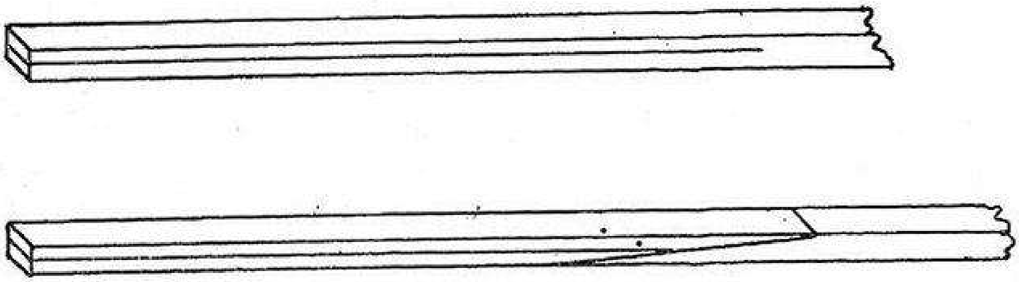

Fig. 161

Undercarriage

This is of novel pattern, designed and well tested by Mr. C. A. Rippon. Briefly, the legs are swivelled at the tops to the top planking of the fuselage; they then protrude downwards, through slots in the lower fuselage sides. At this point, rubber bands are incorporated which return the legs to the front of the slot when they have been pushed backwards by the landing of the machine. As the undercarriage is so well shown in the drawing, little comment should be necessary.

The legs are of bamboo, tapered and shaped to be a slide-fit in the slots. The small holes at the top of the legs, through which they are anchored by rubber bands to the fuselage top, are best bored with a piece of 16 S.W.G. piano wire which has been made red hot. If an attempt is made to drill the holes it will be found difficult to prevent the bamboo from splitting.

Wings

These are constructed with fairly sturdy leading and trailing edges, and a main spar composed of two lengths of 1/8 inch × 3/32 inch balsa. Tracings should be made of all the ribs, as shown in the drawing at their respective positions. The tracings may then be transferred to the sheet balsa from which the ribs are to be cut, or they may be pasted to the balsa sheet and cut around the outlines.

It will be noted that the trailing edge is shaped before assembly of the wing, but the leading edge is sanded after assembly to conform to the nose profile of the ribs.

As in the case of the fuselage, a full-sized drawing should be made upon tracing paper, pinned to a building board, and the wing construction done upon this. When one of the wings has been built and removed, the paper may be turned completely over, the drawing traced through, and the second wing built upon this. In this manner, right- and left-handed wings are obtained.

Pin the leading and trailing edges to the board to conform to the drawing; also the lower member of the main spar. Now insert the wing ribs, which are butt-glued to the wing edges. It will be necessary to pack the leading edge up from the board with a piece of 1/16 inch balsa strip, to allow for the underpart of the ribs which are lower than the leading edge.

While the cement is setting, the wing tips of 3/32 inch × 3/32 inch birch, may be cut to length and steamed to shape. To ensure identical wing tips it is well to bind two lengths of birch together, with cotton, and to steam them in one operation. After steaming they should be held in the bent position until the wood has cooled down.

From the front view of the wing, as shown in the plan, it will be seen that the space between the main spars is filled in with 1/8 inch sheet balsa, for the distance between the two root ribs. At the same time it will be noted that the root rib itself is composed of four 1/16 inch balsa ribs cemented together. The brass tubes which receive the wing-fixing prongs, are cemented to the top and bottom of the main spar, and are further reinforced by sticking strips of gummed-paper tape over them. These details are amplified in the excellent isometric sketch in the top left-hand corner of Fig. 159.

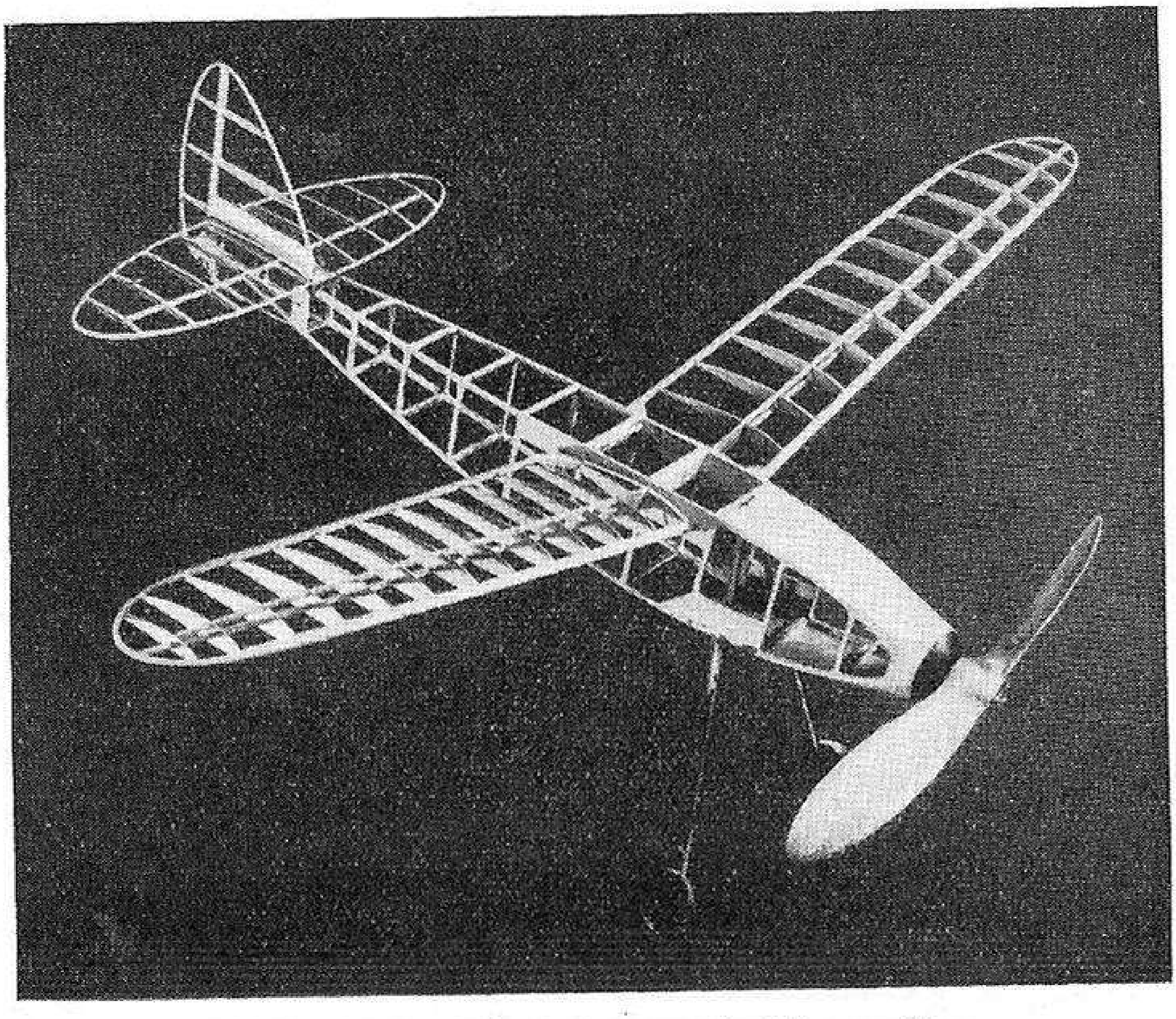

Fig. 162.—The completed framework of the machine

Tail Unit

A non-lifting tail plane is used, of quite simple construction. Having prepared our tracing we must proceed to bend the edges of the tail and fin in the steam from a boiling kettle. It will be apparent from the plan that the tail edging is in two halves, which are joined together in the centre, by means of a lapped joint. Taking two pieces of 3/32 inch by 3/32 inch birch, of suitable length, bind these together with cotton and steam them to shape, as was done with the tips of the wings. Now pin the edges to the drawing. It will be noted that the ribs are composed of two strips of 1/8 inch by 1/32 inch balsa, through which runs the main spar. The lower portions of the ribs may now be cemented between the edges, and the piece of sheet balsa cemented into the centre. Now glue on the main spar. All that is now required is to cement in the top portions of the ribs, and the top balsa sheeting over the centre, and to round off the birch edges with glasspaper.

Tailfin

Owing to the method of construction used, the tailfin cannot be built flat upon a board. It will be necessary, therefore, to steam first the edge to shape. Now, carefully measure the length of the main upright, cutting the ends to the radii which will conform to the edging. Do the same also with the piece of 1/16 inch sheet balsa which is cemented at right-angles to the upright, and runs along the lower rib. On the plan it will be observed that the upright is located into the rectangular holes cut into the three ribs. Cut the ribs to length and thread them on to the upright spar, but do not cement them for the moment. The next step is to cement the balsa upright to the fin edging, in the position indicated, and next, to cement the piece of 1/16 inch sheet balsa from the upright spar to the extremity of the front edge. This will hold the structure firm, when it will be possible to slide the fin ribs into their positions, and cement up.

A small trimming tab is provided, and this is made up from 1/16 inch balsa, to be an easy fit in the appropriate panel of the fin. It is then hinged between the two ribs upon small bamboo pegs. Do not overlook the balsa fillets, nor the clippings of gummed paper which are indicated on the drawing. The isometric sketch of the tail assembly, in the lower, right-hand corner, fully explains how the tail is secured to the fuselage by rubber bands hooked to the wire fitting in the front, and the peg at the rear.

Propeller and Noseblock

An unusual feature of this machine is the propeller of adjustable pitch. A propeller of 14 inch diameter is used, and this should be curved to shape in the usual way, with a pitch of approximately 16 inches. The propeller is carved as a whole, and then cut into halves, so that the butts of the blades may be shaped into small dowels. The spinner, which, it will be observed, is hollowed at the back to accommodate the freewheel device, may now be made. Next, drill a hole through the spinner from side to side, and bush it with a tube made from gummed-paper tape, so that the dowels of the blade-butts are a tight, push-in fit. This system holds the blades firmly enough for flight. It will be understood, of course, that an airscrew of fixed pitch, such as is commonly used, may be substituted for the one of adjustable pitch, if desired. In this case the pitch should be about 18 inches.

Whichever propeller is used, the following steps are now necessary. Drill the propeller boss for the spindle, and bush it with a piece of 16 S.W.G. brass tubing, or with one of the special bushes sold for the purpose. A length of 16 G. piano wire, formed at one end into a yoke for the "Run True Bobbin," comprises the propeller shaft. It may be seen in exploded view at the bottom left-hand corner of the print, where it will be seen that it passes through a brass bush in the noseblock, and that a small, ball-thrust race is then threaded on. A loop of 22 G. steel wire is then soldered to the shaft between two cup washers, which are also soldered. The propeller is then threaded on to the shaft, and is retained by a loop formed in the end. A freewheel, clutch action is provided by a piece of 18 G. wire, which swivels in a brass tube let into the noseblock, and engages with the loop on the propeller shaft.

Covering and Doping

The whole machine is covered with medium-weight tissue paper, sprayed with water and left to dry. This water spraying will, in itself, considerably tighten the paper covering, even before it is doped. The model should be well rubbed down, before covering with the tissue, with fine glasspaper, as any rough places are liable to catch in the tissue and cause wrinkling.

All the covering should be given a coat of banana oil dope, and when this is thoroughly dry, apply a second coat to the wings and fuselage only. The tail unit, being a comparatively light structure, might be warped by the considerable pull which two coats of dope will exert.

Rubber Motor

One ounce of $\frac{1}{4}$ inch by 30 rubber strip ; that is, 6 yards, is made up into a skein of eight strands. It should be pre-wound by the White tensioning system, and well lubricated before use.

General

The machine is such that it may be flown in any competition formed under the Flight Cup formula. The record duration of flight for machines of this class is over 16 minutes, so that the "A.C.2" should form a useful challenger in this type of competition.

The method of fixing the wings to the sides of the fuselage, as is done in the present machine, has the advantage that full benefit may be had from the total wing area of the machine, no part of the wing being obscured by the top of the fuselage.

CHAPTER XVI

THE "PEDIGREE PUP"

A Low-wing Lightweight Monoplane

The "Pup" range of model aeroplanes, designed by Mr. C. A. Rippon, and starting with the now famous "Cruiser Pup," are too well known to need introduction. This latest addition, designed specially for this book, has all the good features which were found in the previous models, in combination with the latest practices in model building. In appearance, too, the machine is, probably, the best of the range. The duration of flight equals or surpasses that of the previous machines, whose recorded durations have run into many minutes.

Fuselage

Owing to the manner in which the wing is fitted up into a recess in the bottom of the fuselage, a rather special procedure must be followed in the construction of the fuselage for this machine, and the following notes will be necessary.

It may seem strange to commence the building of the fuselage by first making a portion of the wing, but, as will transpire, this is the best method. The first step, therefore, is to build the small centre-section of the wing, as shown in the print, and also in the photograph, Fig. 165. While this is drying, build the base of the fuselage, flat upon the building board, to the special detailed drawing of this component which is given on the blueprint. The cross-members of this base are of 1/8 inch × 1/16 inch balsa, laid *flat* on the board.

Now we must cut out the 1/32 inch sheet balsa webs to the exact shape shown on the drawing. It is important that these pieces are correct, and that the two of them are

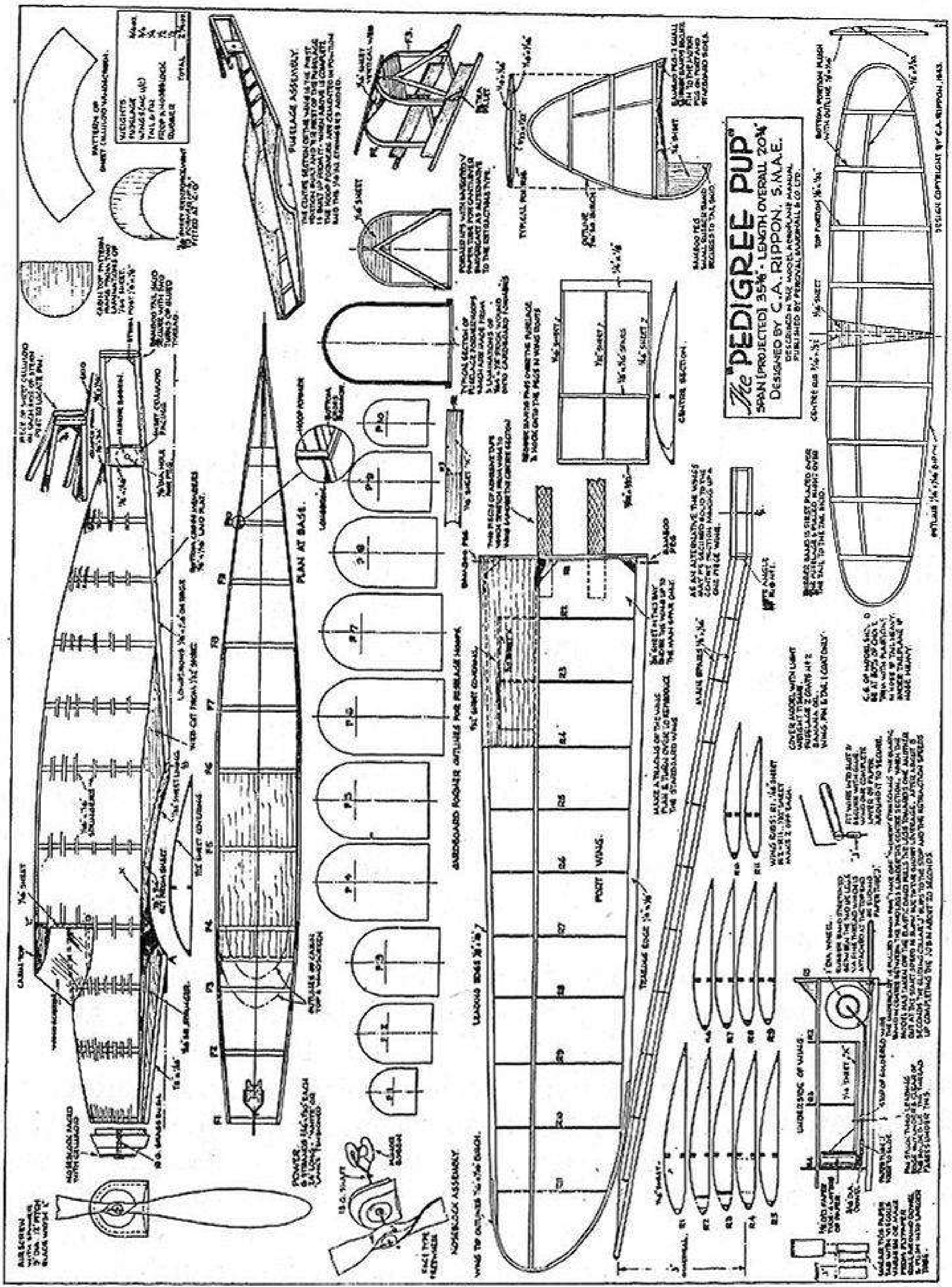
The "PEDIGREE PUP"
SPAN (PROJECTED) 35⅜" · LENGTH OVERALL 20¾"
DESIGNED BY C. A. RIPPON, S.M.A.E.
DESCRIBED IN THE MODEL AEROPLANE MANUAL
PUBLISHED BY PERCIVAL MARSHALL & CO. LTD.
PLAN AT BASE.
PORT WING.
CENTRE SECTION.
FUSELAGE ASSEMBLY.
NOSEBLOCK ASSEMBLY
LEADING EDGE
TRAILING EDGE

Fig. 163

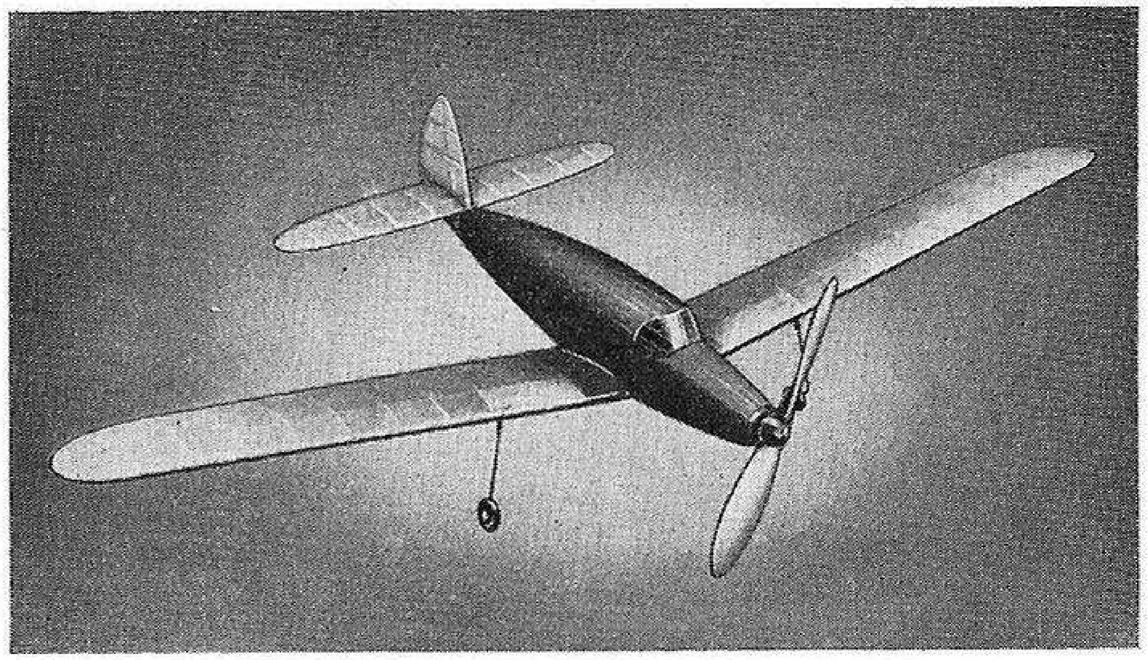

Fig. 164.—The completed "Pedigree Pup"

identical, especially the base angles (A) and (B). Next cut out the curved stiffeners (X) and cement them to the webs, remembering that these are right- and left-handed.

The centre section being now ready and covered with 1/64 inch sheet balsa with the grain running crosswise, make a similar balsa covering upon the top of the centre-section, but separated from it by a sheet of tissue paper. Now, place the webs on the top of this separate balsa covering and cement them to it. We may now take the base, which we have already made (see print), cut out the centre portion, and cement the remaining portions to register with the angles of the 1/32 inch webs. Incidentally, the webs

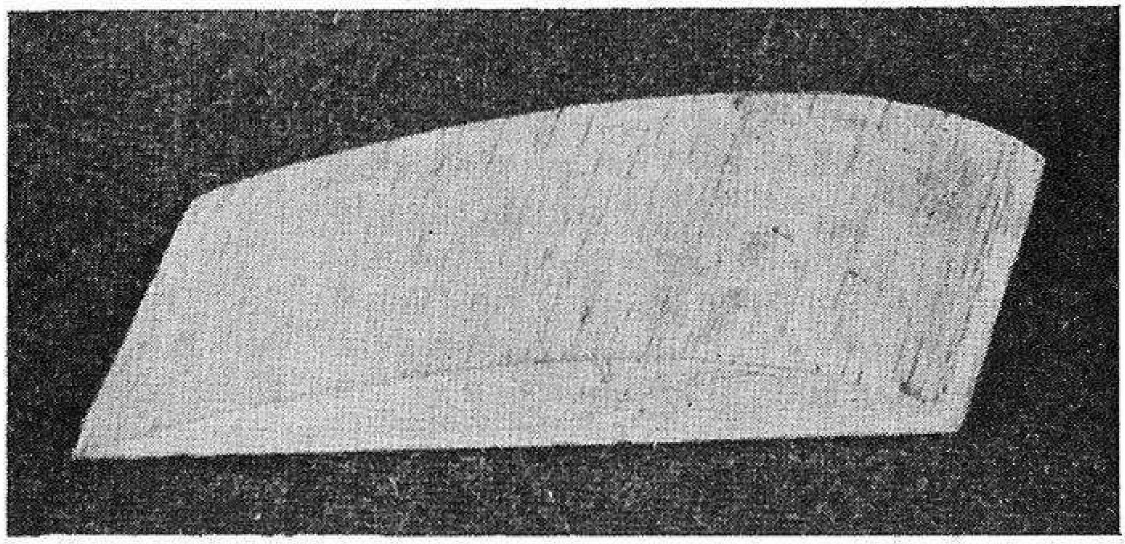

Fig. 165.—The centre wing-section upon which the fuselage is built

must be notched to register with the built-up base.

The structure so far attained forms a basis upon which the fuselage may now be completed, so it should be packed up at each end with parallel pieces of wood, and firmly pinned down to the baseboard.

While the cement is again drying, make the formers or hoops. The jigs are cut from cardboard to the shapes shown on the drawing. The hoops themselves are wound from three layers of 1/64 inch sheet balsa, which is cut into long strips 3/32 inch in width. In winding, each layer is cemented to the next as the hoop is wound. In the case of hoop No. 4, after removal from the jig, a shaped balsa half-former is cemented into the rounded top portion. This as shown shaded in the drawing.

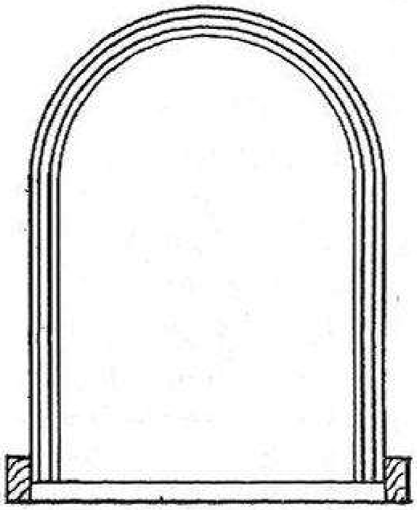

Fig. 166

At this stage, while waiting for the cement to dry off on the formers, the rear portion of the fuselage, upon which rests the tail-plane and fin, may be built up. The side plates for the reception of the rear rubber hook, and the top stiffeners, are of $\frac{1}{8}$ inch sheet balsa, and the correct sizes may be had from the drawing. This portion being completed, the hoops may next be cemented into their respective places upon the base. Before doing this, however, each hoop must be carefully sanded to thickness. The manner in which the hoops are cemented in is shown in the drawing (Fig. 166), where it will be noted that the ends rest upon the cross-members of 1/8 inch × 1/16 inch balsa, and register against the balsa side longerons of the base.

The stringers may now be applied. Cement on the top stringer (i.e. stringer No. 1) which runs from former No. 4 to former No. 11 at the rear of the fuselage. Now apply the next two stringers upon either side (i.e. stringers No. 2, 2, right and left) which run from former No. 4 and terminate between formers Nos. 8 and 9. The ends of these stringers are chamfered off to a wedge shape, so that they will not make unsightly lumps in the covering, and may be seen quite clearly on the top of the finished fuselage portrayed in Fig. 167.

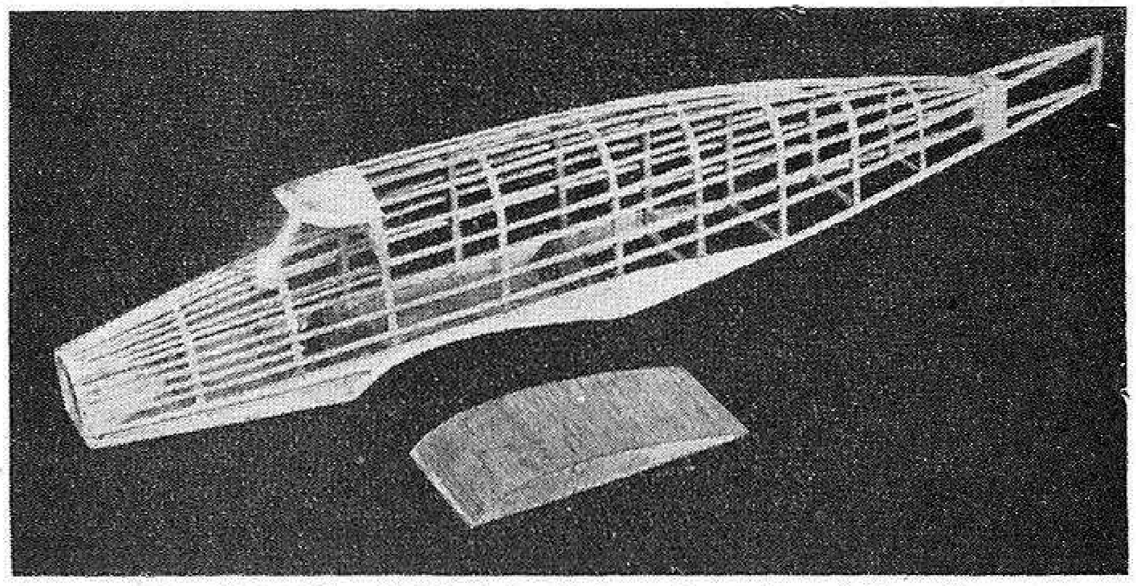

Fig. 167.—The finished fuselage and centre wing-section

Stringers No. 3 (right and left), while starting at former No. 4, terminate between formers Nos. 9 and 10, where they are likewise chamfered off. Stringers Nos. 4 and 5 run the complete length of the fuselage to former No. 11; as do stringers Nos. 6, 7 and 8 along the sides of the fuselage.

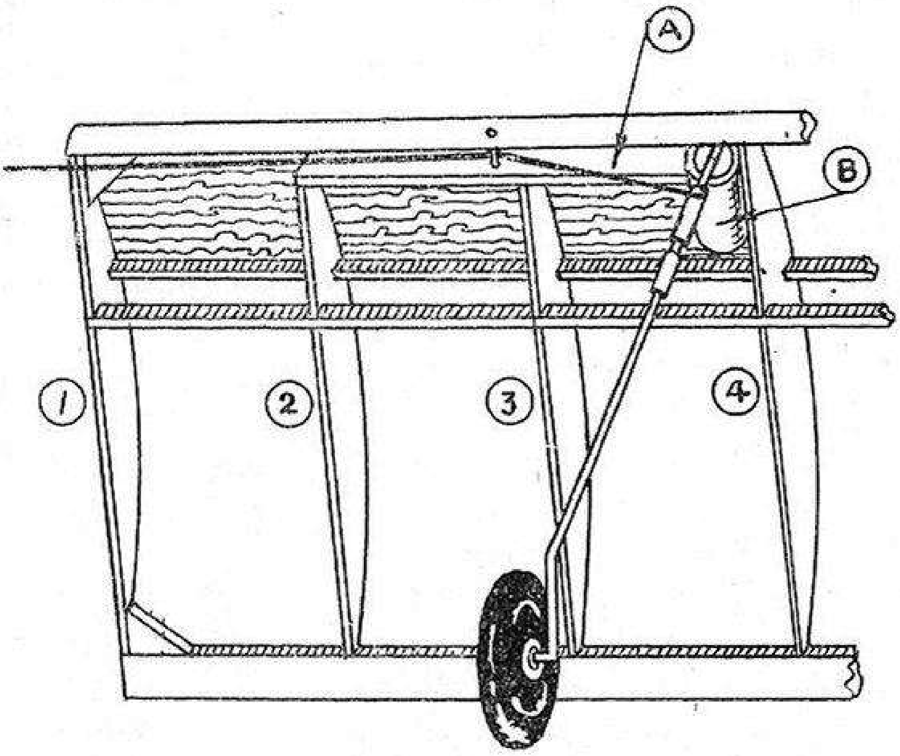

Fig. 168

Next, the nose is filled in with the stringers, as depicted on the drawing.

The balsa cabin cover may now be fitted, the shape of which may be obtained from the print. The pattern for the celluloid windscreen is also given, with a small allowance for trimming after cementing in. At this stage, the structure should appear as shown in the photograph in Fig. 167.

Wings

The primary step in wing construction is to cut the ribs to the shapes shown, from sheet balsa. Two sets of 11 ribs are required. This done, pin the leading and trailing edges down to a plan drawing of the wing. The leading edge may be packed up from the board with small pieces of 1/32 inch balsa, to allow for the undercurvature of the ribs. Shape the trailing edge to a wedge section before pinning down, but the leading edge may be sanded to shape after assembly. The lower member of the main spar may also be pinned to the board, after which the ribs should be cemented into place, and the top member of the main spar added.

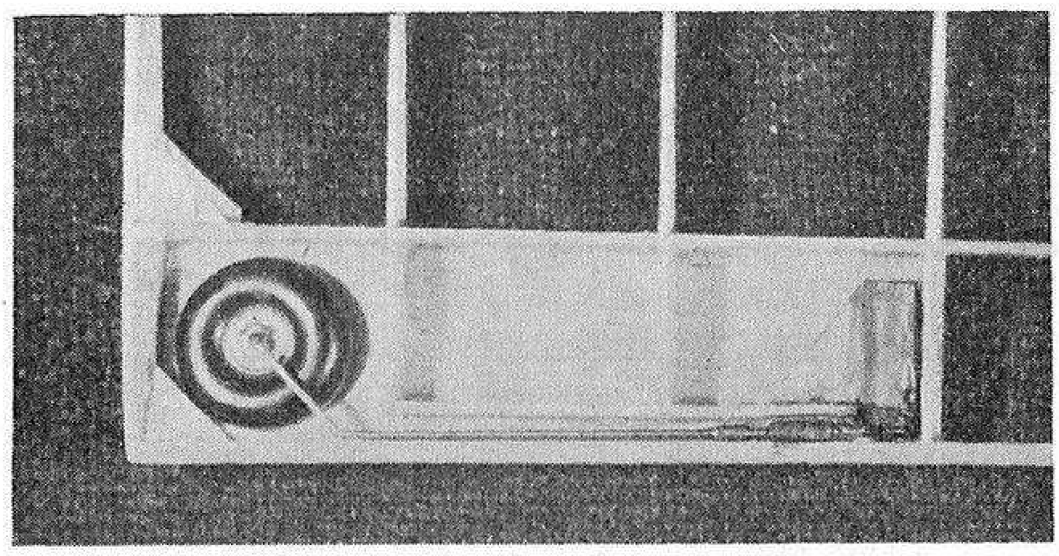

Fig. 169.—The wheel and leg retracted into its housing beneath the wing

The self-retracting undercarriage requires a rather special arrangement of housing to be built up behind the leading edge of the wings near the root. While this arrangement is well shown on the blueprint the isometric drawing in Fig. 168 will, perhaps, serve to make the matter more clear. Here, it will be seen that the ribs marked 2 and 3 are cut short so that they terminate about ¼ inch from the leading edge. Across the noses of these two ribs is cemented a strip of balsa, marked (A); this, however, falls about 5/16 inch short of rib No. 4. To complete the undercarriage housing it is now only required to sheet over the leading edge between rib No. 4 and the root rib, from the main spar to the leading

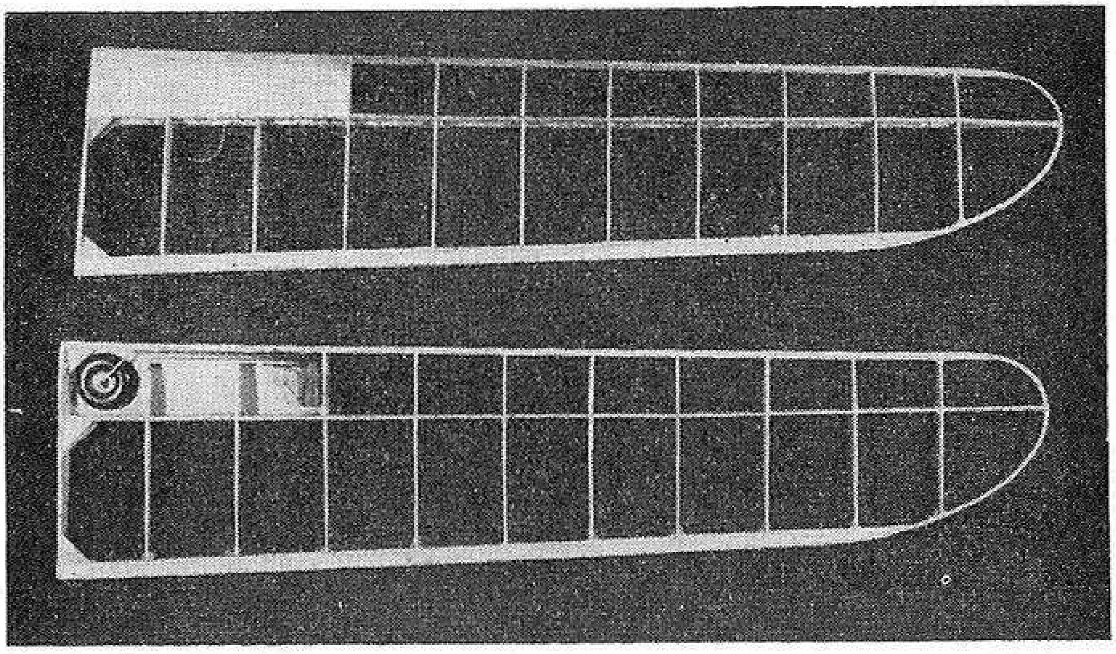

Fig. 170.—The wing frameworks, showing one wheel retracted

edge. In this manner a channel is formed along the inside of the leading edge, into which the undercarriage leg may lie ; at the same time, a compartment is formed between ribs Nos. 1 and 2 which will house the wheel. The photograph, Fig. 169, shows the arrangement quite well.

On removal from the building board, the wing tips, which have been steamed to shape in accordance with instructions given elsewhere in this book, should be cemented into the recesses prepared for them in the edges of the wing. The addition of the small corner blocks, shown on the print,

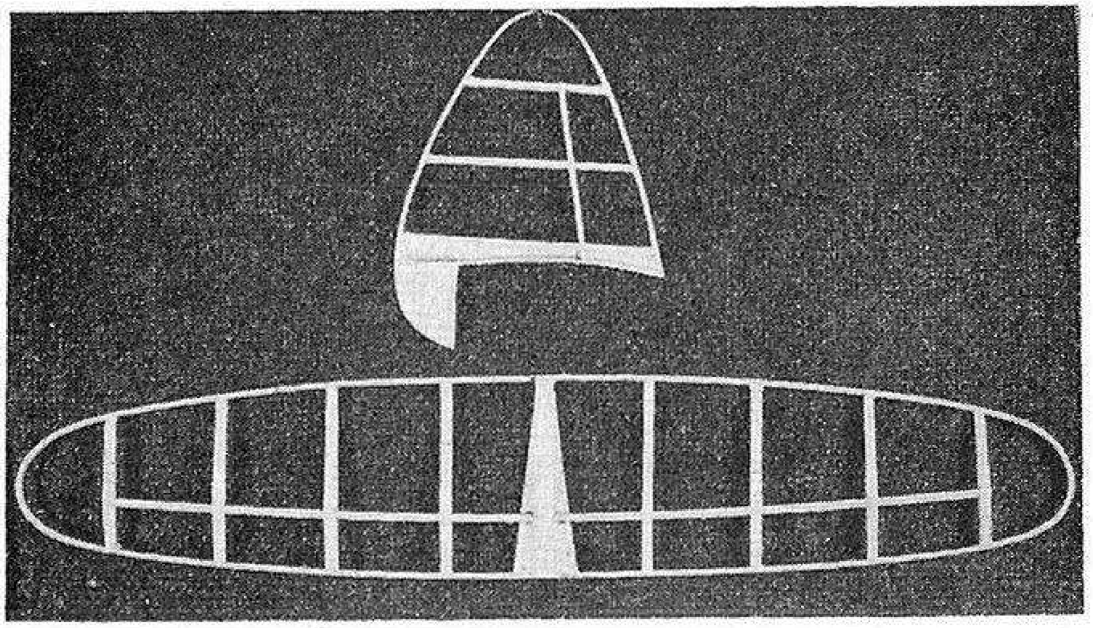

Fig. 171.—Tail and fin ready for covering

completes the wing structure. Two identical wings are required, but they must be, of course, right- and left-handed.

Tail Unit

Though of pleasing shape, there is nothing elaborate about the construction of the tail unit of this machine. As is usual, the tail should be built flat upon a plan drawing pinned down to a building board.

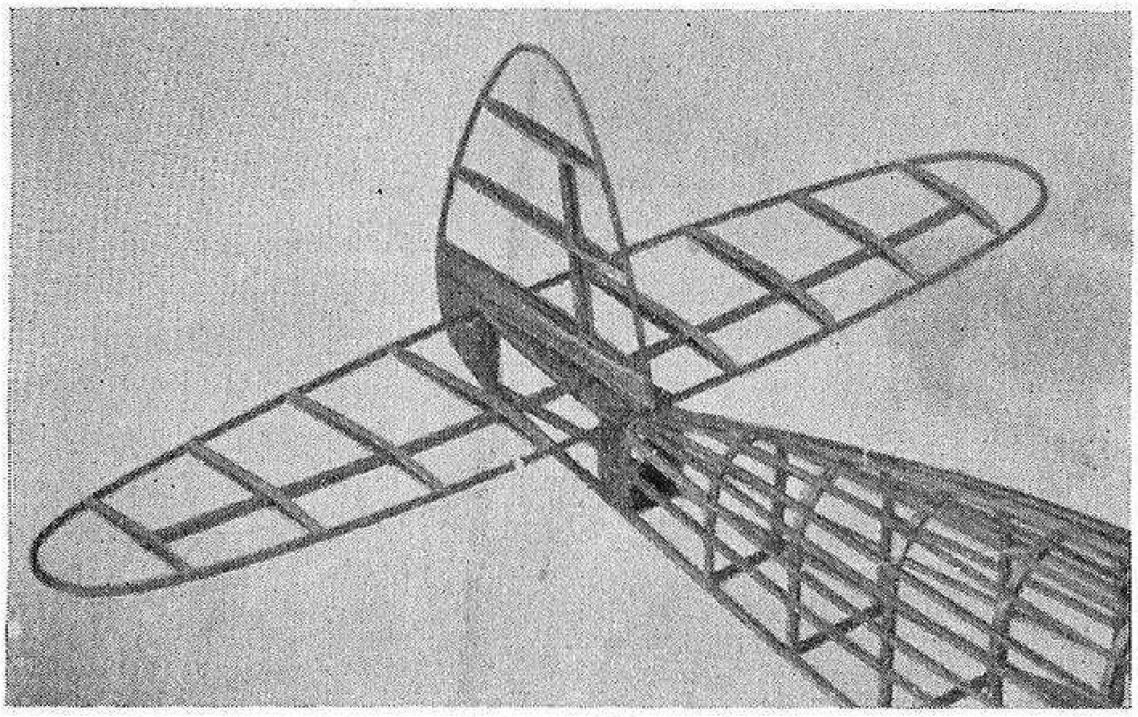

Fig. 172.—The tail unit fixed to the fuselage

Having steamed the edges to the correct shape, they must be pinned down to conform to the tail outline of the drawing. The ribs are formed by two strips of balsa, as may be gathered from the print. When the edging is secured, the lower portions of the ribs should be cemented into their respective positions, when the main spar may be cemented upon them. The sheet balsa centre panel will, of course, have been cemented into place. Now cement in the top strips of the ribs. Upon lifting the structure from the board, it must be carefully sanded with fine glasspaper, and the edges of the tail rounded over. This completes the tail plane.

The fin cannot be built upon the board, as the arrangement will not allow it to lie flat. As before, steam the edging to the shape given; and pin it down to conform to the drawing upon the board, for this first step. This consists in cementing in the strip of sheet balsa which runs from the rear edge to the extremity of the front edge. When the cement is dry, lift the structure from the board.

We may now cement on the bottom rib, which is cut from sheet balsa, so that it conforms to the shaped underpart of the balsa cross-piece. Then add the sheet balsa panel to the underslung portion of the fin.

The structure is now rigid enough for further operations, the first of which is to cement into place the twin fin-uprights. This completed, the remaining ribs are cemented on. They consist of two strips of balsa each, cemented between the edges of the fin, and passing over the upright spar.

On completion of this operation, the tailplane and fin should present the appearance shown in the photograph in Fig. 171.

Undercarriage

This is a most ingenious retracting type, which has been evolved by Mr. S. Collins, of the Northern Heights Model Flying Club. Briefly, it consists of a pair of hinged, wire legs, which carry the wheels. The hinge is constructed from a piece of round, wooden dowel, which turns in a short length of paper tubing. The wire leg is attached to the dowel. The ingenious part of the matter lies in the manner in which the movement of the dowel is retarded within the tube. The legs are connected together by lengths of strong thread and a rubber band, which tends to close them up into the wings. To prevent too fast a movement, however, the turning motion of the dowel is retarded by a strip of sticky tape (such as a piece of fly-paper) which is rolled around the dowel, and interposed between it and the tubing.

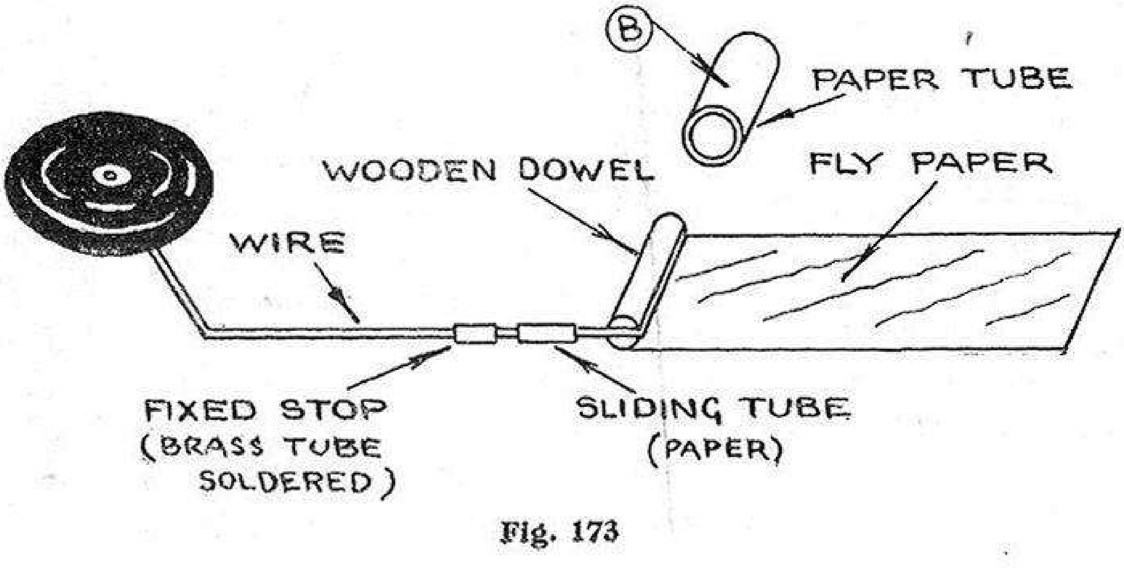

Fig. 173

The illustration in Fig. 168 shows the undercarriage leg assembled, while Fig. 173 shows the arrangement in exploded view. First roll the paper tube (marked (B) in the drawings) and put aside to dry thoroughly, allowing at least 12 hours. Meanwhile prepare the dowel. This consists of a short length of wooden dowel stick which must be about 1/16th inch smaller in diameter than the inside of the paper tube. Along one side and across one face a slot is cut, into which the bent-up end of the wire leg is cemented. Around this dowel is now wound a strip of fly-paper, thus building up the dowel to be a slide fit into the paper tubing. In default of fly-paper, a strip of ordinary paper coated with any sticky substance which will not dry off too quickly may be used. The substance known as "rat varnish," which may be procured from many oilshops, is very suitable. Even such an unlikely substance as cod-liver-oil-and-malt, very slightly diluted with glycerine, has been successfully employed.

Before attaching the wheel, two small tubes are slipped over the wire leg. The outer one is soldered to the leg so that it cannot move, thus forming a stop. The inner tube is, however, allowed to slide along the leg.

We may now glance at the drawing, Fig. 168, of the assembly. It will be seen that a piece of thread is attached to the sliding tube, and from thence passes beneath a pin set into the leading edge and the wooden partition (A). The thread is then connected to a rubber band which links up, in a similar manner, with the thread from the other undercarriage leg.

It will be understood from the foregoing that, when the legs are opened and released, they will be gradually shut together by the pull of the rubber bands. The movement is considerably retarded by the friction of the sticky paper, while, at the same time, the movement is regulated to be slow at first but quickening as the legs become more retracted. This is by virtue of the fact that the pull exerted by the thread is regulated by the varying leverage which the position of the sliding tube upon the leg exerts. At first, the leverage is applied at a very disadvantageous angle, the efficiency of which increases as the tube slides upwards along the leg. In this manner, the movement of the undercarriage leg is very slow for the first few seconds of the take-off, being retarded sufficiently long to enable the machine to take-off from the ground. When in the air, however, the retraction of the legs speeds up, until, after about twenty seconds, the legs are fully concealed. The speed of the retraction may be regulated by the strength of the rubber band used to pull the legs together.

Covering

The whole machine is covered with light-weight tissue paper, which should be water-sprayed and given one coat of No. 2 banana oil. It is recommended that the wings be covered in white tissue, but that the fuselage be covered in black or some dark colour. In this way, the machine is easily visible under all conditions when in the air.

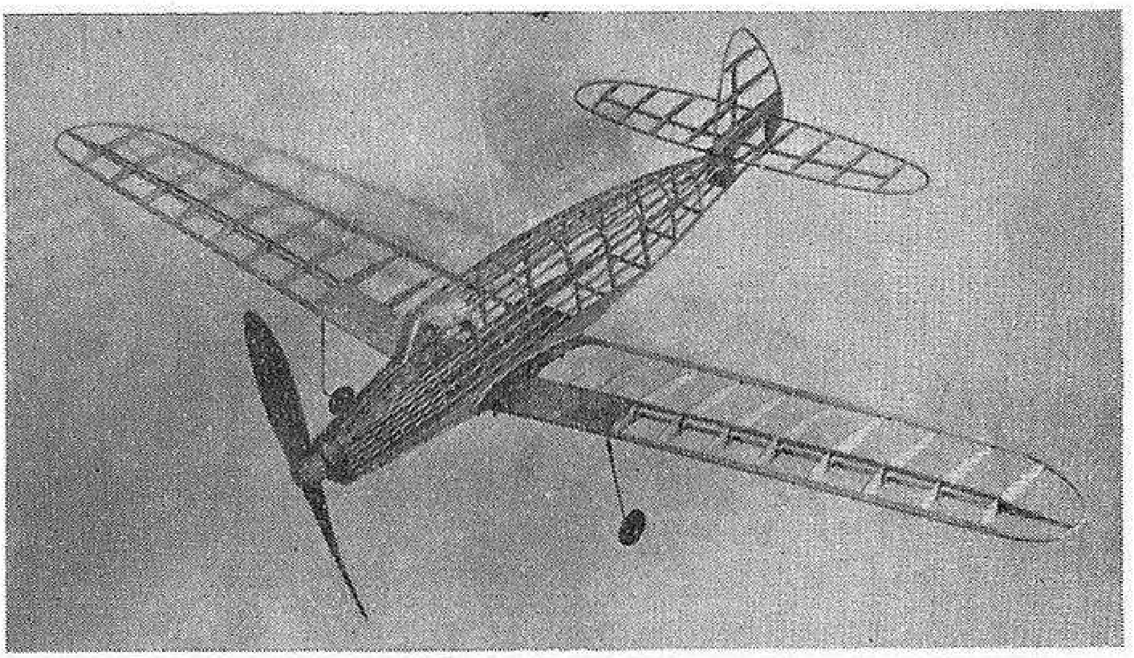

Fig. 174.—The completed framework of the machine

Airscrew and Motor

A propeller of 9 inches diameter and 12 inches pitch is suitable for this model. A motor consisting of four strands of 3/16 inch × 30 rubber, looped into a skein of 30 inches in length, is used. It is recommended that this skein be tensioned by the Lance system of prewind, as detailed in the chapter on rubber motors.

CHAPTER XVII

THE "TWENTY-MINUTE GLIDER"

(Holder of British Model Glider Record and Winner of "The Model Engineer No. 1 Cup")

Very little introduction should be necessary for this machine, as it is one of the best known gliders which have yet been built. This is hardly to be wondered at when one considers that the machine holds the British Model Glider Record, with a flight of 20 minutes 7 seconds. In addition, it is the winner of the "Model Engineer Cup No. 1" for this class of machine, and has performed well and consistently on all occasions.

. . Designed by Mr. E. Chasteneuf, of the Blackheath Model Flying Club, the glider is representative of some of the latest practice in this branch of aeronautics; yet it is by no means over-complicated, and its building may be successfully undertaken by even the inexperienced. If built to the specification, and flown by the methods outlined in Chapter XII, the builder will be well rewarded for his pains.

Fuselage

Full-sized blueprints of the machine are now obtainable, and must be procured. The fuselage is of the multi-stringer type, built upon balsa formers, and is well shown in the accompanying photographs. In order that the fuselage may be built truly in line, the formers are strung upon a length of ¼ inch round wooden dowelstick and for this purpose ¼-inch holes are cut into the centres of the formers. Formers up to, and including, No. 9 have the whole centres cut out. From this point to the rear of the machine the formers are left solid. When the centres of the first formers have been cut out and detached, they must be replaced, and lightly

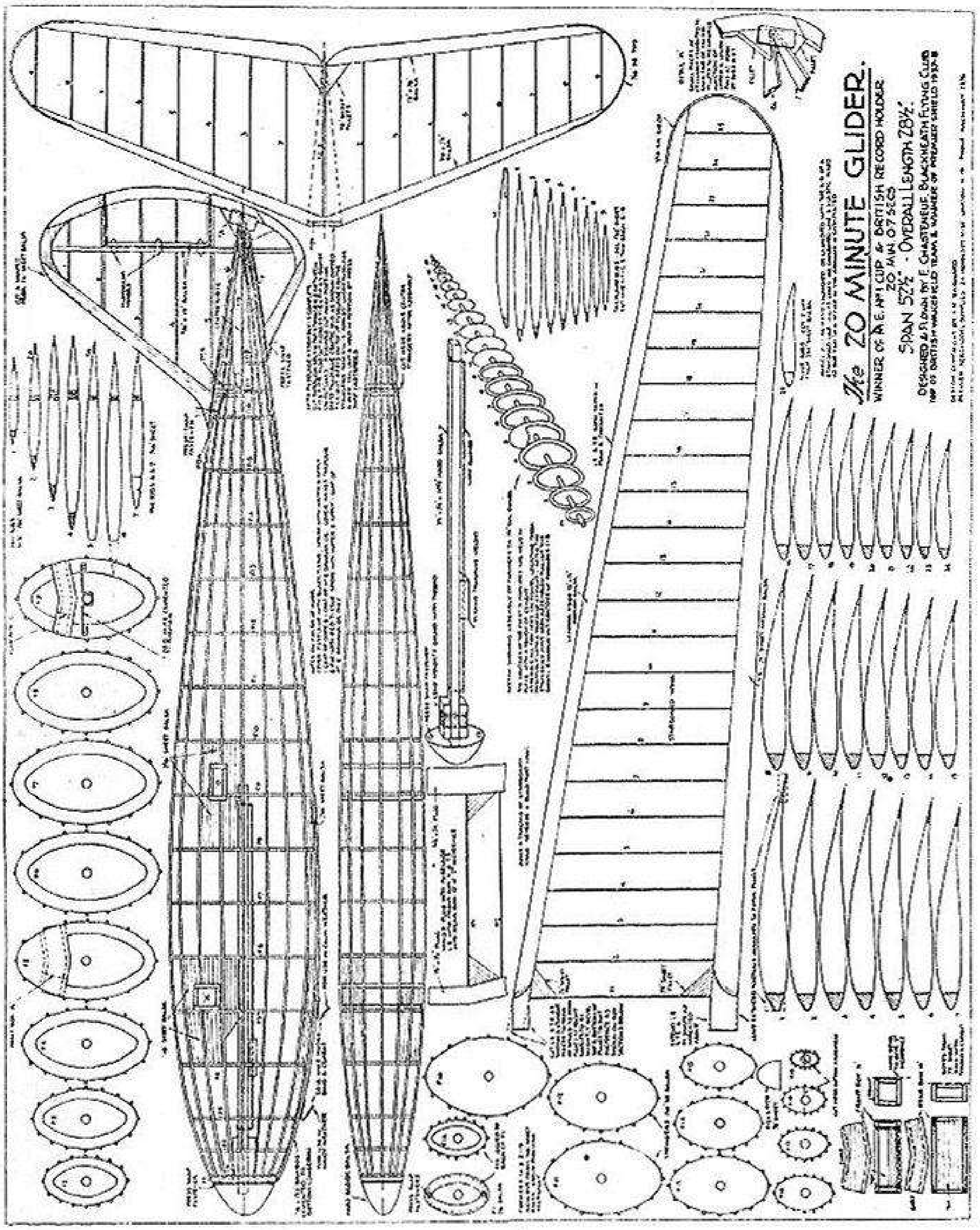
The 20 MINUTE GLIDER.
WINNER OF M.E. Nº1 CUP & BRITISH RECORD HOLDER
20 MIN 07 SEC
SPAN 52½" · OVERALL LENGTH 28½".
DESIGNED & FLOWN BY F. CHASTENEUF, BLACKHEATH FLYING CLUB
MEMBER OF BRITISH WAKEFIELD TEAM & WINNER OF PREMIER SHIELD 1933-8

Fig. 175

secured with a touch of cement here and there. On completing the building of the fuselage, these centres must be pushed out to enable the fuselage to be withdrawn from the building rod; hence the need for *light* cementing. The positions of the stringers must be correctly marked upon the edges of the formers, as the line-up of the fuselage depends upon the accuracy of these markings.

To facilitate the building of the fuselage, it is desirable that a building jig be constructed, somewhat on the lines of the one shown in Fig. 177. This is made from 1½ inch × 1 inch deal, and consists of a pair of uprights nailed to a long base strip. The tops of the uprights have "V" nicks cut into them, in which the dowelstick is free to rotate. If desired, the base of the jig may be cut into halves, so that it may be adjusted to length by nailing a piece of similar wood to the bottom. Two cross struts act as feet, and the uprights are braced by large corner blocks.

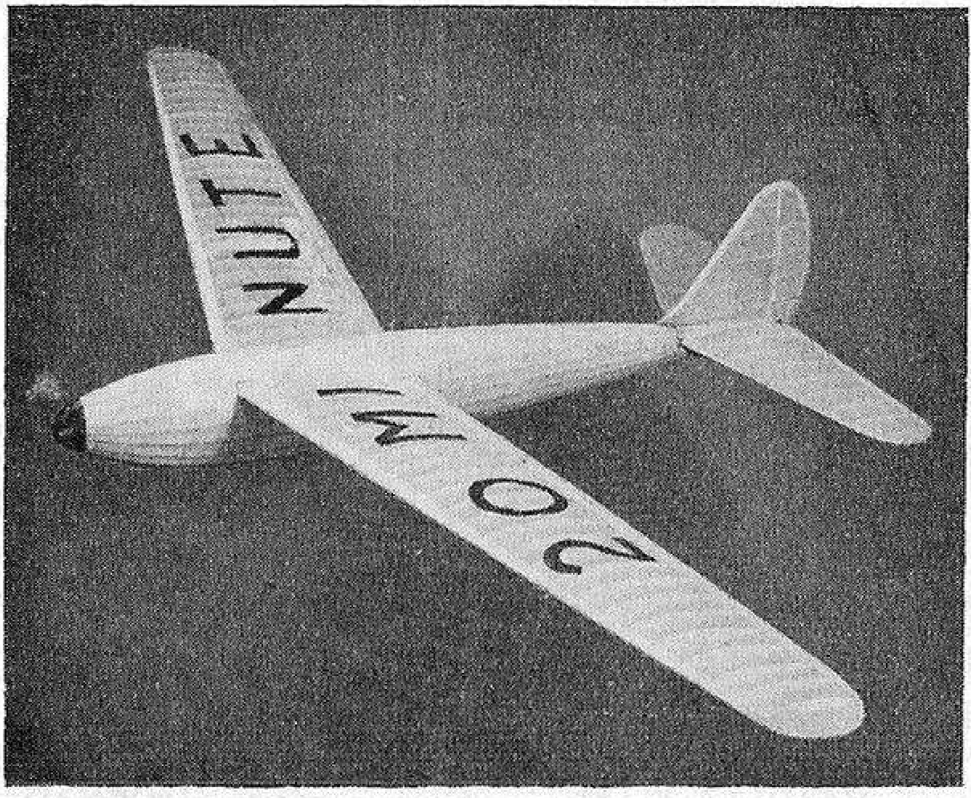

Fig. 176.—The "Twenty-Minute Glider": holder of the British Glider Record (model)

This picture also shows the first steps in construction. First, mark the positions of the formers upon the building dowel, and thread them on to it; check that they are "square" in all directions with a setsquare. The formers may be lightly cemented to the dowel, or secured with pins if they, by mishap, are too loose a fit. It is essential to get the stringer marks on the formers in line when on the dowelstick; otherwise the stringers will not lie in a straight line from front to rear, when assembled. It will be seen

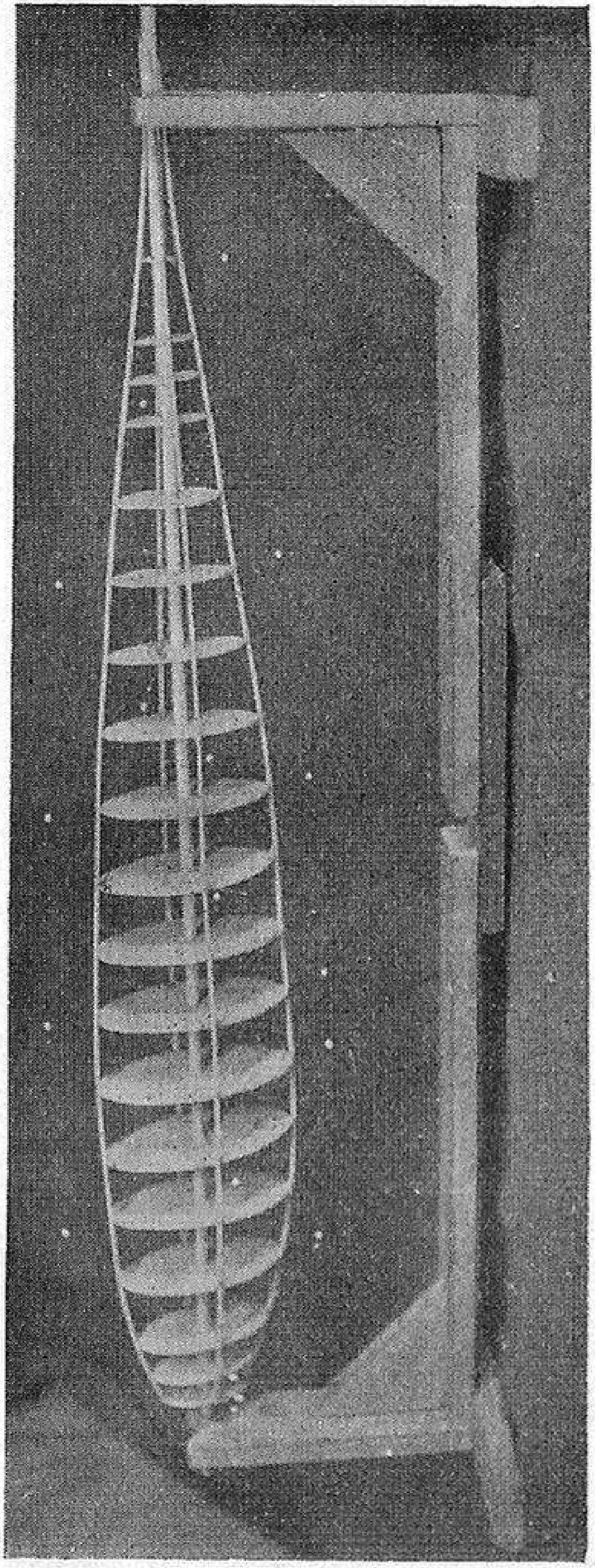

Fig. 177.—First steps in fuselage construction

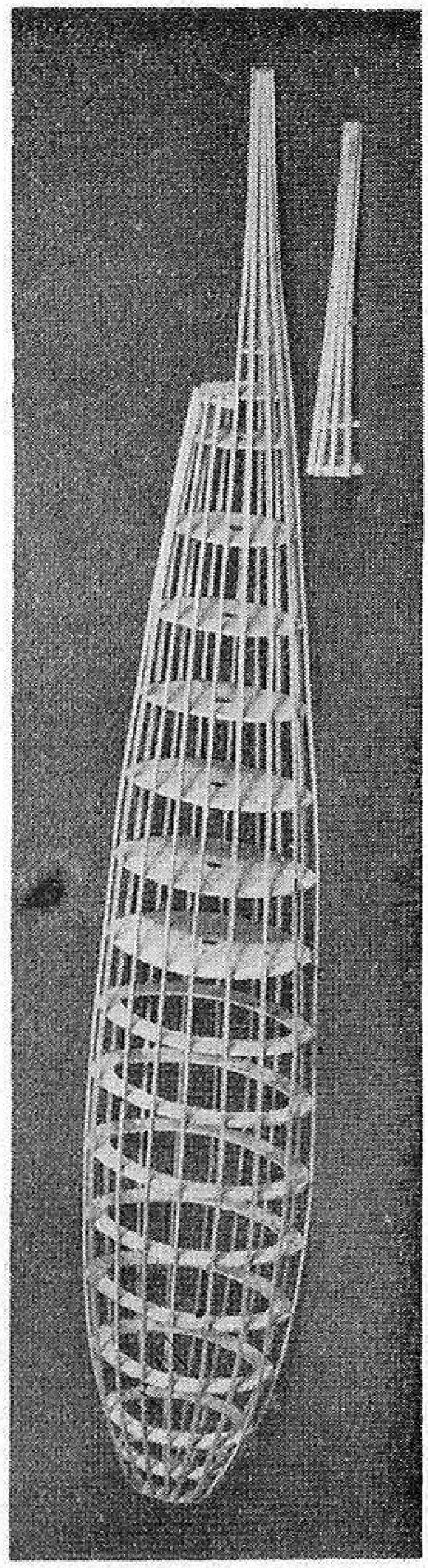

Fig. 178.—Partly-finished fuselage, showing detached tail portion

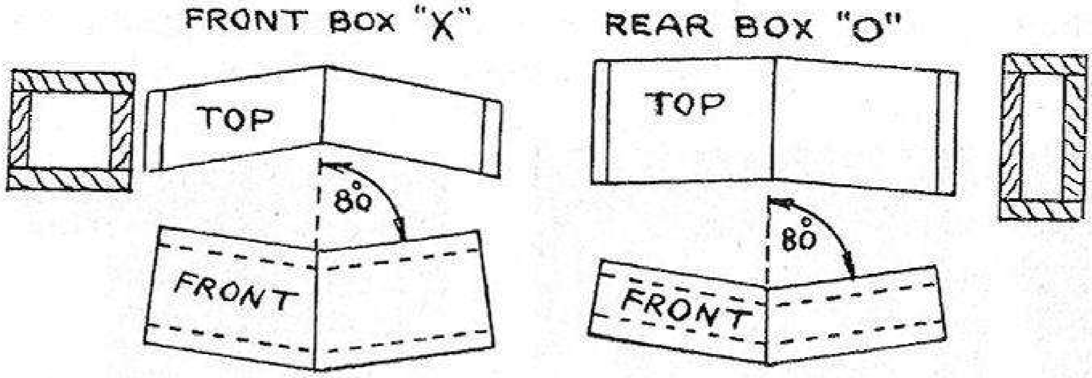

Fig. 179

that the four main stringers have been cemented on, and when the cement is set the structure will be firm enough to stand further manipulation.

The application of the remaining stringers brings us to the point where the structure may be removed from the rod. When free, the stringers must be cut to length, and drawn together at the rear and cemented. The fin of the glider is fixed to a small piece of the fuselage, which is detached from the extreme end, and this portion may now be removed. Figure 178 shows the fuselage at this stage, while a glance at the blueprint will make the matter clear. The construction is such that, upon cutting through the appropriate stringers, the cement may be loosened with a razor blade, and the top of the fuselage end removed. Fig. 178 also shows very well the manner in which the front formers are cut out, while the rear ones are left solid.

Wing fixing is by means of dowels, formed by an extension of the leading and trailing edges of the wings, which plug into boxes cemented within the fuselage. The construction

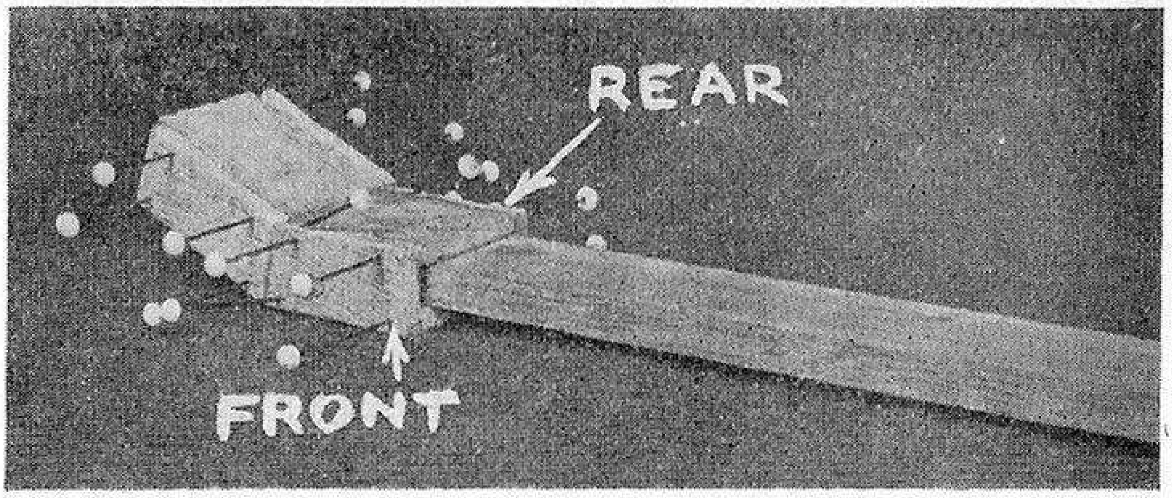

Fig. 180.—Method of making wing-fixing boxes

and placing of these boxes calls for some care, as the dihedral angle of the wings depends upon them. As the wings of the machine are also swept back, some provision for this must be made. The drawing, Fig. 179, amplifies the drawings of

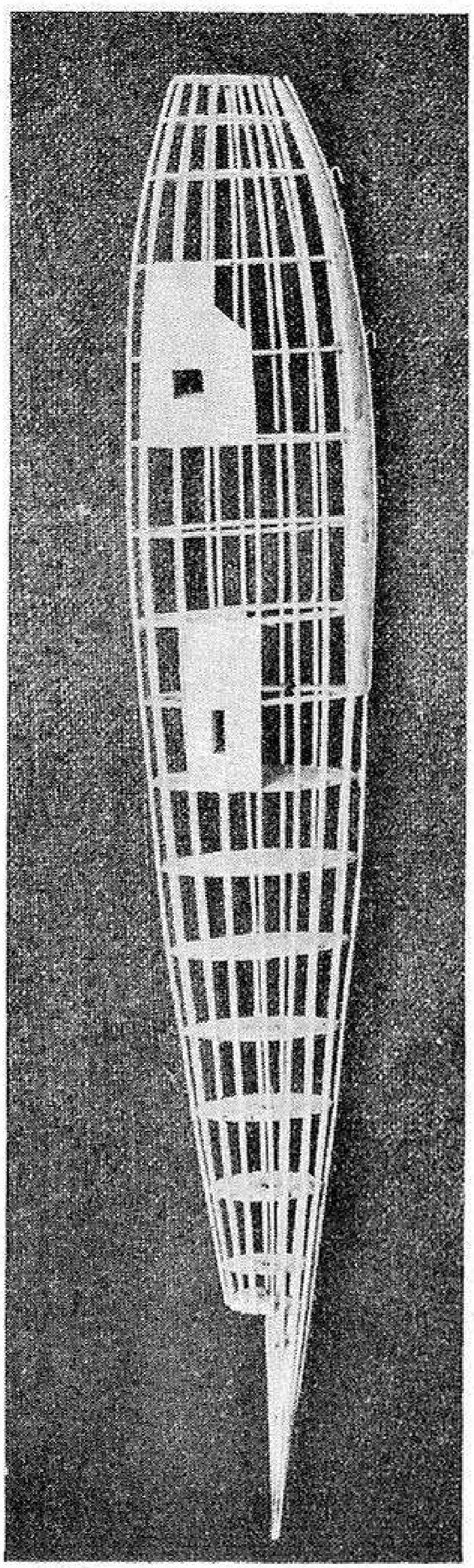

Fig. 181.—The finished fuselage structure

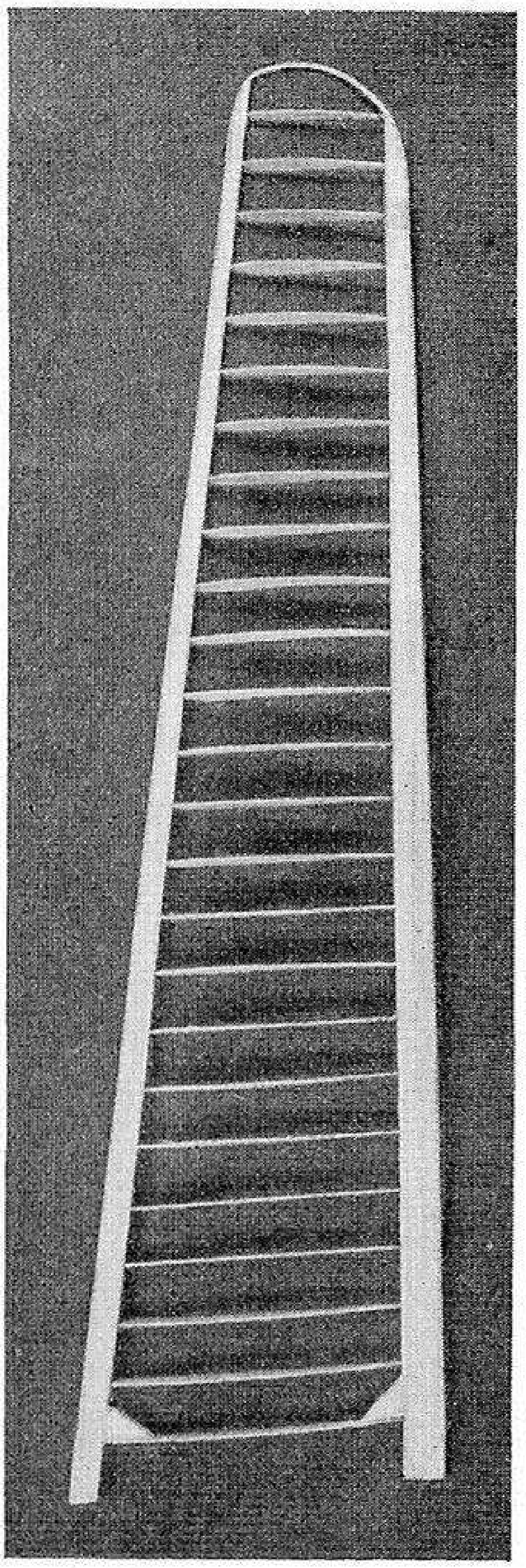

Fig. 182—The finished wing framework

the wing boxes as shown on the print, and should make the construction plain.

The best method of making these boxes is to cut the front and rear pieces to the angles shown in Fig. 179. These are marked "Front" and "Rear" in the picture in Fig. 180. It will be seen that the front consists of two pieces of balsa, and that the rear piece is likewise divided. This is to accommodate the sweep-back of the wing. Now, cut the top and bottom portions of the box, again in two pieces each (to allow for dihedral angle). Next, cement the sides to the bottom, and cement the two halves together, but leaving the tops of the boxes open.

Dealing with the front box first; take a piece of the wood which will be used for the leading edge of wing, and place one end within the open box. Taking now the top piece of the box, cement this into place, pressing it down tightly upon the leading edge spar, and securing it with pins. Now, withdraw the leading edge, and allow the cement to set, proceeding, meanwhile, with the other side of the box in a similar manner. The process is depicted in Fig. 180, which shows the leading edge ready to be withdrawn. In this manner the boxes will be a nice fit on the spars when the wings are finally located. As the boxes carry the whole load of the wings they are strengthened with a binding of thread and cemented all over.

The next step is of high importance, being the cementing of the wing boxes within the fuselage. When the fuselage formers are being prepared you will, of course, have marked out the position of the wing-boxes on formers Nos. 5 and 9, in accord with the blueprint instructions. It will be necessary to cut away parts of certain fuselage stringers, and also part of former No. 9, to allow the entry of the boxes. Care will be required to ensure that the boxes are cemented into exactly the position shown on the print, and that they are at right-angles to the vertical axis of the fuselage, and also in line with each other when viewed from the top of the fuselage.

The best way to ascertain that the boxes are correctly placed is to plug short pieces of the leading edge of the wing into the front boxes, and similar pieces of the trailing edge into the rear boxes. With these in situation it is an easy matter to view the manner in which they protrude from the fuselage sides; thus indicating the positions that the wing edges will assume, when the complete wings are later plugged into the boxes. While the cement is still tacky, the protruding spars may be lined up by eye, thus adjusting the boxes within the fuselage. When all is satisfactory, the boxes may be secured to the formers with pins and left to set. With the addition of the balsa panelling which surrounds the wing boxes, and that which reinforces the belly of the fuselage and the binding-on of the towing hooks, the fuselage structure is complete.

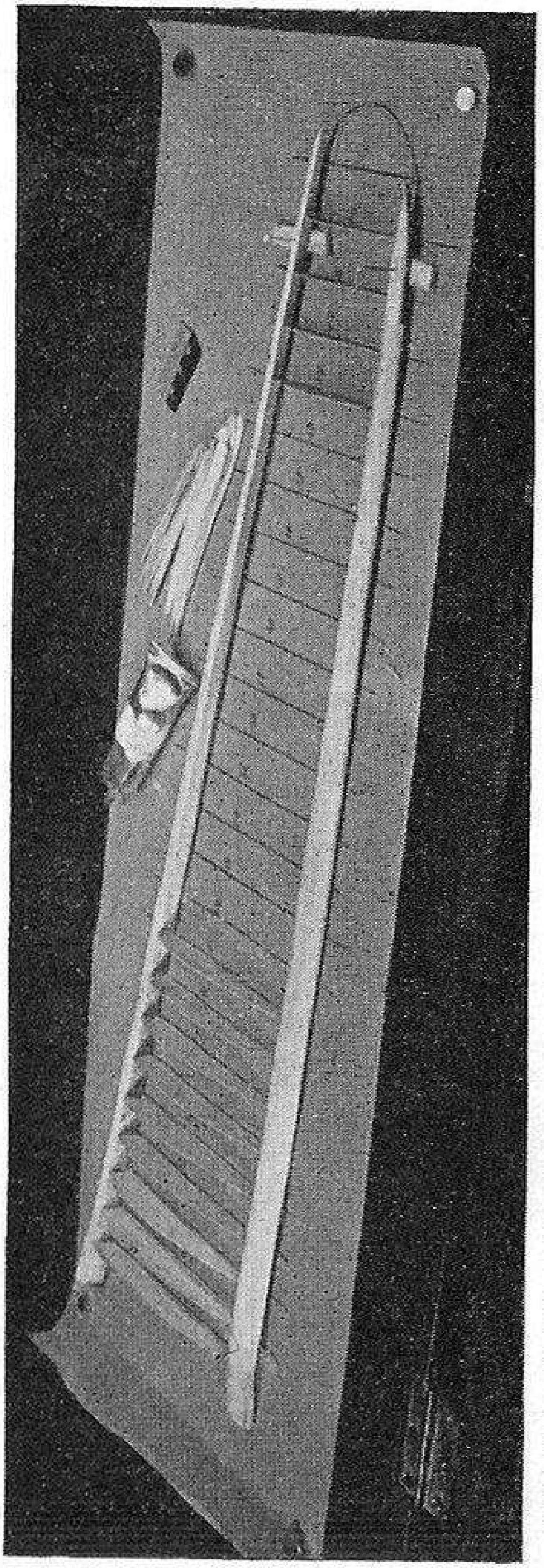

Fig. 183.—Building the wings. Note that each rib is being cut to the required length as the work proceeds

Wings

Success in the making of the wings for the glider lies principally in the shaping of the leading and trailing edges. They are of stout balsa, and tapered in both plan and thickness towards the tips; thus the whole character of the wings may be spoiled by clumsy or uneven tapering of the edges. Fig. 182 shows one of the finished wing frameworks, wherein the tapers are well pictured.

The first step will be, therefore, to shape the leading and trailing edges of the wings in accordance with the measurements shown on the print. We may get a guide as to the correct taper of the thickness of the spars from the sizes of the noses of the ribs. In shaping balsa such as we are now dealing with, few tools are so successful as a sharp pocket knife and some pieces of glasspaper in various grades. Always cut the wood with the grain, as the greatest danger lies in attempting to cut the balsa against the grain, thus causing the knife blade to "run-in" below the required depth.

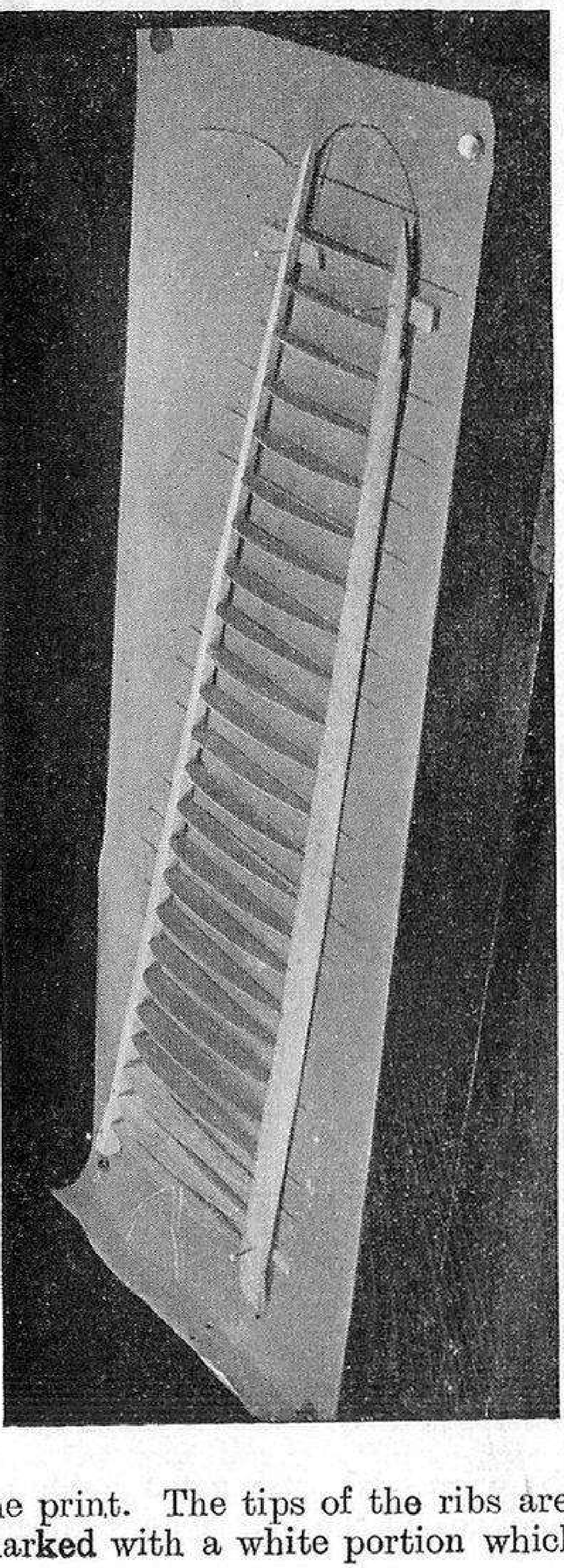

Fig. 184.—Wing framework ready for removal from the board so that the wing tips may be cemented in

Cutting the ribs is a tedious business, especially as there are fifty of them to do. The shape of each rib is given on the print, and there seems no alternative but to trace the outline of each rib upon tracing paper, transfer it to the balsa, and cut and sand to the exact shape given. The wing section used is the "Eiffel 400," a most efficient section, but one which depends upon a close following of its subtle curves, especially on the undersurface, for its satisfactory performance. Great care should therefore be taken to cut the ribs to the exact shape given on the print. The tips of the ribs are shown, on the drawing, marked with a white portion which indicates the section of the trailing and leading edges, but in cutting the ribs this should be ignored, and the ribs cut to their full lengths.

Figure 183 shows the first steps in building. As the bottoms of the "Eiffel 400" ribs protrude below the leading and trailing edges, it is not possible to pin these directly down upon the building board. It will be necessary, therefore, to jack up the wing edges upon small pieces of 1/8 inch balsa, as may be seen in the photograph. It will be as well to check that the distance between the leading and trailing edges of the wing correspond to the distance between the wing sockets in the fuselage. If you have followed the drawing fairly closely, the difference should be very small, so that the distances between the edges may be adjusted to correspond, without upsetting the wing design to any great amount.

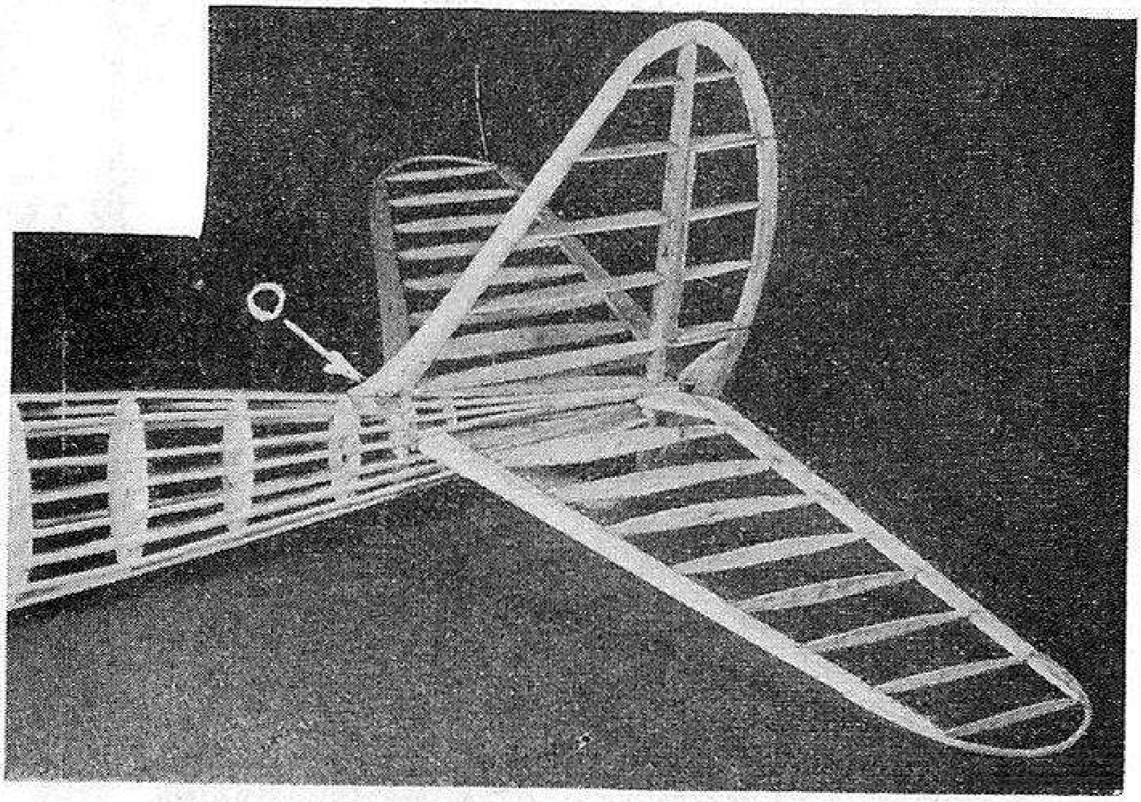

Fig. 185.—The complete tail unit mounted on the fuselage

In the picture some of the ribs have already been cemented into place, and it will be seen that the ribs are being cut to the correct lengths as the work proceeds. In Fig. 184, the wing ribs have all been cemented in, and the wing is ready for removal in readiness for cementing the wing tips into the recesses prepared for them. As advocated elsewhere in this book, it is as well to steam the two wing tips together, by binding with cotton, and manipulating in the steam from a

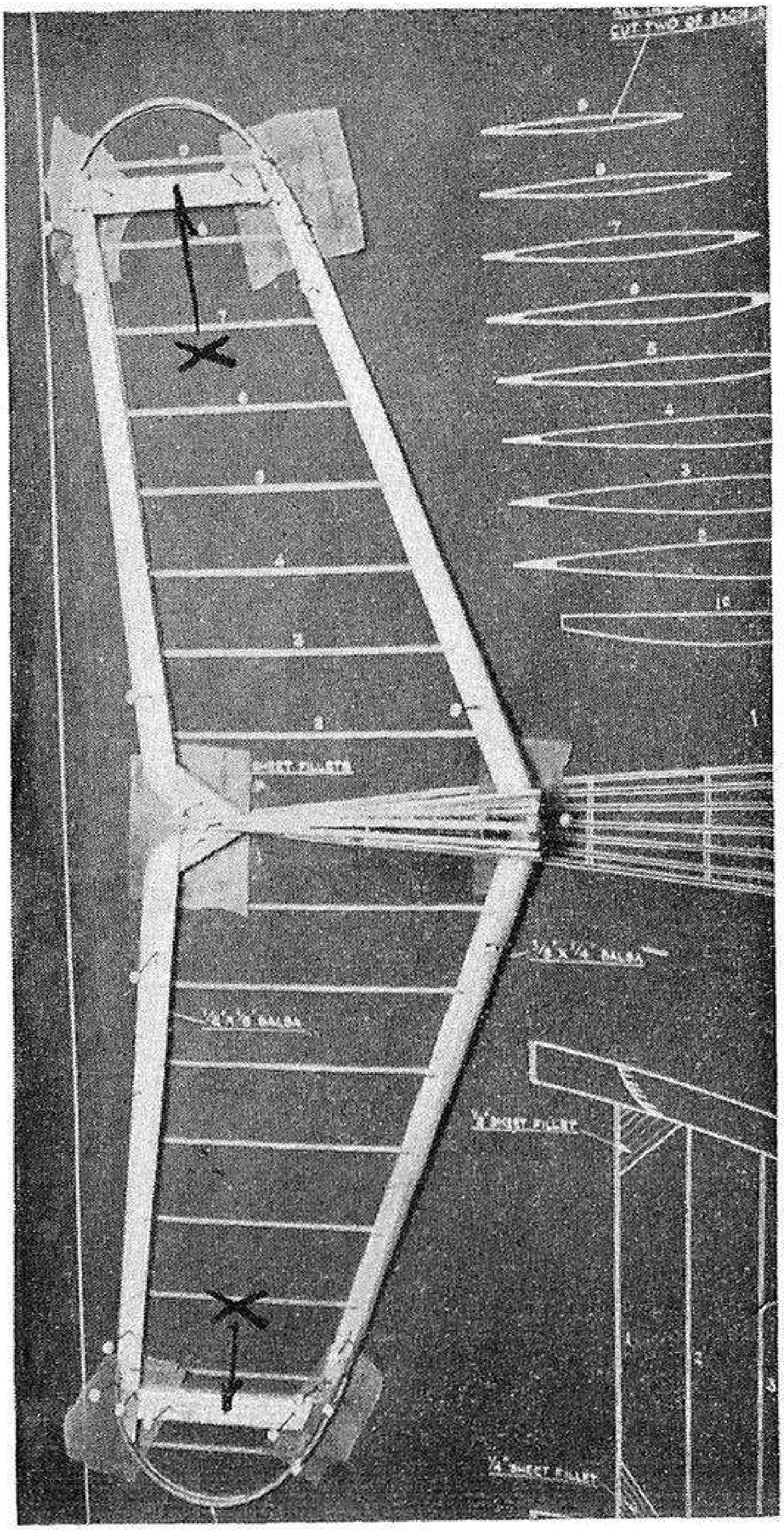

Fig. 186.—First steps in tail construction

boiling kettle. In this way we may ensure conformity between the two wing tips.

This completes the main wing structure, and, after cementing in the small corner blocks, the wing may be tried for fit within the sockets of the fuselage. It is improbable that the fit will be satisfactory at the first attempt, so the ends of the wing spars may be carefully sanded until the wings fit easily but firmly into the sockets. Should the fit not be perfect, the wing will be distorted when in position. This is a serious fault, and there is no way to remove it except by fitting the wings perfectly to the fuselage.

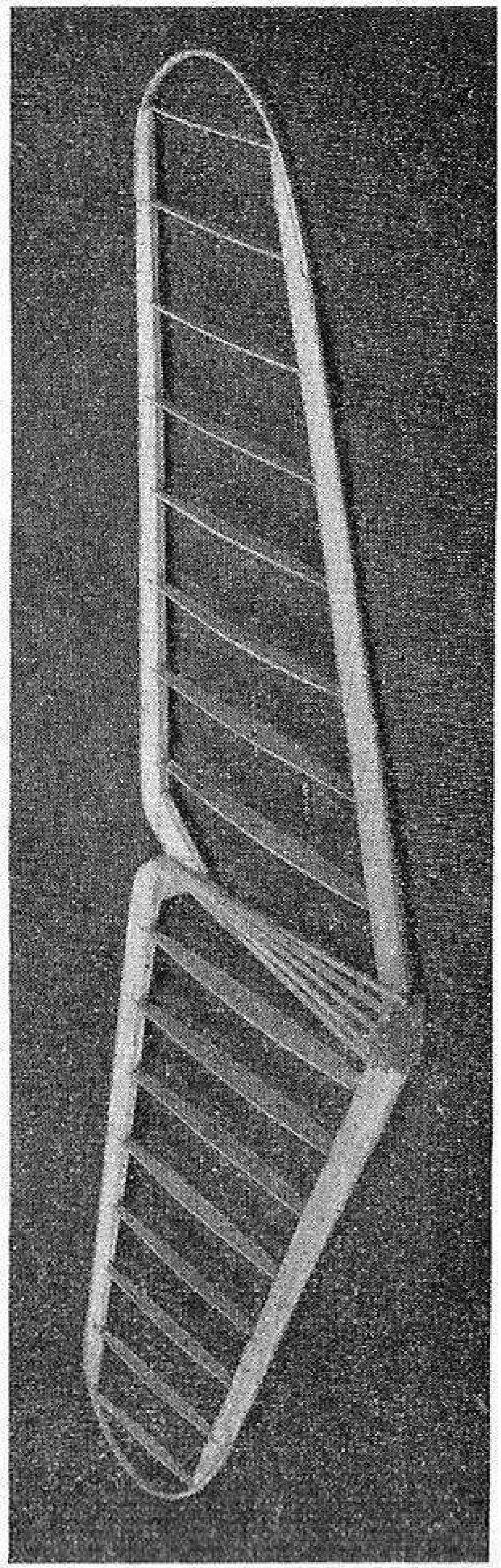

Fig. 187.—Completed tail-plane framework

Tail Unit

A similar method of construction for the tail plane to that detailed for the wings is used; that is, no main spars are incorporated, the strength being obtained by the use of sturdy leading and trailing edges. An idea of the finished assembly may be had from Fig. 185, which shows the tail assembly attached to the machine.

As before, the first step is to shape the leading edges from balsa. These edges are again tapered, and are rounded off on the front edge, as many of the pictures will show. Next, the remaining framework of the fin should be cut to the shape shown in the print, and then, together with the leading edge, pinned on to a tracing of the plane, upon a building board. The photograph, Fig. 186, shows the framework thus shaped and pinned down. Across the centre is now cemented the detached portion of the fuselage, while at the ends may be seen two pieces of 1/16 inch balsa marked (X), (X). These two pieces of balsa are not actually part of the construction, but serve only as supporting pieces. They are not, therefore, shown in the blueprint. Their purpose is to hold the framework rigid while the ribs are being cemented in, as the framework must be removed from the board for this operation. Cut the ribs to their full length, and trim them to fit the job as you go. It is a good plan to make small nicks in the leading and trailing edges, so that the ribs just register into them while being cemented.

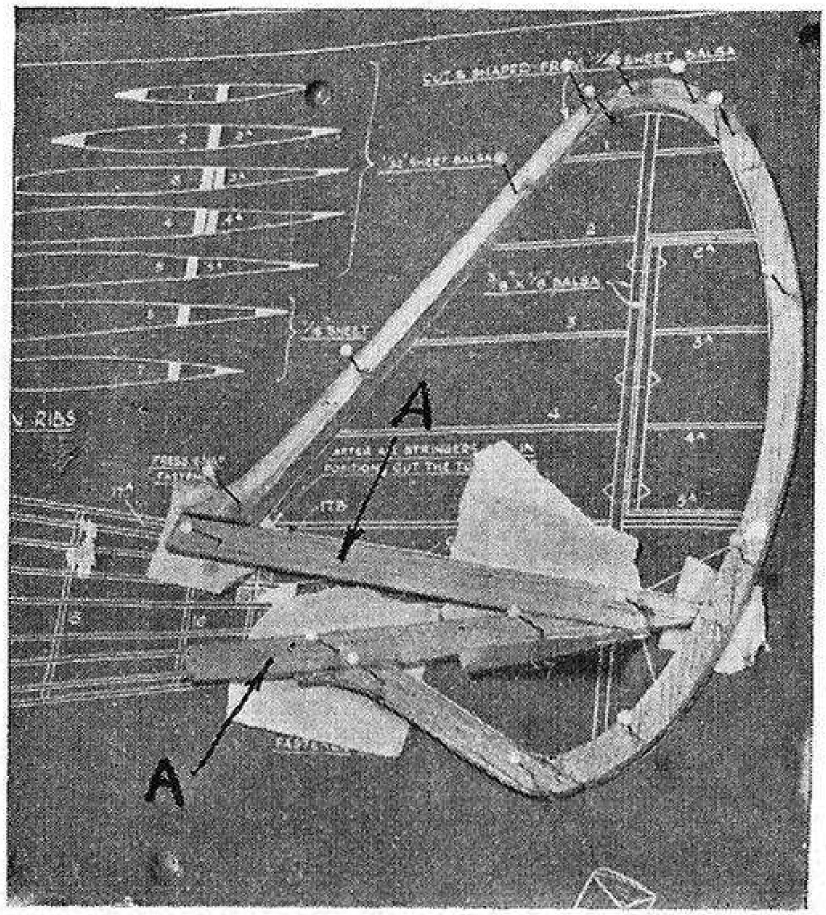

Fig. 188.—First steps in fin construction

The tips are steamed to shape from 1/16th inch square section birch, and, as before advocated, two lengths of the wood should be bound together with cotton and steamed in one operation. When the tips are cemented in, the supporting pieces (X) are removed, when the structure should appear as shown in Fig. 187.

The fin has a framework of balsa, cut to shape and pieced together, with a leading edge shaped from ¼ inch sheet balsa. The picture, Fig. 188, shows the framework thus shaped, and pinned down to the drawing. In this picture two pieces

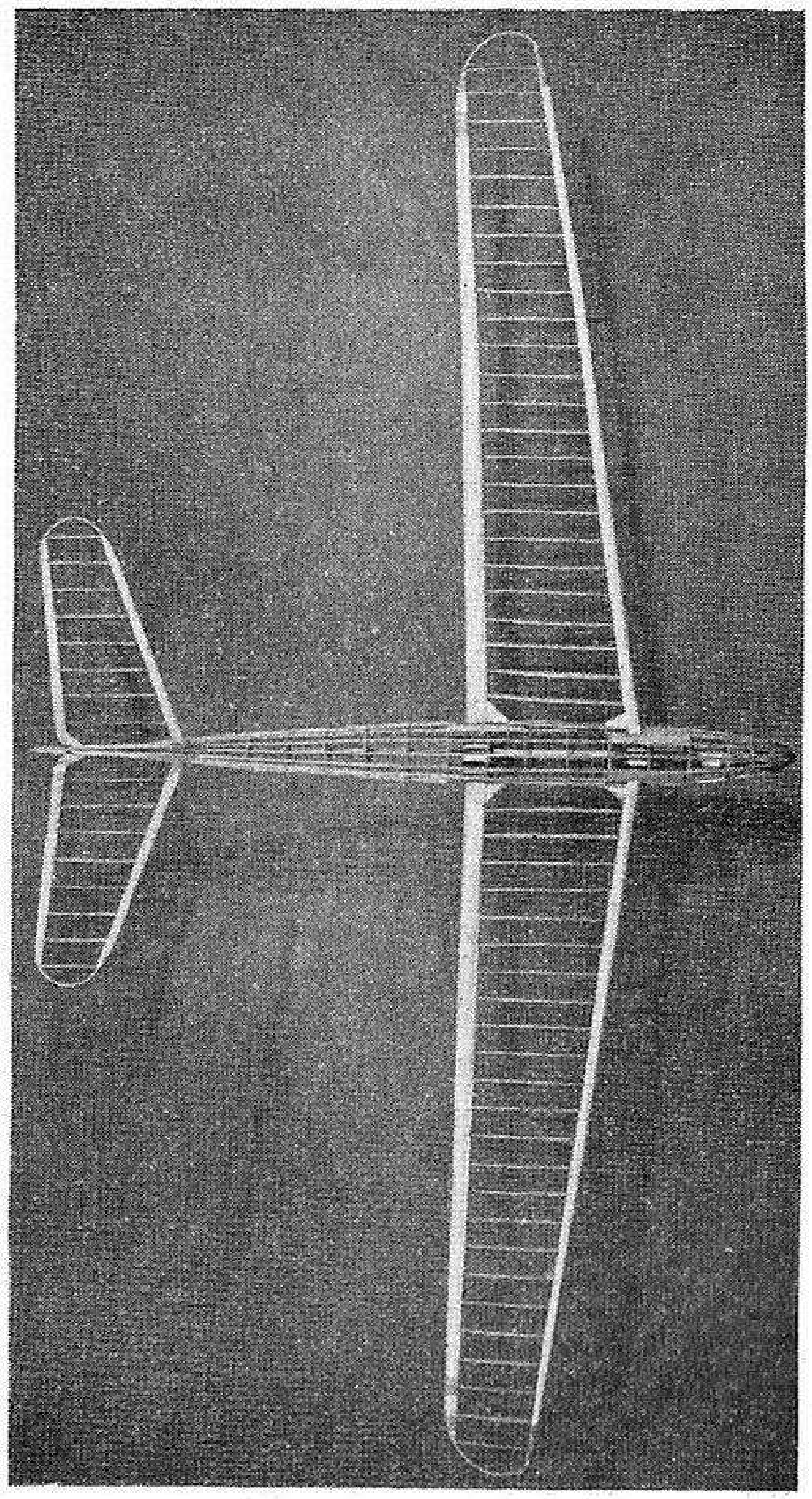

Fig. 189.—The framework of the glider ready for the covering

of balsa, marked (A), (A), may be seen. These, again, are not part of the actual structure, but are cemented in as supporting pieces during the fin construction. They are, of course, removed when the ribs have been cemented into place. They are removed by loosening the cement with a razor blade. Ribs Nos. 1 to 5 should now be cut from 1/32 inch sheet balsa; ribs Nos. 6 and 7 are of 1/16 inch sheet. Their shapes are obtained from the blueprint, and they may be seen in the top left-hand corner of the photograph. The parts shown in white indicate the portions which will be removed to make room for the edges and spars of the fin, but it is advisable to cut the ribs as a whole, and to divide them later.

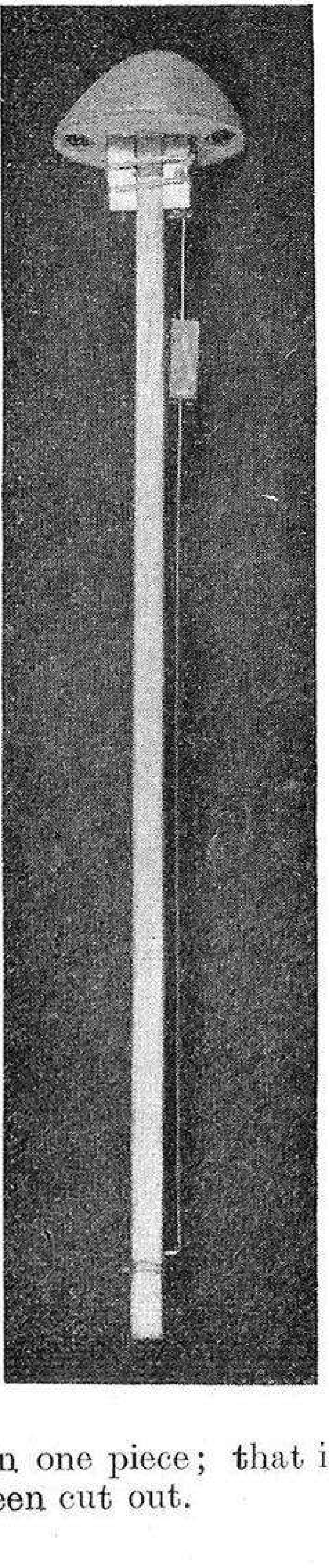
Fig. 190.—Noseblock with leaden trimming weights in position

The framework, as shown in Fig. 188, should be removed from the print, and rib No. 6 cemented in. Now cement in rib No. 7 and the main spar. The other ribs may now be cemented in, dividing each rib and cutting it to length to the actual job. Half ribs, marked 2a and 5a, will now be cut, together with a short spar forming the inner edge of the trimmer. This trimmer spar should be lightly cemented to the main spar in a couple of places, and the trimmer ribs cemented into place. It will be noted from the picture that the rear edge of the fin has been left in one piece; that is, the portion for the trimmer has not been cut out.

After cementing in the corner blocks at the apex of the "V" opening, and also the plywood stiffening pieces, the pieces of wood marked (A), (A) should be carefully detached and removed. Now cut through the rear edge of the fin, thus freeing the trimmer. The trimmer is now hinged within the fin upon small strips of aluminium, which are cemented

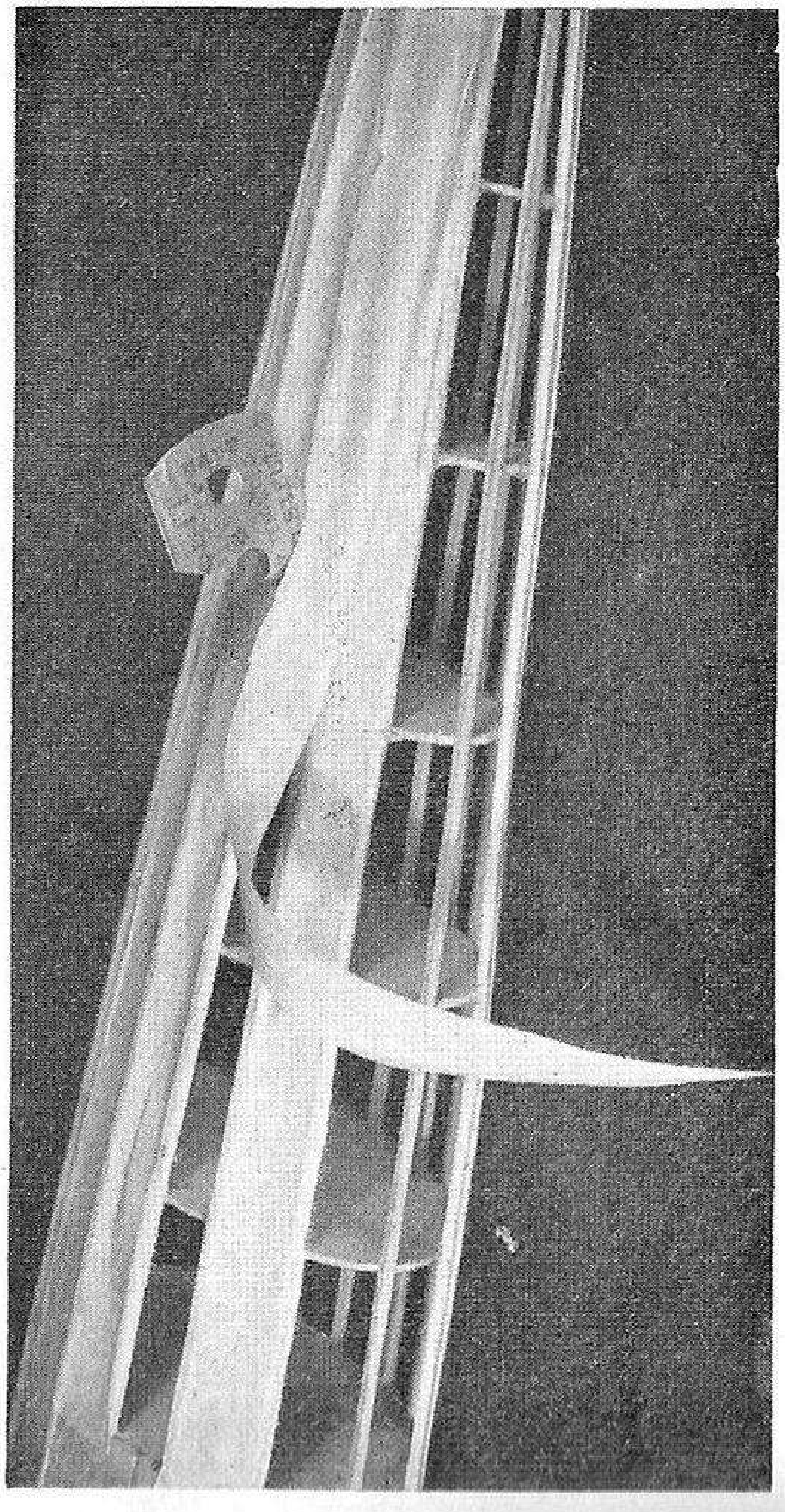

Fig. 191.—Showing the method of covering stringer fuselages

into slots which are pierced with a broken razor blade. This process completes the fin structure.

The fin and tail unit are attached to the fuselage by means of press-stud fasteners, which are cemented to the fin and fuselage. One of these studs may be seen at (O) in Fig. 185. It will be necessary to recess them into the wood, so that a snug fit will result when the parts are clipped together.

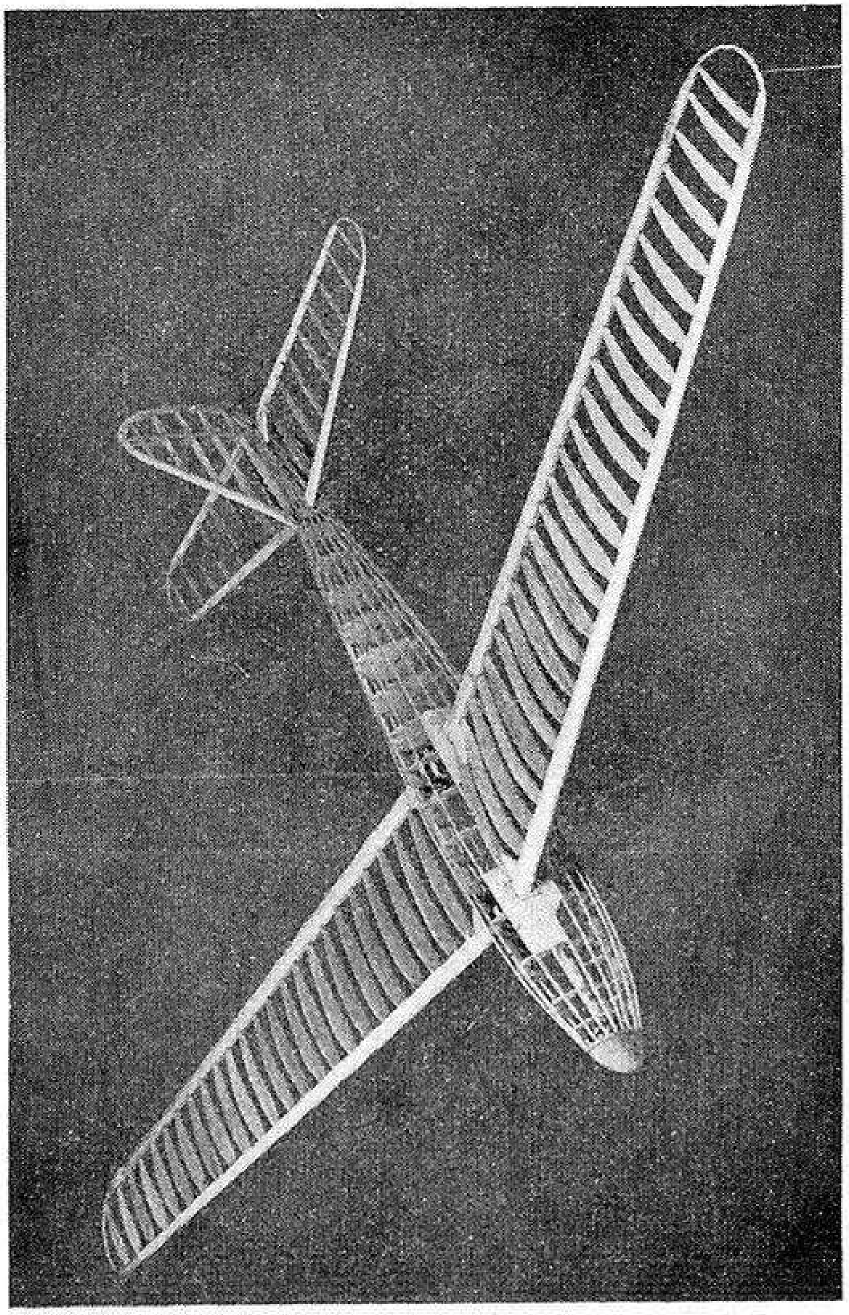

Fig. 192.—Complete framework of the "Twenty-minute Glider"

Noseblock, etc.

A system, which consists of a sliding weight which adjusts along a balsa dowel fixed into the noseblock, is used to obtain trim of the glider. The blueprints give full details of the contrivance, while the photograph, Fig. 190, shows the completed assembly. The noseblock itself is of hard, block balsa, which should be roughly cut to shape and finally sanded to a contour which will carry on the lines of the fuselage at the front end. Into this noseblock a length of ¼ inch × ¼ inch hard balsa is cemented, and a length of 16 S.W.G. piano wire, bent up at the ends, is affixed along the underside. Two leaden weights are bound to the spar close up to the noseblock, while a third weight, drilled through the centre, is threaded along the wire in such a manner that it is free to slide backwards and forwards.

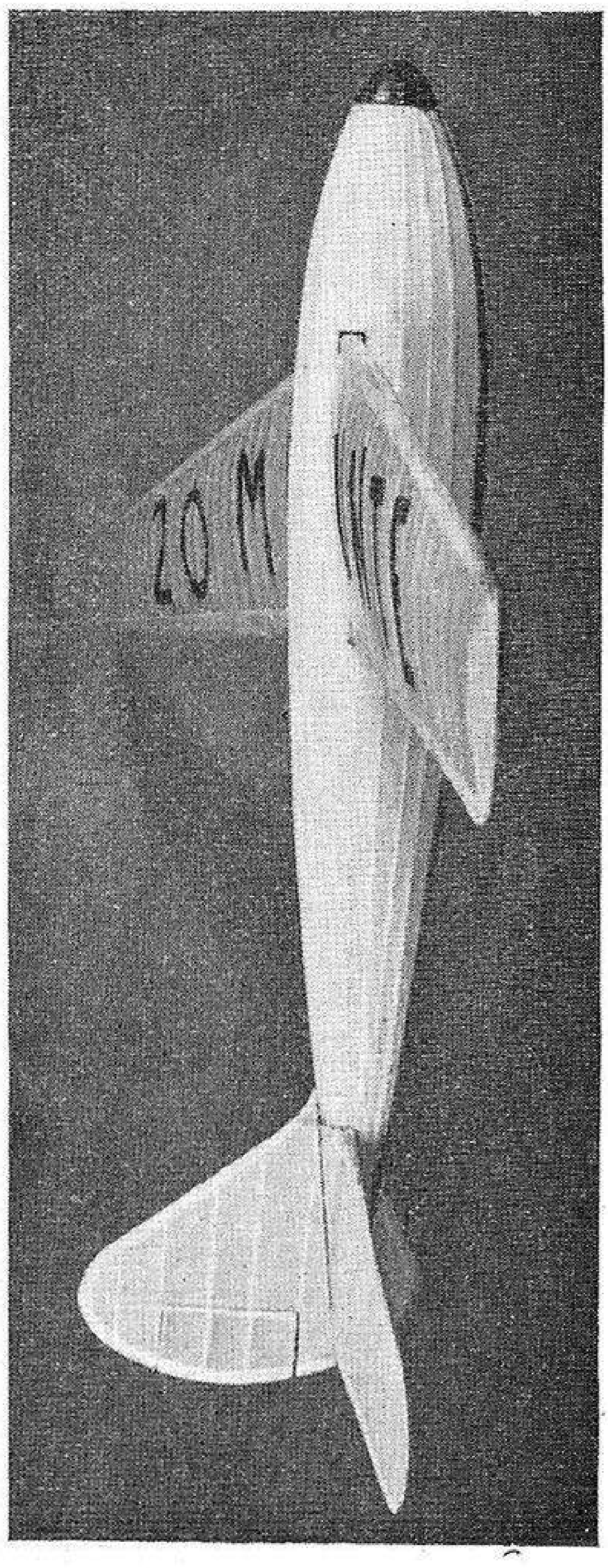

Fig. 193.—Side view of the "Twenty-minute Glider"

The noseblock is secured to the fuselage by two small snap-fasteners which are cemented to the inside face of the noseblock and to the nose of the fuselage. When snapped into position, the rear end of the spar locates into the wire framework which is cemented across former No. 9.

On completing this trimming device, the whole framework of the glider is ready for covering. It is shown in this stage in Fig. 189.

Finishing

The original glider, which holds the British Model Glider Record, was finished with the fuselage in black and the wings and tail in red tissue, but any forms of contrasting colours may be employed. It is advisable to have one of these colours on the dark side, as this enables one to keep the machine in view should it glide away on the thermal air currents.

Experience seems to show that the best way to cover stringer fuselages of this type is to cover each bay, between the longerons, separately. It is possible to cover one space between two longerons with one piece of paper, from nose to tail, and Fig. 191 shows the method employed. Coat the selected longerons with paste, cut the required strip of paper, and, holding it at each end, place it lightly upon the pasted surfaces. Do not attempt to pull the tissue into place, but let it fall naturally upon the job. If you attempt to manipulate the tissue too much it will wrinkle, and will have to be lifted and relaid. Now, run a finger over the tissue along the pasted longerons, thus sticking it down. Evenness of tension is of more importance than tightness at this stage, but as a few wrinkles may appear here and there, they may be worked out with the fingers towards the edges.

The strip thus applied may be left for the paste to dry; meanwhile another strip of tissue may be applied to longerons at some other part of the fuselage. When the paste is set, a return may be made to the first strip, when the overhanging surplus of tissue may be trimmed off with a razor blade. This process is in operation in Fig. 191. The wings and the tail section are just plain covering jobs which require little comment. It must be remembered, however, that the "Eiffel 400" section has a pronounced undercamber, and it will be necessary to paste the bottoms of the ribs, and to press the undersurface covering to them. It will, therefore, be advisable to cover the bottoms of the wings first.

The tail has no complicated coverings, except, perhaps, the small, detached part of the fuselage. Some difficulty may be encountered by the inexperienced in obtaining a neat fair-in between the plane and the centre structure, but if the job is tackled with a little thought and experiment, and small pieces of paper are used, piecing-in as one goes, the matter will be rendered easier.

Before applying the dope to the machine, all surfaces should be water-sprayed with clean water. The tissue should then be allowed to dry thoroughly, and this will have a great tightening effect on the paper. While the wings are drying they should be clamped down to a flat board, and anchored here and there with small weights. This will ensure that the pull of the covering will not warp them. Apply one coat of cellulose dope to the fuselage only, and put aside to dry for several hours. The wings and tail do not have this coat of cellulose dope, but are given one coat of banana oil No. 2. Finally, one coat of the banana oil is applied to the covering of the fuselage.

CHAPTER XVIII

THE "G.B.3"

World's and British Official Duration Record Holder

The name of "Bob" Copland of the Northern Heights Model Flying Club needs no introduction to those familiar with the world of model aeronautics. Mr. Copland has gained an *international* reputation as the designer, builder and flyer of record-breaking duration 'planes. He has represented England in the winning Wakefield Cup team in the U.S.A., and has steadily upheld the reputation of British model flyers in several European countries.

Among a long series of super-duration models, designed by Mr. Copland, the "G.B.3," illustrated and described in this Chapter, probably represents the peak of achievement in this class of model aeroplanes, and the thanks of the whole model aeronautical community are due to him for the ready and sportsmanlike manner in which he has allowed his design to be published.

"G.B.3" presents, both in design and structure, a perfect example of modern practice, and is capable of a performance which, a few short years ago, would have seemed incredible. The successes of this machine have culminated in the winning of the Weston Cup, with a flight of 27 mins. 56 secs., thus establishing a new British Rise-off-Ground Record. Since then, it has risen to further "heights," by establishing a new official *Rise-off-Ground Record for the World*, with a flight of 33 mins. 9 seconds.

So much for the performance of "G.B.3."

A glance at the illustrations in Figs. 194 and 194A* will show

---

* Full-sized blueprints of this machine are available.

that no undue difficulties or complications are to be met with in the design. Both the tail unit and the main plane are faired into the fuselage, and a spinner is incorporated at the propeller boss. These features, together with the oval section fuselage, help to present that clean, streamlined appearance which characterises the machine.

The Fuselage

This is of eliptical cross-section, with formers and stringers as the basic construction. The formers are of the wound-former type, which have been previously mentioned. It may be helpful to give readers a brief outline of the exact manner in which these formers are wound.

In the first place, it is necessary to prepare a number of cardboard jigs, corresponding to the measurements given on the print. These jigs are $\frac{1}{4}$ inch smaller all round than the diameter of the finished formers. It will be seen that the jigs have a round hole in the centres, and that they are split across their greatest axis. The round, central hole is for the purpose of stringing the jigs upon a length of $\frac{1}{4}$ inch dowel rod, and if desired, these holes may be square, and a square building rod used.

Now we must cut a number of strips of 1/32nd inch balsa, 3/32 inch in width. Turning our attention to the photograph (Fig. 196), the exact method of procedure may be seen. In the centre of the picture may be seen one of the cardboard jigs, with the central hole, and split into two halves. On the left it will be observed that the jig has been closed up and pinned to the board. We now apply one wrap of the balsa strip, holding this tightly against the jig with pins placed here and there. Now, proceed with the next wrap, applying cement as the wrap is made, withdrawing the pins and reinserting them outside the second wrap. In this way, four complete wraps are made, and the picture shows the last wrap about to be completed.

When the wound former is made, it should be loosened from its jig, and should present the appearance of the one shown in the right-hand side of the picture. Next, the former is again replaced on the jig, and sanded, in position, to a width of 3/32 inch. The building rod is now marked off along its length with the correct positions of all the formers, and these, still mounted upon their jigs, are threaded on.

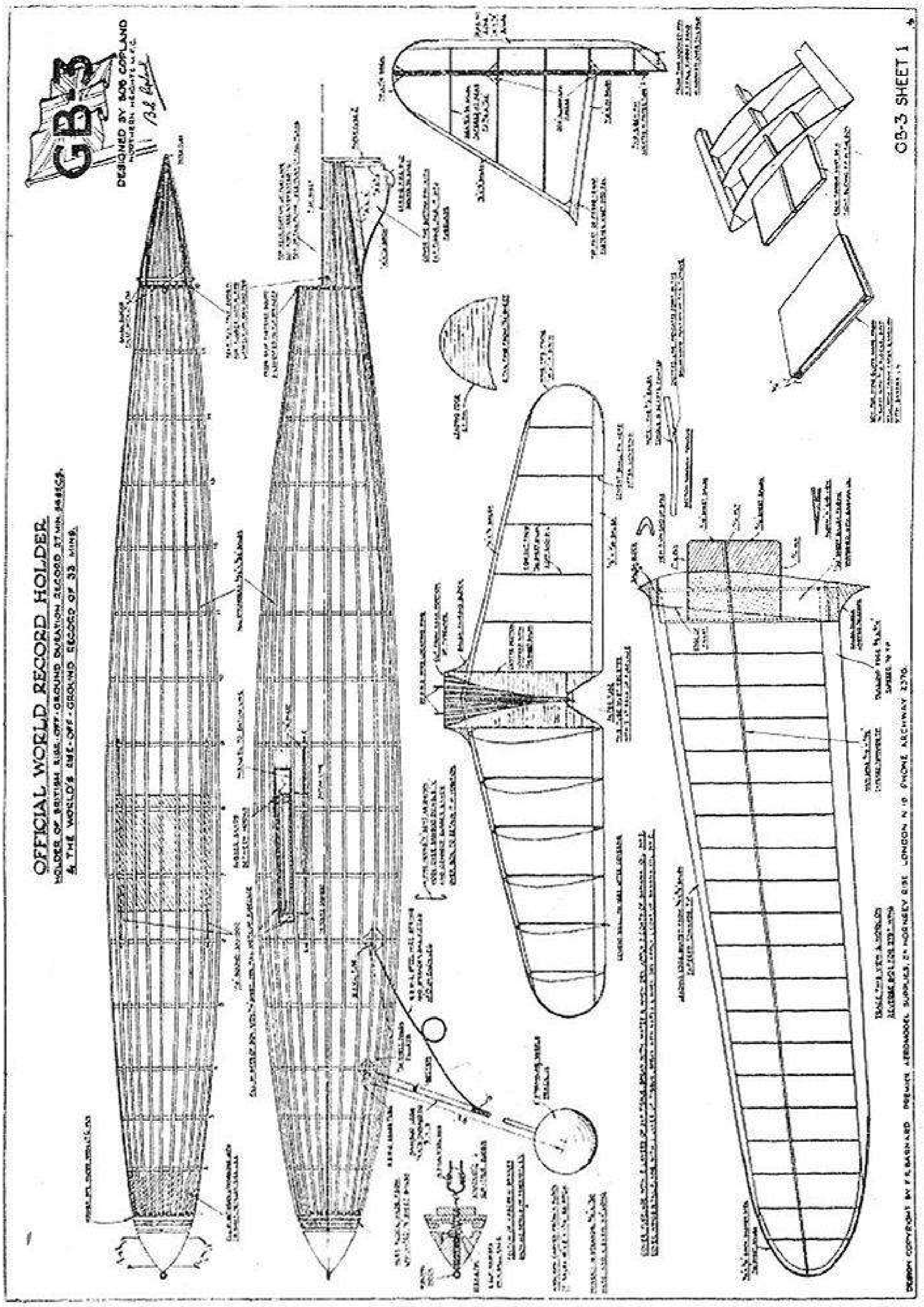
OFFICIAL WORLD RECORD HOLDER
HOLDER OF BRITISH RISE-OFF-GROUND DURATION RECORD 27 MIN 58 SECS.
& THE WORLD'S RISE-OFF-GROUND RECORD OF 33 MINS.
GB-3
DESIGNED BY BOB COPLAND
NORTHERN HEIGHTS M.F.C.
GB-3 SHEET 1
DESIGN COPYRIGHT BY F.R. BARNARD PREMIER AEROMODEL SUPPLIES, 2A HORNSEY RISE LONDON N.19 PHONE ARCHWAY 2376.

Fig. 194

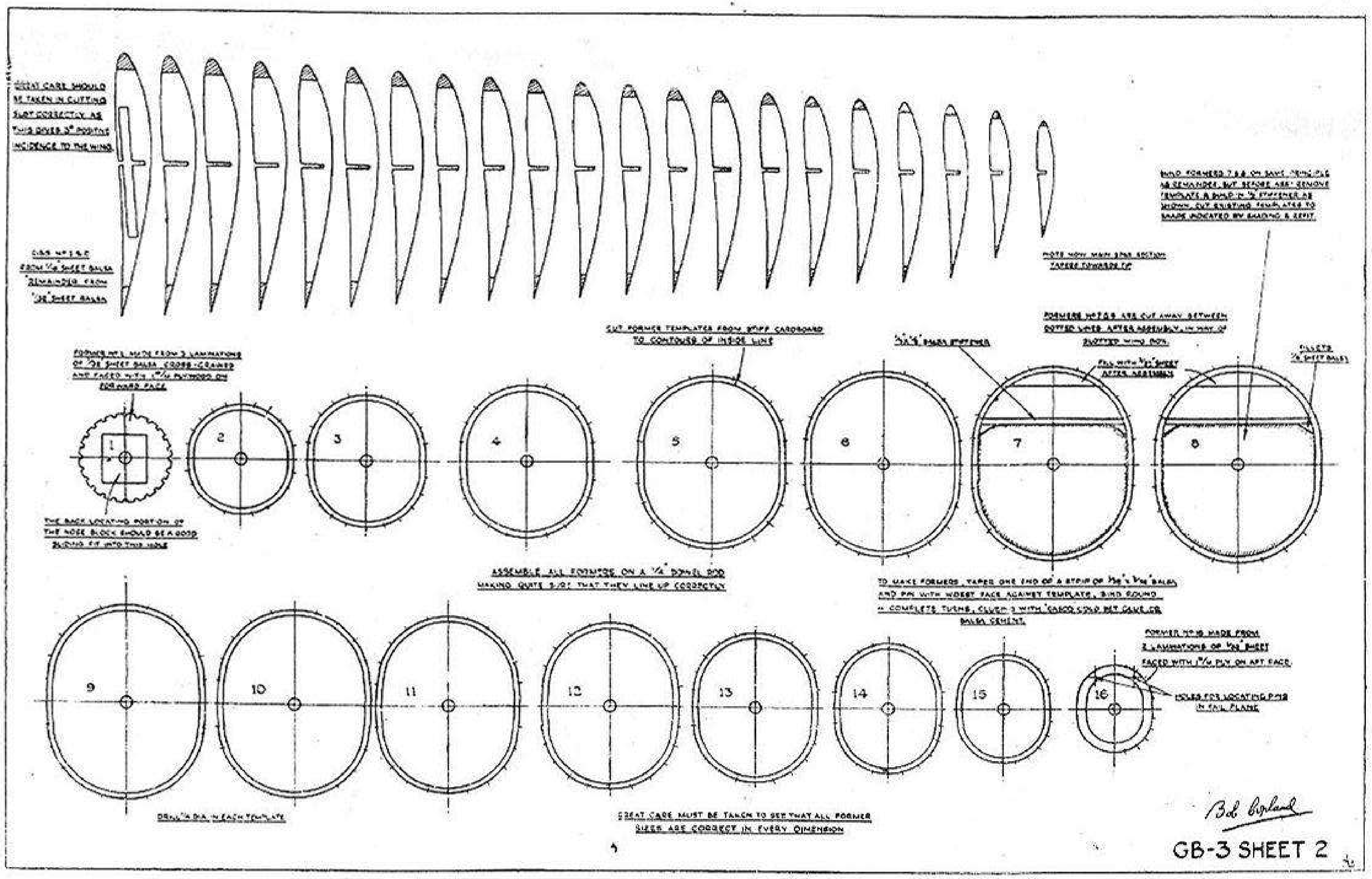
GREAT CARE SHOULD BE TAKEN IN CUTTING SLOT CORRECTLY AS THIS GIVES 3° POSITIVE INCIDENCE TO THE WING.
RIBS Nos 1 & 2 FROM 1/8" SHEET BALSA REMAINDER FROM 1/32" SHEET BALSA
NOTE HOW MAIN SPAR SECTION TAPERS TOWARDS TIP
BIND FORMERS 7 & 8 ON SAME PRINCIPLE AS REMAINDER, BUT BEFORE ASSY. REMOVE TEMPLATE & BIND IN 1/8 STIFFENER AS SHOWN. CUT EXISTING TEMPLATES TO SHAPE INDICATED BY SHADING & REFIT.
FORMERS Nos 1 MADE FROM 3 LAMINATIONS OF 1/8" SHEET BALSA CROSS-GRAINED AND FACED WITH 1/64" PLYWOOD ON FORWARD FACE
THE BACK LOCATING PORTION OF THE NOSE BLOCK SHOULD BE A GOOD SLIDING FIT INTO THIS HOLE
CUT FORMER TEMPLATES FROM STIFF CARDBOARD TO CONTOURS OF INSIDE LINE
1/8"×1/4" BALSA STIFFENER
FORMERS Nos 7 & 8 ARE CUT AWAY BETWEEN DOTTED LINES AFTER ASSEMBLY, IN WAY OF SLOTTED WING ROOT.
FILL WITH 1/32" SHEET AFTER ASSEMBLY
FILLETS 1/8" SHEET BALSA
1
2
3
4
5
6
7
8
ASSEMBLE ALL FORMERS ON A 1/4" DOWEL ROD MAKING QUITE SURE THAT THEY LINE UP CORRECTLY
TO MAKE FORMERS, TAPER ONE END OF A STRIP OF 1/32"×1/16" BALSA AND PIN WITH WORST FACE AGAINST TEMPLATE, BIND ROUND 4 COMPLETE TURNS, GLUEING WITH "CASCO" COLD SET GLUE OR BALSA CEMENT.
FORMER No 16 MADE FROM 2 LAMINATIONS OF 1/32" SHEET FACED WITH 1/64 PLY ON AFT FACE.
HOLES FOR LOCATING PINS IN TAIL PLANE
9
10
11
12
13
14
15
16
DRILL 1/4 DIA. IN EACH TEMPLATE
GREAT CARE MUST BE TAKEN TO SEE THAT ALL FORMER SIZES ARE CORRECT IN EVERY DIMENSION
Bob Copland
GB-3 SHEET 2

Fig. 194a

At this stage we may construct a building stand, somewhat after the pattern of the one shown in Fig. 177, in Chapter XVII. Although showing a somewhat different method of construction, this picture really indicates the next steps in the making of the present fuselage. It will be seen that the formers have been mounted upon the rod, and the stringers applied. If the four main stringers are cemented on as shown, this will hold the structure firmly while the remaining stringers are glued into position.

This leaves the fuselage ready to have the remaining stringers added, and this should now be done.

Former No. 1, that is the nose former, is circular in shape, and has a rectangular hole cut in the centre into which the locating piece of the nose block should fit. The outside edge of this former has 24 slots cut into it. These slots are spaced equidistant around the circumference, and their purpose is to receive the front ends of the stringers.

Fig. 195.—" G.B. 3 " in Yugoslavia. The victorious British team after winning the King Peter Cup

At the rear end of the fuselage, the stringers are drawn together and cemented, and a small paper tube is also cemented at the position shown in the drawing. It will be noted that this paper tube protrudes below the general level of the bottom of the fuselage, and that it is reinforced with small balsa strips. It is to the lower end of this tube that the extremity of the birch tail skid is cemented. Note also that a small wire skid is bound to the birch strip. This wire forms the tail skid proper, as, in the finished machine, the birch strip forms the framework of an underslung fin, which is covered with Jap tissue.

The top half of the end of the fuselage, from former No. 16, is now completely cut off, and is cemented to the centre of the top of the tail plane, thus carrying on the lines of the fuselage when the tail is in position.

Provision for anchoring the rubber motor at the rear end of the fuselage is made by cementing a small piece of balsa to either side of the fuselage. A bamboo peg passes through holes in these pieces of balsa and through the centre of a "Run True" bobbin, to which the rubber is affixed.

Wing-Fixing

The wing-fixing is, perhaps, the most difficult part of the machine.

The formers are cut away, as shown on the drawing, to allow the wing mount to be moved. The stringers on which the mount slides are then reinforced with sheet balsa. Two bamboo rods, 1/16 inch in diameter, are located in holes drilled in formers Nos. 8 and 9. In the drawing these are marked "X."

A box-like structure forms the mount itself, which is built of *hard balsa*. It will be seen in the lower right-hand corner of Fig. 194. The whole of this box must be bound with tissue paper and cement, and varnished with banana oil. If desired, glasspaper may be cemented to the bottom of the box, to make a friction fit. It should be noted that the wing mounting box should not protrude beyond the width of the fuselage.

On again glancing at the drawing, it will be seen that fixing tongues are built into the root of each half wing. These tongues must be a tight sliding fit into the locating box, and it will be understood that, when in position, the effect is to form one complete wing.

Rubber bands form the method of securing the locating box within the fuselage. These bands are stretched over the top of the box, and are attached to the ends of wire hooks; the other ends of these hooks are looped over the bamboo rods.

Wings

These are built up in a straightforward manner, and have the ribs spaced at a distance of every inch. The leading- and trailing-edges are slightly stouter than are normally used, but the incorporation of these results in a wing which is particularly robust and free from any tendency to warp. A rectangular centre spar passes through each rib, and is built into the wing fixing tongue. Ribs are butt-glued to the leading- and trailing-edges, which are shaped to conform to the wing section. Ribs Nos. 1 and 2 are of 1/16 inch sheet balsa ; all other ribs are of 1/32 inch sheet balsa.

Particular attention should be paid to the cutting of the slot in rib No. 1. This slot locates the wing-fixing tongue, and upon it depends the whole line-up of the machine. It is *essential* that this slot be cut to give a *three degree* positive incidence to the wing.

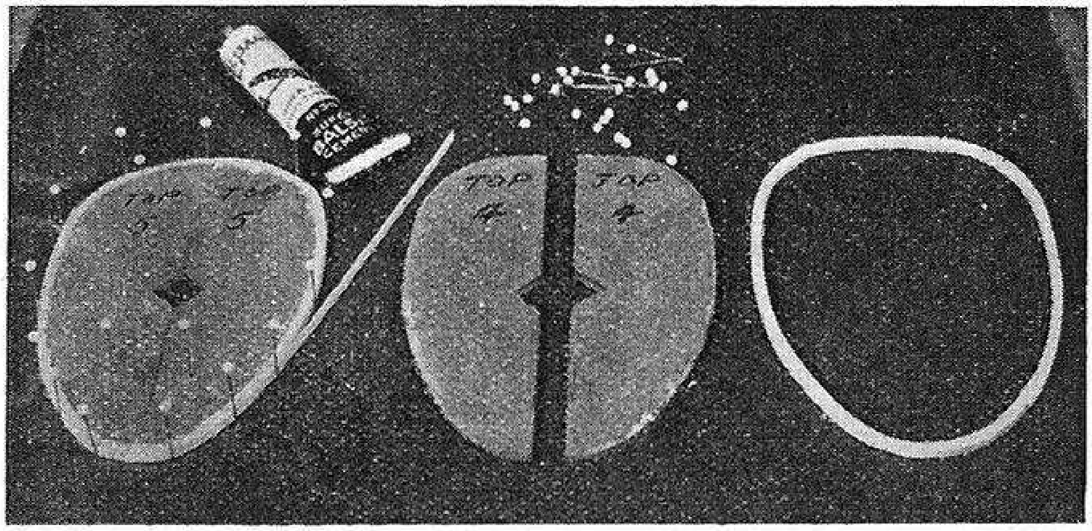

Fig. 196.—Showing method of winding formers such as are used in the construction of "G.B. 3"

The wing-fixing tongues are built-in structures of 3 mm. plywood and 3/16 inch sheet balsa, and the construction should be readily understood from the drawing in Fig. 194.

Wing tips are of 1/16 inch × 1/16 inch birch strip, steamed to shape, and backed with 1/16 inch sheet balsa. The birch is inset into the leading- and trailing-edges, and is well smoothed with glasspaper when finished.

As it is essential that the wing-fixing tongues be strong, they are covered with three layers of tissue paper ; cellulose cement being applied between each layer. They must also be a tight fit in the wing mount, as this is all that keeps the wings in position.

If the wing fillets and fairings are built up carefully, they can be made to look quite good, but it is a job requiring care. A small block of balsa is cemented to the front of the leading-edge, at the wing root. A similar piece of balsa is also cemented to the trailing-edge in a like position. These blocks are then shaped to fit the fuselage, and also to the shape of the fillets themselves. These are shown in the plan drawing of the wing, at "A" and "B" in Fig. 194. When these have been shaped, 1/32 inch sheet balsa is cemented between them, so that the whole fillet fits the fuselage.

Undercarriage

This is a very simple arrangement. Legs are of $\frac{1}{4}$ inch × 1/8 inch bamboo at the tops, tapering to 1/8 inch × 1/8 inch at the extremities. They are fixed to the fuselage by means of 18 S.W.G. piano wire ; one piece of wire only is used. This is passed through a piece of 18 S.W.G. brass tubing which is bound and cemented to former No. 4. These points of fixing are reinforced with small pieces of 3/32 inch balsa. The protruding ends of the wire are bent to give a 14 inch track to the wheels, and are then bound and cemented to the bamboo legs.

A length of 18 S.W.G. piano wire with small loops formed in it, constitutes the simple springing device. One piece of wire is again used to form the springs of both legs. It is passed through a length of 18 S.W.G. brass tubing (affixed to former No. 6, and held in the manner described above). It is then bent to give the desired track to the wheels ; the loops are formed, and the ends bound and cemented to the bamboo legs. Streamlined balsa wheels, of two inches diameter, are used.

Tail Plane

Simplicity is again a feature of the tail plane. It is built with a lifting section, with ribs cut from 1/32 inch balsa, 1/8 inch × 1/8 inch balsa leading-edge, and a trailing-edge of 3/8 inch × 1/16 inch balsa. Wing tips are of 1/16 inch × 1/16 inch birch strip.

The centre portion is faired on to the top of the fuselage by means of the piece of fuselage end, already described as being cemented to the centre of the tail fin.

At the front end the tail is held by two small wire prongs which locate into holes in former No. 16. At the rear end of the tail a small piece of paper tubing is cemented, and reinforced by a small piece of balsa sheet. This small paper tube should locate with the paper tube affixed to the underslung fin on the fuselage. A small birch dowel on the rudder fin locates in both these pieces of tube ; thus, the rear end of the tail, and that of the fin itself, is secured.

A press snap-fastener, one half of which is bound and cemented to the fuselage top, and the other half to the front of the fin, secures this at the front end.

An unusual refinement, not often found on this class of model aeroplane is the adjustable rudder or trimmer at the back of the tail fin. The fin is constructed by similar methods and of similar materials to those employed for the tail plane. The trimmer is hinged to the fin proper by means of small strips of 0.006 G. aluminium.

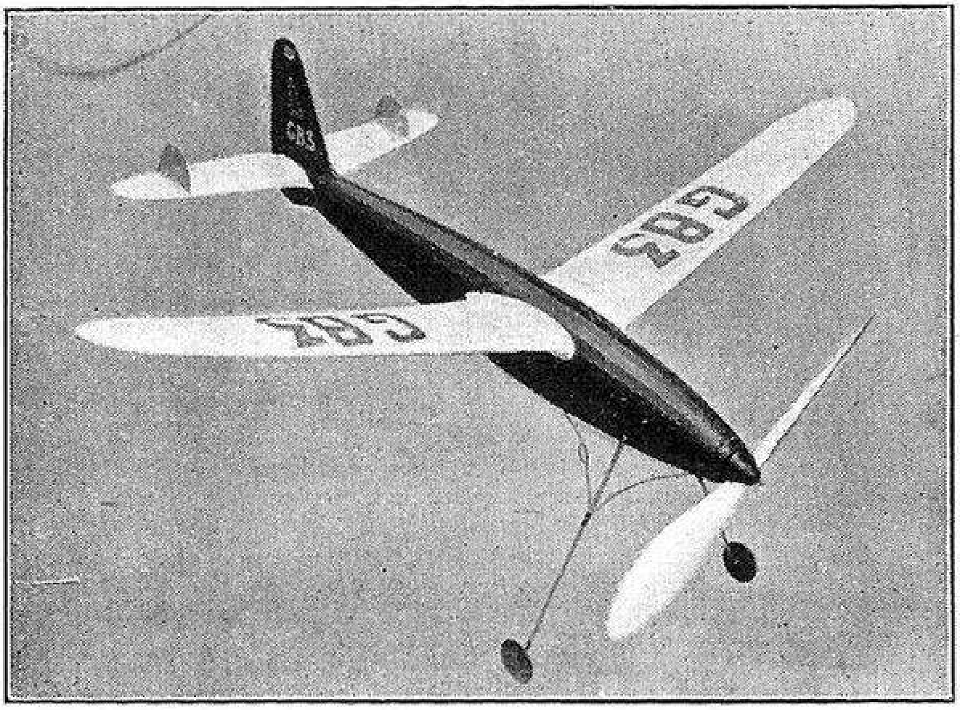

Fig. 197

When the tail plane has been covered, two small stabilising fins, cut from 1/32 inch sheet balsa, are cemented in an upright position on each of the last tail ribs but one. An inspection of the drawing will make this matter clear.

Propeller and Nose Block

The propeller is carved from a block of balsa wood of 18 inches × 2 inches × $1\frac{3}{4}$ inches dimensions, to a pitch of 26 inches. The spinner is carved as an integral part of the propeller boss, and is recessed to allow room for the free-wheel device. When carved and balanced, the blades are covered with tissue paper and french polished.

The nose block is built up of four layers of 1/8 inch sheet balsa, cemented together with the grains running in different directions. This nose block is also recessed to bring the spinner close to the nose.

It will be noticed that " Run True " bobbins are used to hold the rubber, both at the front and rear ends of the skein.

Power

A skein of 44 inches long, composed of 18 strands of 3/16 inch × 1/30 inch rubber supplies the power.

Covering and Finishing

The fuselage is covered with two layers of Jap tissue paper. When covered these should be sprayed with water, and when dry, two coats of Banana Oil No. 2 should be given. Wings and tail unit have only one layer of Jap tissue. These should also be water sprayed, but only one coat of Banana Oil No. 2 should be applied.

ABAC

For Multiplication or Division of Numbers.

For Finding the Log, Square or Cube of Numbers.

For Finding the Square or Cube Roots of Numbers.

Instructions

To Multiply Any Two Numbers:

Place straight-edge across the multiplier on scale A and the multiplicant on scale E. Read product on scale C.

To Divide Any Two Numbers:

Place straight-edge across the number to be divided on scale C, and the divisor on scale A. Read quotient on scale E.

To find the Log, Square or Cube of Any Number:

Place straight-edge across the number of which these functions are required, on scales A and E. Read off the corresponding values on scales B, C or D.

To Find the Square or Cube Roots of Any Number:

Place straight-edge across the number on scale C or D, at right angles to the scale. Read off the required root on scale A or E.

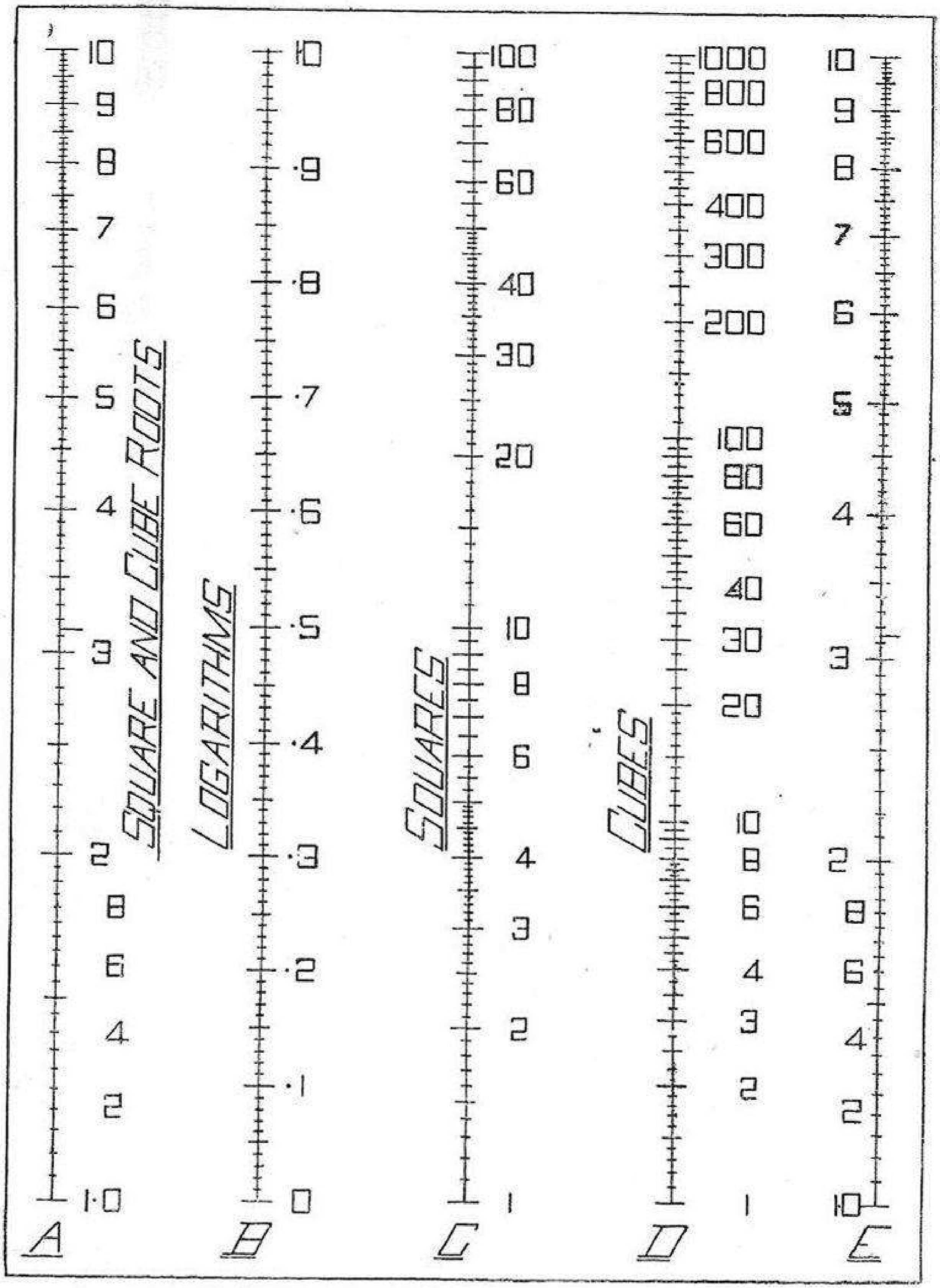
SQUARE AND CUBE ROOTS
LOGARITHMS
SQUARES
CUBES
A
B
C
D
E
1·0 2 4 6 8 2 3 4 5 6 7 8 9 10
0 ·1 ·2 ·3 ·4 ·5 ·6 ·7 ·8 ·9 10
1 2 3 4 6 8 10 20 30 40 60 80 100
1 2 3 4 6 8 10 20 30 40 60 80 100 200 300 400 600 800 1000
10 2 4 6 8 2 3 4 5 6 7 8 9 10

Fig. 198

ABAC

FOR FINDING PROPORTIONATE HEIGHT AND WIDTH OF SQUARE, RECTANGULAR, TRIANGULAR OR ELLIPTICAL, AND DIAMETER OF CIRCULAR, FUSELAGES, TO CONFORM TO S.M.A.E. FORMULA

$$\frac{(A = L^2)}{100}$$

TO FIND HEIGHT AND WIDTH OF SQUARE-SECTION FUSELAGE:

Stretch thread at right angles to centre scale at point indicating length of machine. Read off height and width on two outer scales.

TO FIND HEIGHT AND WIDTH OF RECTANGULAR SECTION FUSELAGE:

Stretch thread across point indicating length of fuselage on centre scale. Swivel thread on this point until it intersects desired width of machine on outer left-hand scale. Read off height on outer right-hand scale.

TO FIND HEIGHT AND BASE OF TRIANGULAR SECTION FUSELAGE:

Stretch thread across centre scale at point indicating length of machine. Swivel thread on this point until it intersects desired base of triangle on outer left-hand scale. Read off height of triangle by doubling the figure indicated on the outer right-hand scale.

TO FIND DIAMETER OF CIRCULAR SECTION FUSELAGE:

Stretch thread at right angles to centre scale at point indicating length of machine. Read off diameter on either of the two inner scales.

TO FIND HEIGHT AND WIDTH OF ELLIPTICAL SECTION FUSELAGE:

Stretch thread across point indicating length of machine on centre scale. Swivel thread on this point until it intersects desired width on inner left-hand scale. Read off height on inner right-hand scale.

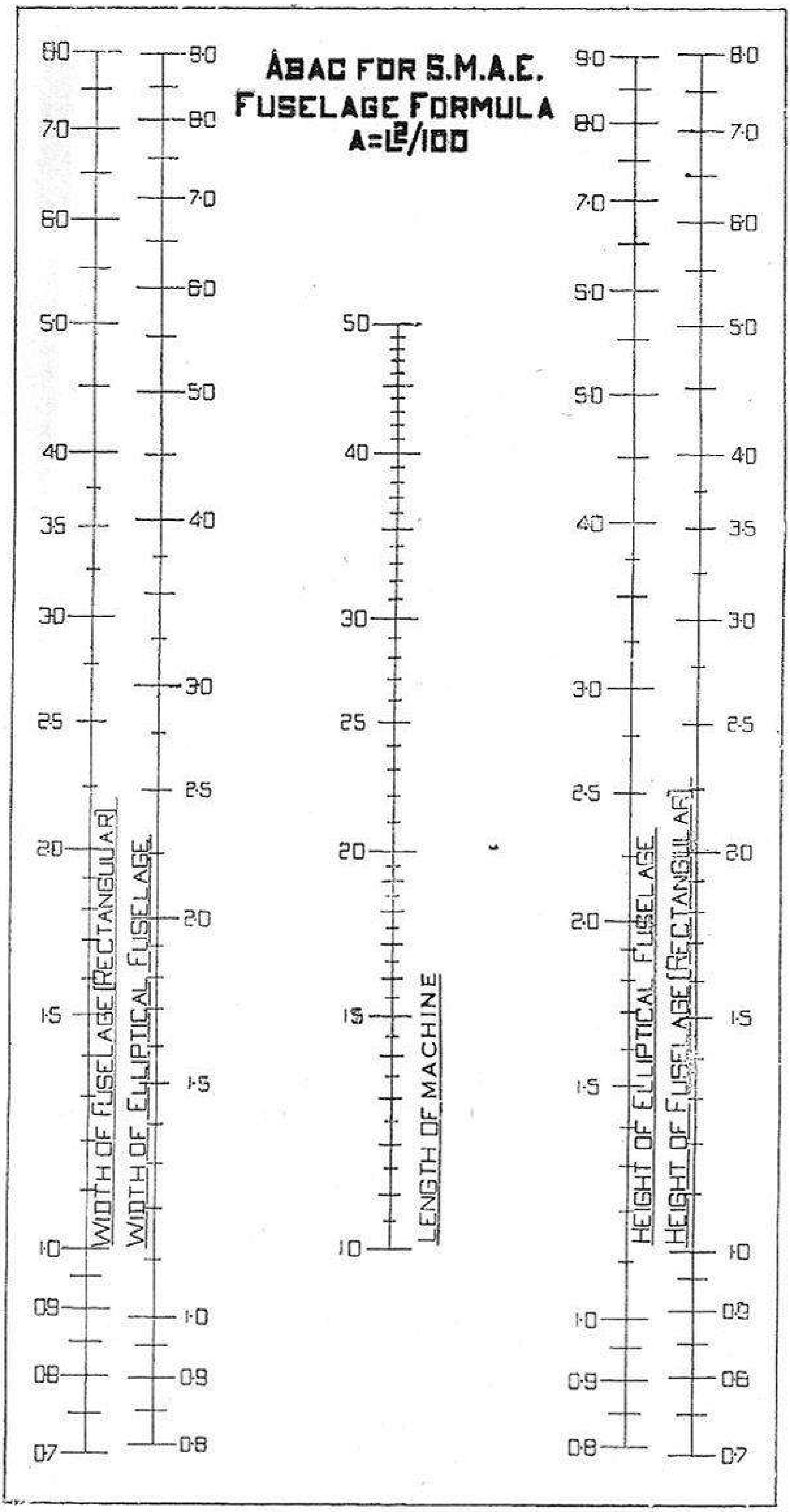
ABAC FOR S.M.A.E.
FUSELAGE FORMULA
A=L²/100
WIDTH OF FUSELAGE (RECTANGULAR)
WIDTH OF ELLIPTICAL FUSELAGE
LENGTH OF MACHINE
HEIGHT OF ELLIPTICAL FUSELAGE
HEIGHT OF FUSELAGE (RECTANGULAR)
8·0
7·0
6·0
5·0
4·0
3·5
3·0
2·5
2·0
1·5
1·0
0·9
0·8
0·7
9·0
50
40
30
25
20
15
10

Fig. 199

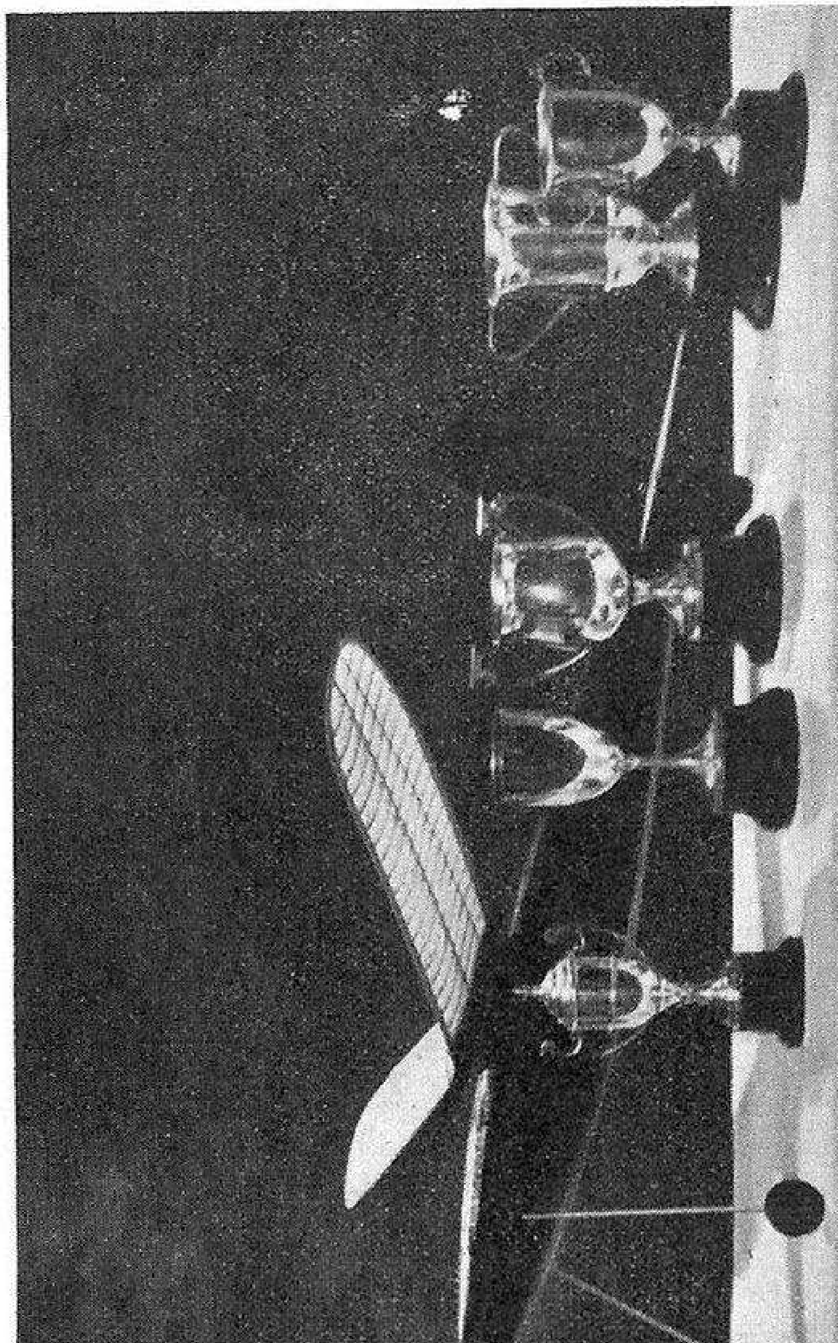

Photo by courtesy] [*A. G. Bell*

"BY EFFORT WE ACHIEVE"

A modern type duration model aeroplane, and some of the trophies which it has won

THE

MODEL ENGINEER

EVERYBODY'S JOURNAL OF
MECHANICS, ELECTRICS, MODELS, & TOOLS

EDITED BY

PERCIVAL MARSHALL, C.I.Mech.E.

Published every Thursday. *Price* **6d.**

THIS is your paper if you are interested in tools, mechanics, models, experimental electrical work, or any kind of light engineering. It not only gives you fascinating descriptions and photographs of beautiful models and ingenious inventions, but tells you about the clever people who build these wonderful things, and about the workshops in which they are made. It shows you how to make all kinds of useful tools and gadgets, and the difficulties of many workshop problems are explained by expert writers. It is a friendly paper ; the readers are one big family, and the correspondence columns are full of helpful discussion and opinions. The advertising pages are particularly interesting for their attractive bargains in tools, engines, motors, and miscellaneous mechanical and electrical equipment. It is everywhere recognised as the best medium for buying or selling any kind of small-power plant, tools, or accessories.

Get this week's issue ; it will open the door to a new world of technical interest for you.

Obtainable through all Newsagents

PERCIVAL MARSHALL & CO. LTD.
Cordwallis Works, Maidenhead, Berks.