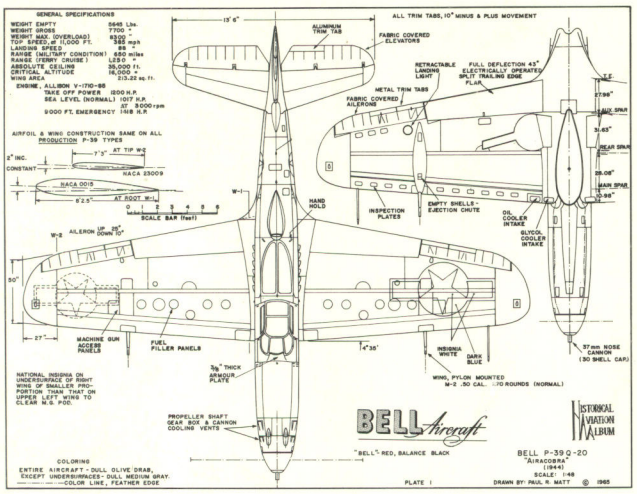

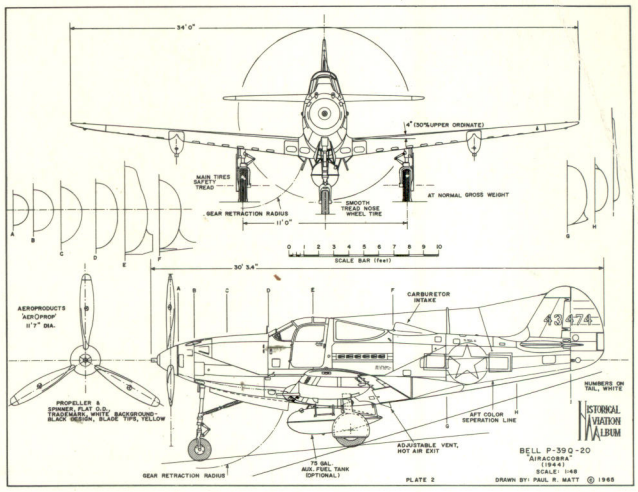

Paul Matt Scale Airplane Drawings

Volume 1

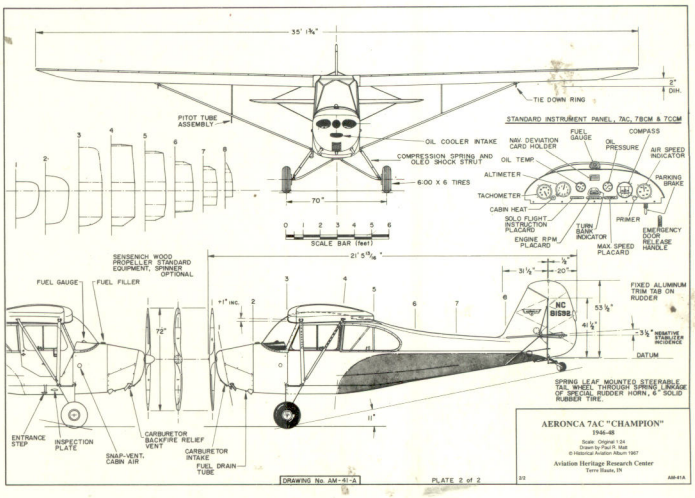

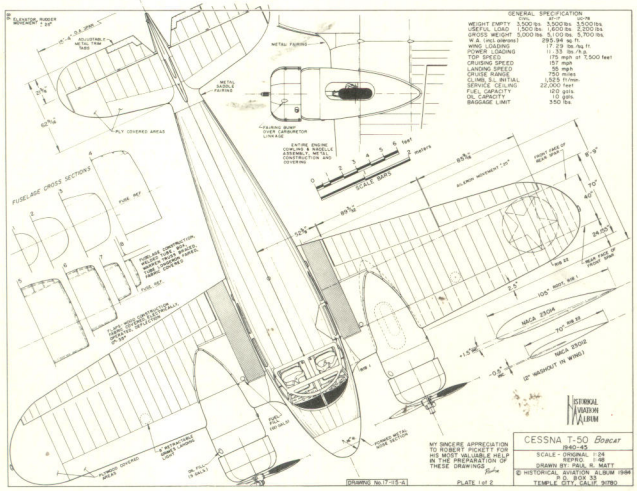

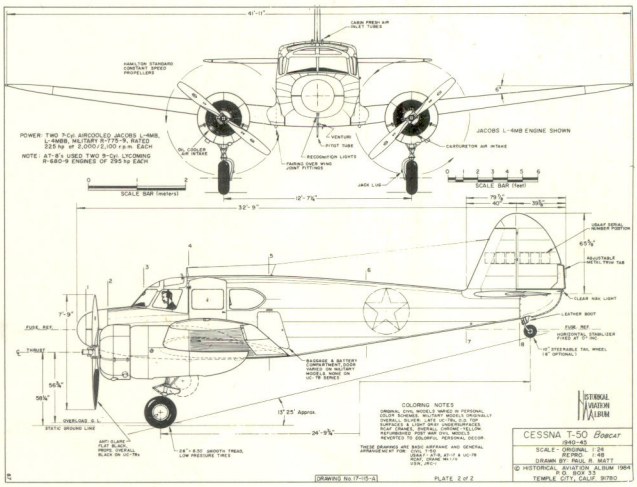

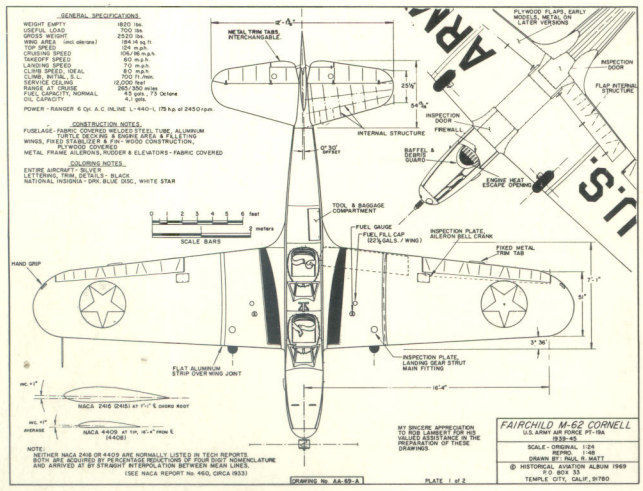

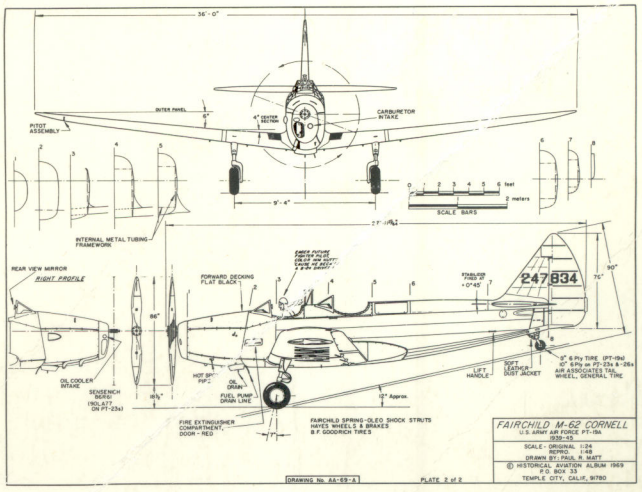

Paul Matt

Scale Airplane Drawings

Vol. 1

Drawn by the late, great

Paul Matt

Compiled by
Drina Welch Abel

The **Paul Matt Scale Airplane Drawings** are available individually on large sheets. See next few pages.
The **Paul Matt Scale Airplane Drawings** are also available on CDs. The advantage of the CDs is that in addition to the beautiful drawings included in the Paul Matt books (325 pages of drawings of 124 airplanes), the Paul Matt CDs also include more than 1,500 photos of all the planes identified in these two volumes (books).

Published by
aviation-heritage.com
Drina Welch Abel & Alan Abel
PO Box 665
Destin FL 32540
phone: 850.654.7277
fax: 850.654.7278
sales: 1.800.999.0141

Printed in U.S.A.

MORRISON CUSTOM AIRCRAFT
INVENTORY # SCANNED

The Paul Matt Scale Airplane Drawings are **also available on 4 CD-Roms.** Each airplane drawing listed on the next page is accompanied by an average of 12 airplane photos. Each Paul Matt CD contains approximately 450 images of drawings & photos. In total, the 4 Paul Matt CDs contain 1,800+ images.

With viewing program, our **Paul Matt CDs allow you to crop, enlarge, zoom-in & print!**
All of the drawings in the 2 Paul Matt Scale Drawings Books are included in the 4 Paul Matt CDs (which, unlike these books, also have 1,500+ photos).

Referring to the alphabetical listing on the next page, know that each CD contains the following airplanes:

CD-1, $24.95, Airplanes from Aeromarine 39B to Curtiss F92 Sparrowhawk.
CD-2, $24.95, Airplanes from Curtiss MF-K-6 Seagull to Grumman J2F-Duck.
CD-3, $24.95, Airplanes from Heath LNB-4 Parasol to Pfitzner 1910 Monoplane.
CD-4, $24.95, Airplanes from Piper J-3 Cub to Wright-Martin V.

Include $4.50 s/h per order. For more info:

www.aviation-heritage.com
PO Box 665
Destin FL 32540
1.800.999.0141

The publisher of this book calls specific attention to the fact that the plans, specifications and drawings which have been reproduced and presented in this book cannot be relied upon as a basis for reproducing any part or portion of an airplane which is the subject matter of this publication.
The publisher makes no representations or guarantee regarding the engineering accuracy of the data reflected and shown in the plans, specifications and drawings reproduced and presented in this book and do expressly disclaim any responsibility for any part or portion of an airplane reproduced therefrom.

Paul Matt Scale Airplane Drawings, Vol. 1
ISBN 0-943691-04-4

Copyright, Historical Aviation Album
Drina Welch Abel & Alan Abel

3-View Scale Drawings by Paul Matt

Volume 1 contains all airplanes listed from A through G. Volume 2 contains all airplanes listed from H through W. If you would like individual, large sheets of any of the below listed scale drawings, send request, catalog #, appropriate fee, and shipping charge of $3.95. If you want your drawing rolled in a tube — add $4.00. Clear, concise, uncluttered 3- and 4- view engineering presentations, in large (17" x 22"), easy to work with standard scales. Drawing is highly detailed and is an accurate working print with all dimensions, specifications, airfoils, cross sections, templates, and color scheme included. These drawings are part of the collection of the internationally acclaimed and highly honored ***Historical Aviation Album.*** All orders are folded unless a tube is ordered. Each has 2 to 6 large sheets. **Rolled in tube — add $4.00 plus $3.95 postage. Send to: Aviation Heritage, P.O. Box 665, Destin, FL 32540.**

DRAWING SCALE CODE:
Last letter of catalog number indicates scale of drawing.

A= 1:24 .... 1/2"= 1'
B= 1:16.....3/4"= 1'
C= 1:48 .... 1/4"= 1'
D= 1:32 .... 3/8"= 1'
E= 1:8.....1 1/2"= 1'
F= 1:6 ..... 2"= 1'
G= 1:96 .... 1/8"= 1'

VOLUME 1 CONTENTS:

		RETAIL PRICE
_ Aeromarine 39B	(#9-78A, 3 shts.)	$16.50
_ Aeronca 7AC "Champion"	(#AM-41A, 2 shts.)	15.00
_ Aeronca C-2	(#10-80A, 2 shts.)	15.00
_ Aeronca C-3 "Collegian"	(#10-81A, 2 shts.)	15.00
_ Aeronca C-3 "Master"	(#10-82A, 2 shts.)	15.00
_ Aeronca K	(#15-103A, 2 shts.)	15.00
_ Aeronca LB "Low wing"	(#AM-60A, 2 shts.)	15.00
_ Alcor C.6.1 Jr. Transport	(#4-33D, 2 shts.)	15.00
_ Anderson-Greenwood AG-14	(#12-94A, 2 shts.)	15.00
_ Beechcraft D-18S Twin	(#6-59A, 3 shts.)	16.50
_ Bell P-39Q "Airacobra"	(#1-7A, 2 shts.)	15.00
_ Berkmans "Speed Scout"	(#2-12B, 2 shts.)	15.00
_ Berliner-Joyce OJ-2	(#AM-48A, 2 shts.)	15.00
_ Berliner-Joyce XF3J-1	(#15-104A, 2 shts.)	15.00
_ Boeing 307 "Stratoliner"	(#7-63C, 2 shts.)	15.00
_ Boeing F3B-1	(#AM-56A, 2 shts.)	15.00
_ Boeing XF7B-1	(#AM-38A, 2 shts.)	15.00
_ Brewster F2A-3 "Buffalo"	(#5-47A, 2 shts.)	15.00
_ Cessna 120/140	(#1-9A, 2 shts.)	15.00
_ Cessna C-37 "Airmaster"	(#6-50A, 2 shts.)	15.00
_ Cessna T-50 "Bobcat"	(#17-115A, 2 shts.)	15.00
_ Consolidated P2Y-2	(#9-71C,3 shts.)	16.50
_ Consolidated PBY-5A "Catalina"	(#17-114C, 3 shts.)	18.00
_ Curtiss "Carrier Pigeon I"	(#2-15A, 2 shts.)	15.00
_ Curtiss 1st Milit. Tract. S.C. No. 21/22 1913.	(#6-55A, 2 shts.)	15.00
_ Curtiss A-3B "Falcon"	(#AM-39A, 2 shts.)	15.00
_ Curtiss AT-9 "Jeep"	(#2-18A, 2 shts.)	15.00
_ Curtiss B-2 Condor Bomber	(#18-116C, 2 shts.)	15.00
_ Curtiss B-20 Condor Transport	(#18-117C, 2 shts.)	15.00
_ Curtiss F Boat	(#1-1A, 2 shts.)	15.00
_ Curtiss F92 "Sparrowhawk"	(#18-118A, 2 shts.)	15.00
_ Curtiss MF-K-6 "Seagull"	(#AM-37A, 2 shts.)	15.00
_ Curtiss P-36 "Hawk"	(#7-62A, 2 shts.)	15.00
_ Curtiss P-6E "Hawk"	(#5-42A, 2 shts.)	15.00
_ Curtiss PW-8	(#10-79A, 2 shts.)	15.00
_ Curtiss R-6 Racer	(#HS-73A, 2 shts.)	15.00
_ Curtiss SC-1 "Seahawk"	(#1-8A, 2 shts.)	15.00
_ Curtiss SNC-1 "Falcon"	(#AA-65A, 2 shts)	15.00
_ Curtiss SO3C-1 "Seagull"	(#AM-34A, 2 shts.)	15.00
_ Curtiss Twin JN	(#3-21A, 2 shts.)	15.00
_ Curtiss-Cox "Texas Wildcat"	(#2-14B, 2 shts.)	15.00
_ Curtiss-Wright T-32 "Condor"	(#1-6C, 2 shts)	15.00
_ Curtiss-Wright CW-1 "Jr."	(#11-88A, 3 shts.)	16.50
_ Douglas 0-2	(#11-86A, 3 shts.)	16.50
_ Douglas 0-2H	(#11-87A, 2 shts.)	15.00
_ Douglas 0-38	(#12-92A, 2 shts.)	15.00
_ Douglas 0-38E	(#12-93A, 2 shts.)	15.00
_ Douglas M-2	(#14-68A, 2 shts.)	15.00
_ Douglas A-20G "Havoc"	(#15-102D, 6 shts.)	20.00
_ Etrich 1913 Taube	(#TB-105D, 3 shts.)	16.50
_ Fairchild FC-1	(#17-111A, 2 shts.)	15.00
_ Fairchild FC-2	(#17-112A, 2 shts.)	15.00
_ Fairchild FC-2W "Stars & Stripes"	(#17-113A, 2 shts.)	15.00
_ Fairchild M-62, PT-19 "Cornell"	(#AA-69A, 2 shts.)	15.00
_ Fokker T.5 Netherlands Bomber	(#AA-61C, 2 shts.)	15.00
_ Gallaudet D-1	(#3-20A, 2 shts.)	15.00
_ General Aviation Clark GA-43	(#13-95D, 2 shts.)	15.00
_ Grumman F-11F-1 "Tiger"	(#2-19D, 2 shts.)	15.00
_ Grumman FF-1	(#AA-77A, 2 shts.)	15.00
_ Grumman G-44 "Widgeon"	(#AM5-30A, 2 shts.)	15.00
_ Grumman J2F-5 "Duck"	(#6-53A, 3 shts.)	16.50

VOLUME 2 CONTENTS:

		RETAIL PRICE
_ Heath LNB-4 Parasol	(#4-35B, 2 shts.)	15.00
_ Howard DGA-15P	(#AM-52A, 2 shts.)	15.00
_ Howard DGA-3 "Pete"	(#12-89A, 2 shts.)	15.00
_ Howard DGA-4 "Mike"	(#13-90A, 2 shts.)	15.00
_ Howard DGA-5 "Ike"	(#13-91A, 2 shts.)	15.00
_ Howard DGA-6 "Mr. Mulligan"	(#14-99A, 3 shts.)	16.50
_ Hughes 1B Longwing Racer	(#16-108A, 3 shts.)	16.50
_ Hughes 1B Shortwing Racer	(#16-107A, 3 shts.)	16.50
_ Laird LC-DW-300 "Solution"	(#7-64A, 2 shts.)	15.00
_ Laird LC-DW-500 "Super Solution"	(#8-74A, 2 shts.)	15.00
_ Laird-Turner LTR-14	(#10-83A, 2 shts.)	15.00
_ Lavochkin LA-7	(#AA-46A, 4 shts.)	18.00
_ Lockheed P-80B "Shooting Star"	(#2-10A, 2 shts.)	15.00
_ Lockheed Model 9 "Orion"	(#3-22A, 2 shts.)	15.00
_ Lockheed PV-1 "Ventura"	(#E-101C, 3 shts.)	16.50
_ LWF Cato Model L "Butterfly"	(#10-84A, 2 shts.)	15.00
_ LWF Model G-2	(#2-13A, 2 shts.)	15.00
_ LWF Model H-1 "Owl"	(#11-85C, 2 shts.)	15.00
_ Martin BM-1 and 2	(#1-5A, 2 shts.)	15.00
_ Martin T4M-1, Great Lakes TG-1	(#4-29D, 2 shts.)	15.00
_ Martin TT, 1913 Trainer	(#5-40A, 2 shts.)	15.00
_ Messerschmitt Me 109 E-3	(#AA-75A, 2 shts.)	15.00
_ Morehouse 2 Cyl. Aero Engine	(#3-27E, 1 sht.)	8.00
_ Navy-Wright NW-1 Mystery Racer	(#4-31A, 2 shts.)	15.00
_ Navy-Wright NW-2 Mystery Racer	(#4-32A, 2 shts.)	15.00
_ North American 0-47A	(#13-98A, 3 shts.)	16.50
_ North American AT-6D "Texan"	(#16-106A, 3 shts.)	16.50
_ North American XB-70-1 "Valkyrie"	(#7-66G, 3 shts.)	16.50
_ Packard-Le Pere LUSAC-11	(#1-3A, 2 shts.)	15.00
_ Pfitzner 1910 Monoplane	(#2-11A, 2 shts.)	15.00
_ Piper J-3 "Cub"	(#18-121A, 2 shts.)	15.00
_ Piper J-4 "Cub Coupe"	(#18-122A, 2 shts.)	15.00
_ Piper PA-12 "Super Cruiser"	(#4-36A, 2 shts.)	15.00
_ Republic RC-3 Seabee	(#16-109A, 3 shts.)	16.50
_ Rover Inverted Aero Engine	(#5-45F, 1 sht.)	12.00
_ Ryan B-5 "Brougham"	(#RB-96A, 2 shts.)	15.00
_ Ryan FR-1 "Fireball"	(#3-26A, 2 shts.)	15.00
_ Ryan SCW Low Wing	(#AM9-49A, 2 shts.)	15.00
_ Ryan ST-A	(#9-76A, 2 shts.)	15.00
_ Seversky BT-8	(#3-23A, 2 shts.)	15.00
_ Seversky P-35	(#AA-57A, 2 shts.)	15.00
_ Sikorsky S-39B	(#14-100A, 5 shts.)	18.50
_ Standard J-1	(#17-110A, 2 shts.)	15.00
_ Taylor E-2 "Cub"	(#18-119A, 2 shts.)	15.00
_ Taylor J-2 "Cub"	(#18-120A, 2 shts.)	15.00
_ Thomas-Boeing MB-3A and Thomas-Morse MB-3	(#4-28B, 2 shts.)	15.00
_ Timm TC-170 "Collegiate"	(#8-72A, 2 shts.)	15.00
_ Verville R-3 Racer	(#6-58A, 2 shts.)	15.00
_ Vought F4U-1 "Corsair"	(#AA-51A, 3 shts.)	16.50
_ Vought SBU-1	(#3-24A, 2 shts.)	15.00
_ Vought XF5U	(#8-70A, 3 shts.)	16.50
_ Vultee V-1A Transport	(#2-16A, 2 shts.)	15.00
_ Waco UMF/YMF-5	(#13-97A, 3 shts.)	16.50
_ Waco UPF-7	(#8-67A, 2 shts.)	15.00
_ Waco YKS-6 Cabin	(#2-17A, 2 shts.)	15.00
_ Waterman "Arrowbile"	(#3-25A, 2 shts.)	15.00
_ Waterman "Gosling" Racer	(#1-4B, 2 shts.)	15.00
_ Wright F2W-1 Racer	(#5-43A, 2 shts.)	15.00
_ Wright F2W-2 Racer	(#5-44A, 2 shts.)	15.00
_ Wright Brothers 1903 Flyer	(#0-123A, 2 shts.)	15.00
_ Wright-Martin V	(#1-2A, 2 shts.)	15.00

All of Paul Matt Drawings are soon to be released on "CD" in TIFF and PCX Format! Reserve your copy Today!! The Paul Matt Scale Drawings listed on this page are all being compiled for the first time on CD-ROM in IBM compatible TIFF and PCX formats especially for the CAD modeler. You can have ALL of these ***internationally acclaimed*** drawings on one CD for an incredibly low price! 522 Files available (261 TIFF & 261 PCX)
Cat. No. WS-PMCD-1.....***NEW***.....$99.95 + $3.95 SHIPPING

DEDICATION

Dedicated to the late
Paul R. Matt
and his wife, the late
Joan Woeste Matt
who both contributed greatly to the
recording of aviation history

COLORING NOTES

ALL FABRIC COVERED AREAS - MEDIUM "BATTLESHIP" GRAY
TOPSIDE UPPER WING & HORIZONTAL TAIL SURFACES, (ONLY) - CHROME YELLOW
METAL FUSELAGE TURTLE DECKING, COCKPIT COMBING & ENGINE COWLING - GLOSS BLACK ENAMEL
AIRCRAFT I.D. NUMBERS ON FUSELAGE - WHITE
LANDING GEAR STRUTS - BLACK
SEAPLANE FLOATS, SPRUCE & ASH CONSTRUCTION, MAHOGANY PLY COVERED, FABRIC FINISHED, DOPED - "BATTLESHIP" GRAY

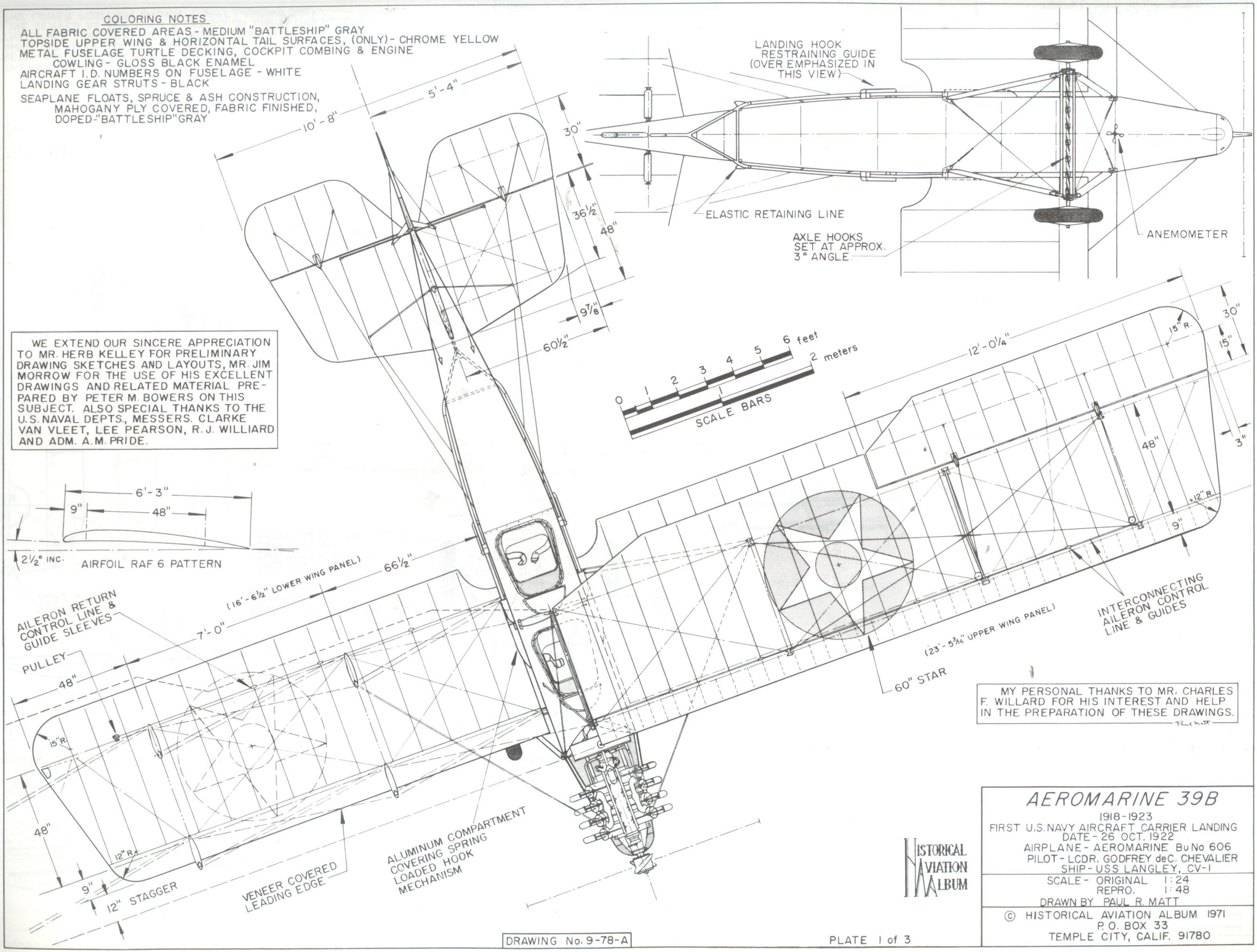

WE EXTEND OUR SINCERE APPRECIATION TO MR. HERB KELLEY FOR PRELIMINARY DRAWING SKETCHES AND LAYOUTS, MR. JIM MORROW FOR THE USE OF HIS EXCELLENT DRAWINGS AND RELATED MATERIAL PREPARED BY PETER M. BOWERS ON THIS SUBJECT. ALSO SPECIAL THANKS TO THE U.S. NAVAL DEPTS., MESSERS. CLARKE VAN VLEET, LEE PEARSON, R.J. WILLIARD AND ADM. A.M. PRIDE.

MY PERSONAL THANKS TO MR. CHARLES F. WILLARD FOR HIS INTEREST AND HELP IN THE PREPARATION OF THESE DRAWINGS.
Paul Matt

HISTORICAL AVIATION ALBUM

AEROMARINE 39B

1918-1923
FIRST U.S. NAVY AIRCRAFT CARRIER LANDING
DATE - 26 OCT. 1922
AIRPLANE - AEROMARINE BuNo 606
PILOT - LCDR. GODFREY deC. CHEVALIER
SHIP - USS LANGLEY, CV-1

SCALE - ORIGINAL 1:24
REPRO. 1:48

DRAWN BY PAUL R. MATT

© HISTORICAL AVIATION ALBUM 1971
P.O. BOX 33
TEMPLE CITY, CALIF. 91780

DRAWING No. 9-78-A

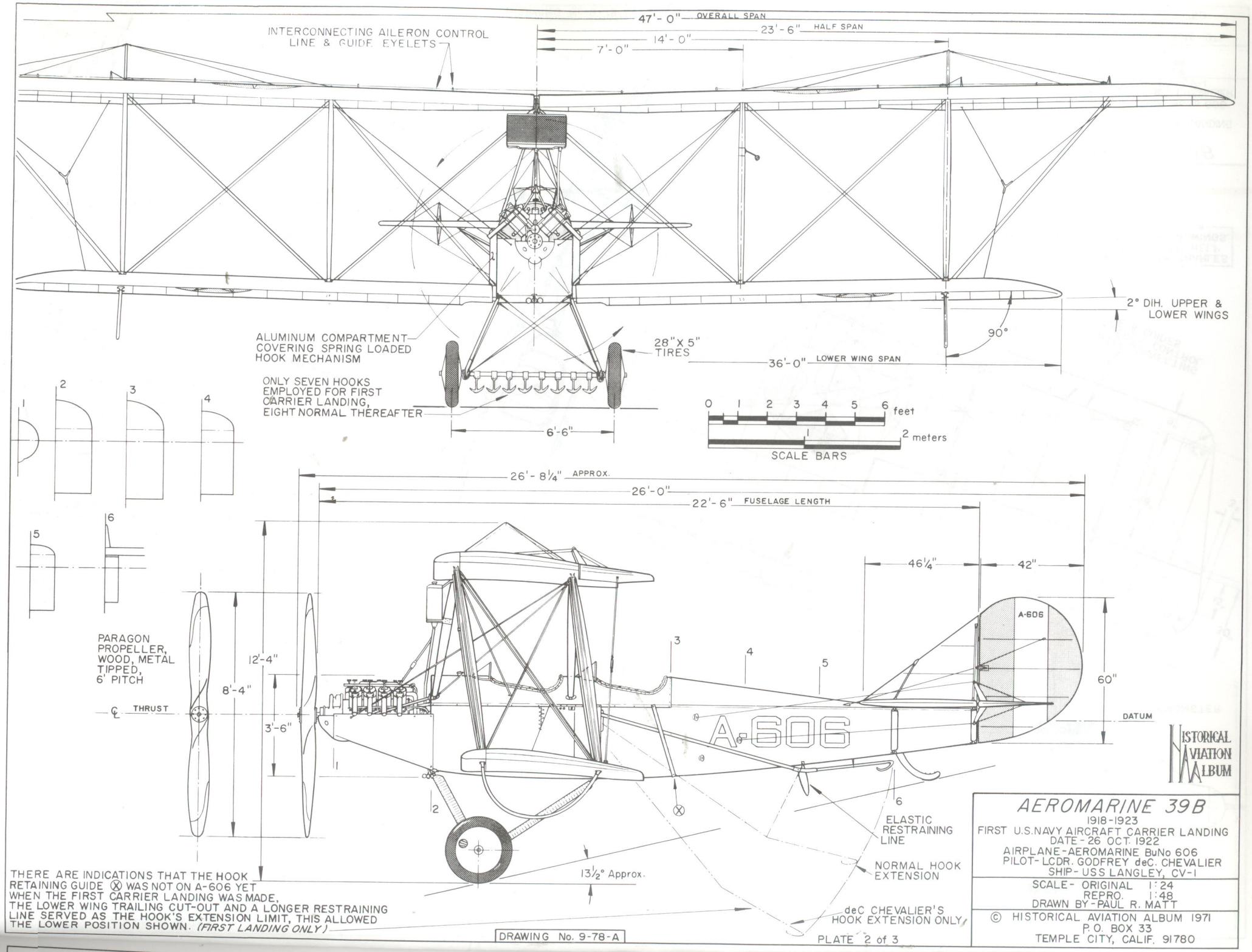
47'-0" OVERALL SPAN
23'-6" HALF SPAN
14'-0"
7'-0"
INTERCONNECTING AILERON CONTROL LINE & GUIDE EYELETS
2° DIH. UPPER & LOWER WINGS
90°
36'-0" LOWER WING SPAN
28" X 5" TIRES
ALUMINUM COMPARTMENT COVERING SPRING LOADED HOOK MECHANISM
ONLY SEVEN HOOKS EMPLOYED FOR FIRST CARRIER LANDING, EIGHT NORMAL THEREAFTER
6'-6"
0 1 2 3 4 5 6 feet
1 2 meters
SCALE BARS
1 2 3 4 5 6
26'-8¼" APPROX.
26'-0"
22'-6" FUSELAGE LENGTH
46¼"
42"
A-606
60"
DATUM
PARAGON PROPELLER, WOOD, METAL TIPPED, 6' PITCH
12'-4"
8'-4"
3'-6"
℄ THRUST
13½° Approx.
ELASTIC RESTRAINING LINE
NORMAL HOOK EXTENSION
deC CHEVALIER'S HOOK EXTENSION ONLY
THERE ARE INDICATIONS THAT THE HOOK RETAINING GUIDE ⊗ WAS NOT ON A-606 YET WHEN THE FIRST CARRIER LANDING WAS MADE, THE LOWER WING TRAILING CUT-OUT AND A LONGER RESTRAINING LINE SERVED AS THE HOOK'S EXTENSION LIMIT, THIS ALLOWED THE LOWER POSITION SHOWN. (FIRST LANDING ONLY)
DRAWING No. 9-78-A
PLATE 2 of 3
HISTORICAL AVIATION ALBUM
AEROMARINE 39B
1918-1923
FIRST U.S. NAVY AIRCRAFT CARRIER LANDING
DATE - 26 OCT. 1922
AIRPLANE - AEROMARINE BuNo 606
PILOT - LCDR. GODFREY deC. CHEVALIER
SHIP - USS LANGLEY, CV-1
SCALE - ORIGINAL 1:24
REPRO. 1:48
DRAWN BY - PAUL R. MATT
© HISTORICAL AVIATION ALBUM 1971
P.O. BOX 33
TEMPLE CITY, CALIF. 91780

GENERAL SPECIFICATIONS

	LANDPLANE	SEAPLANE
WEIGHT EMPTY	1,350 lbs.	1,820 lbs.
USEFUL LOAD	700 lbs.	700 lbs.
GROSS WEIGHT	2,050 lbs.	2,520 lbs.
MAXIMUM SPEED	78 mph	68 mph
LANDING SPEED	48 mph	52 mph
CLIMB IN 10 MIN.	2,800 feet	2,300 feet
SERVICE CEILING	8,200 feet	7,000 feet
FUEL CAPACITY	38/40 gals.	38/40 gals.
OIL CAPACITY	3 gals.	3 gals.

POWER - CURTISS OXX-6, 100 h.p. AT 1550 r.p.m.

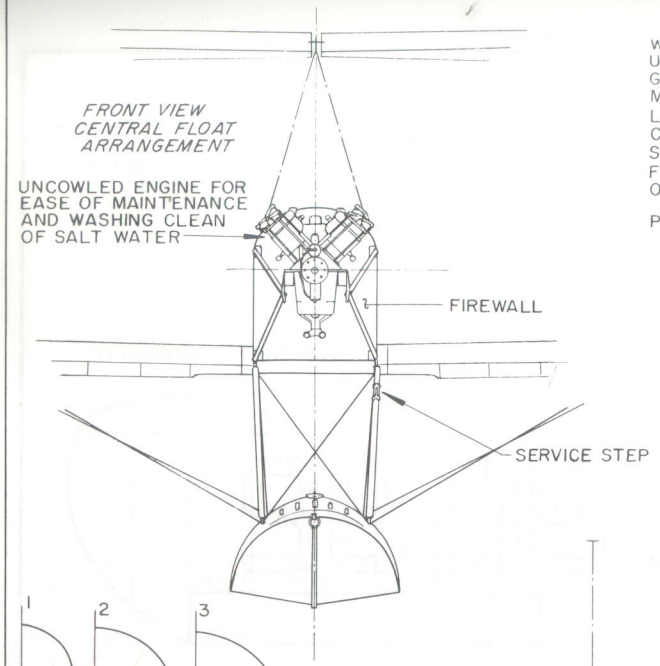

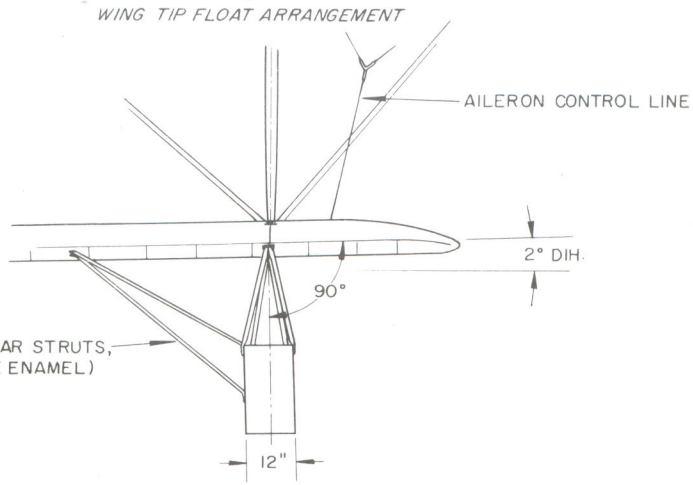

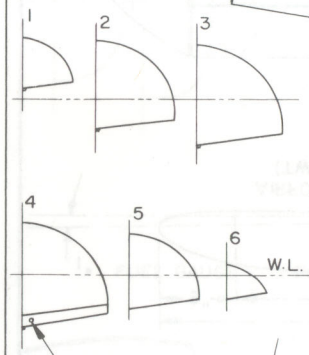

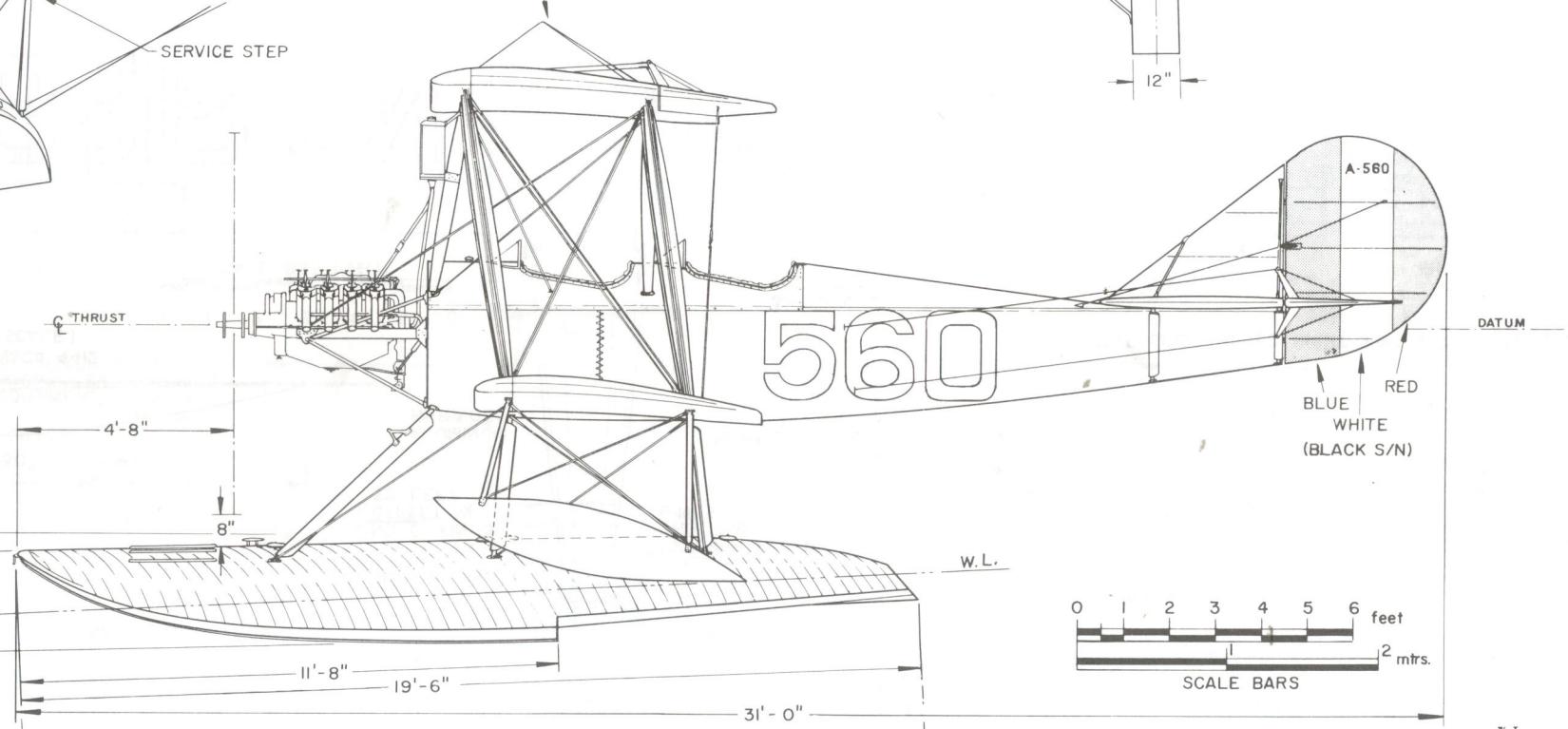

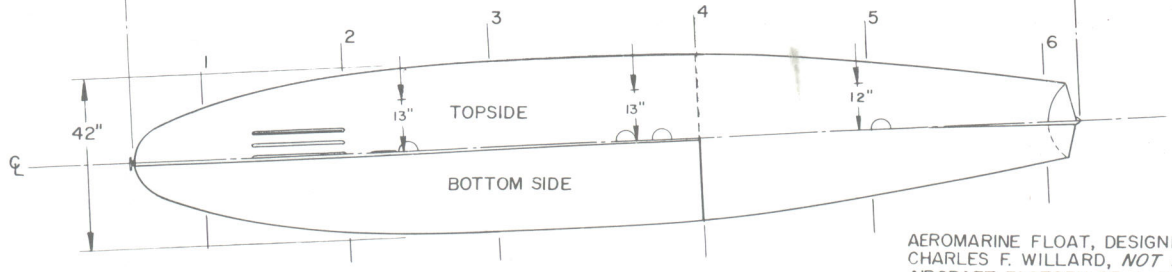

AEROMARINE FLOAT, DESIGNED BY CHARLES F. WILLARD, *NOT* A NAVAL AIRCRAFT FACTORY OR A H.C. RICHARDSON DESIGN.

HISTORICAL AVIATION ALBUM

AEROMARINE 39B

1918-1920

GENERAL ARRANGEMENT U.S. NAVY SEAPLANE TRAINER VERSION

SCALE - ORIGINAL 1:24
REPRO. 1:48

DRAWN BY - PAUL R. MATT

© HISTORICAL AVIATION ALBUM 1971
P.O. BOX 33
TEMPLE CITY, CALIF. 91780

DRAWING No. 9-78-A

GENERAL SPECIFICATIONS MODEL 7AC, 1945-46

WEIGHT EMPTY	710 lbs.
USEFUL LOAD	510 lbs.
GROSS WEIGHT	1220 lbs.
WING LOADING	7.2 lbs./sq. ft.
POWER LOADING	18.8 lbs./h.p.
BAGGAGE ALLOWANCE	20 lbs. - solo flying rear seat 40 lbs. - solo flying front seat
TOP SPEED	100 m.p.h.
CRUISING SPEED	90 m.p.h.
LANDING SPEED	35 m.p.h.
RATE OF CLIMB, INITIAL	500 ft./min.
FUEL CAPACITY	13 gallons
CRUISING RANGE	260 miles
POWER - CONTINENTAL C65-8	65 h.p. at 2,350 r.p.m.
(CRUISE)	53 h.p. at 2,150 r.p.m.

COLORING NOTES:
ENTIRE AIRCRAFT, CHROME YELLOW,
TRIM AND LICENSE NUMBERS, INTERNATIONAL ORANGE

AIRFOIL NACA 4412
(TWICE SCALE)

SCALE BAR (feet)

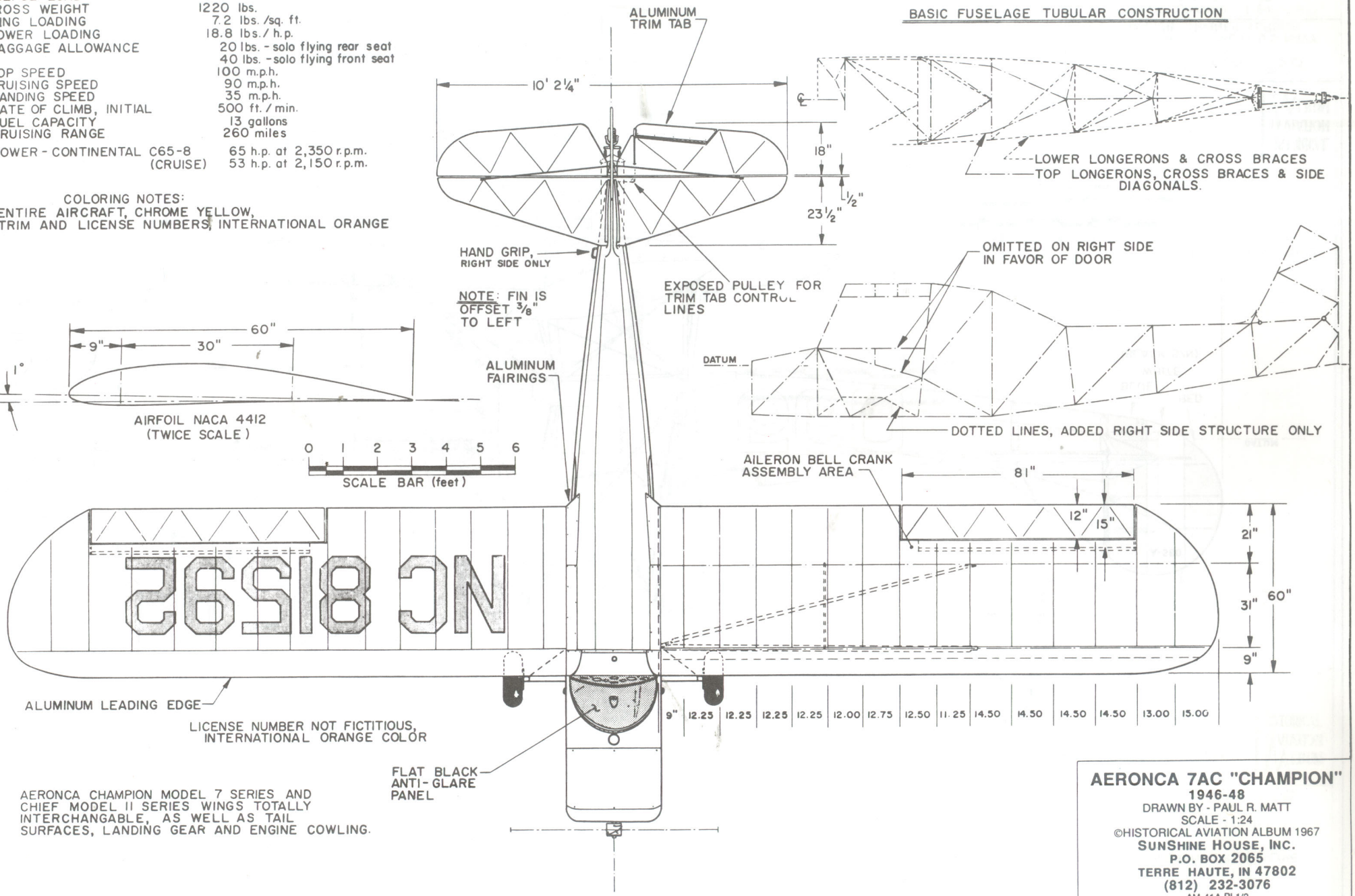

AERONCA CHAMPION MODEL 7 SERIES AND CHIEF MODEL II SERIES WINGS TOTALLY INTERCHANGABLE, AS WELL AS TAIL SURFACES, LANDING GEAR AND ENGINE COWLING.

AERONCA 7AC "CHAMPION"
1946-48
DRAWN BY - PAUL R. MATT
SCALE - 1:24
©HISTORICAL AVIATION ALBUM 1967
SUNSHINE HOUSE, INC.
P.O. BOX 2065
TERRE HAUTE, IN 47802
(812) 232-3076
AM-41A Pl.1/2

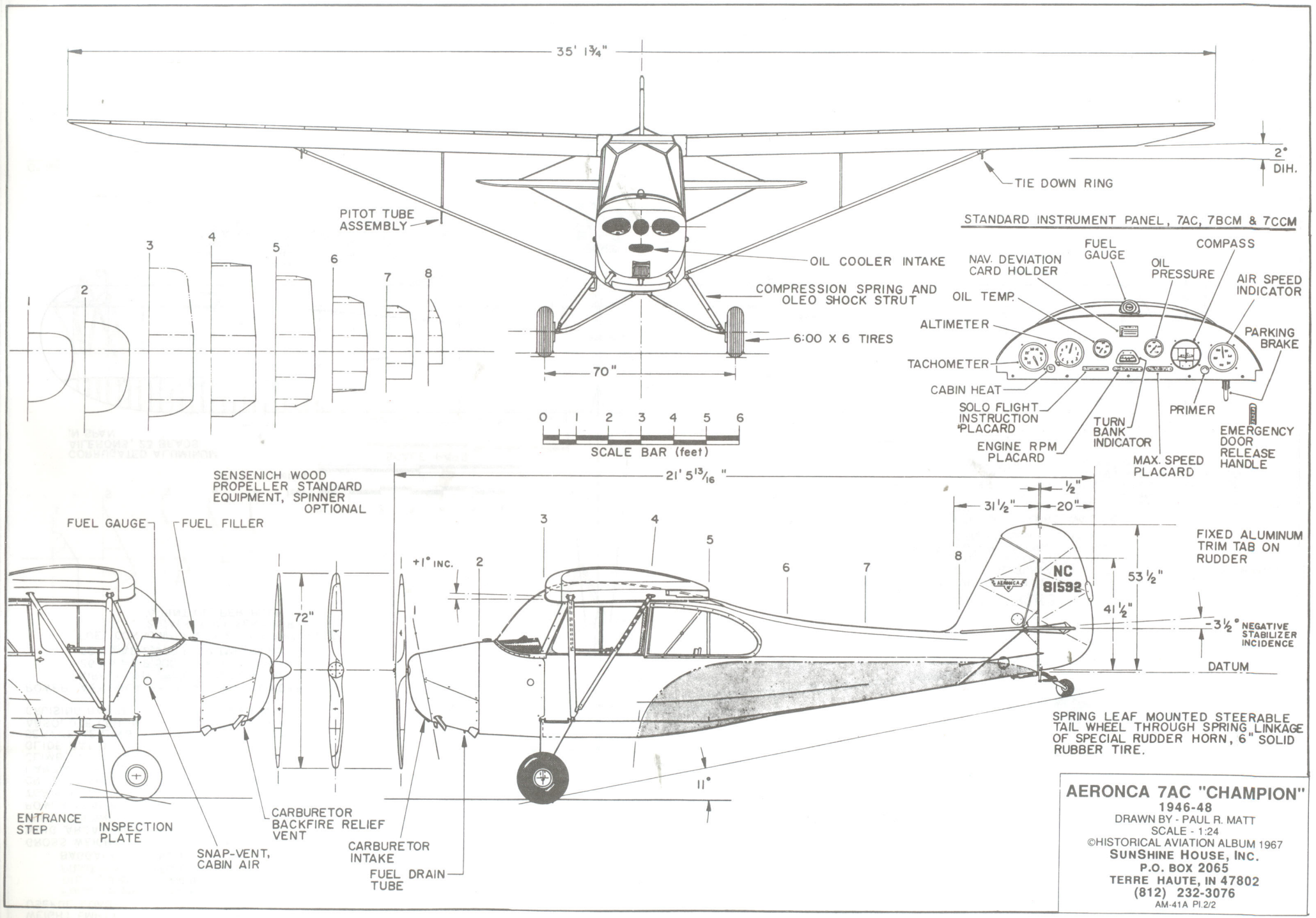

AERONCA 7AC "CHAMPION"
1946-48
DRAWN BY - PAUL R. MATT
SCALE - 1:24
©HISTORICAL AVIATION ALBUM 1967
SUNSHINE HOUSE, INC.
P.O. BOX 2065
TERRE HAUTE, IN 47802
(812) 232-3076
AM-41A Pl.2/2

GENERAL SPECIFICATIONS

WEIGHT EMPTY	398 lbs.
USEFUL LOAD	274 lbs.
FUEL (8 gals.) 45 lbs.	
OIL (5 qts.) 9.4 lbs.	
PILOT 170 lbs.	
BAGGAGE 50 lbs.	
GROSS WEIGHT	672 lbs.
WING AREA (incl. ailerons)	145.0 sq. ft.
WING LOADING	4.71 lbs./sq. ft.
POWER LOADING	25.8 lbs./h.p.
TOP SPEED	75 mph
CRUISING SPEED	60 mph
LANDING SPEED	32 mph
CLIMB, INITIAL, S.L.	600 ft./min.
GLIDE RATIO	11 to 1
SERVICE CEILING	16,500 feet
ABSOLUTE CEILING	20,000 feet
CRUISING RANGE	240 miles

POWER: AERONCA E-107-A, TWO CYLINDER, AIRCOOLED, SINGLE IGNITION ENGINE.
26 h.p AT 2,500 R.P.M. (CAA RATING)
30 h.p. AT 2,500 R.P.M. (MFGRs RATING)

FUEL CONSUMPTION AT 2,100 R.P.M. CRUISE,
2 GALS. FUEL PER HOUR
1/2 PINT OIL PER HOUR

HORIZONTAL TAIL SURFACES REMAINED THE SAME ON ALL C-2 & C-3 TYPE AIRCRAFT

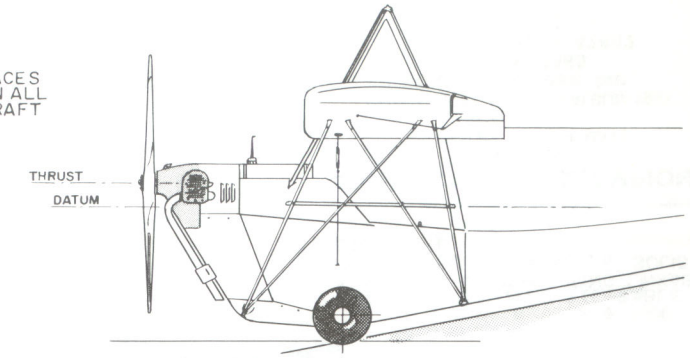

TYPICAL C-2 MODEL EMPLOYING 14" BALLOON TIRES

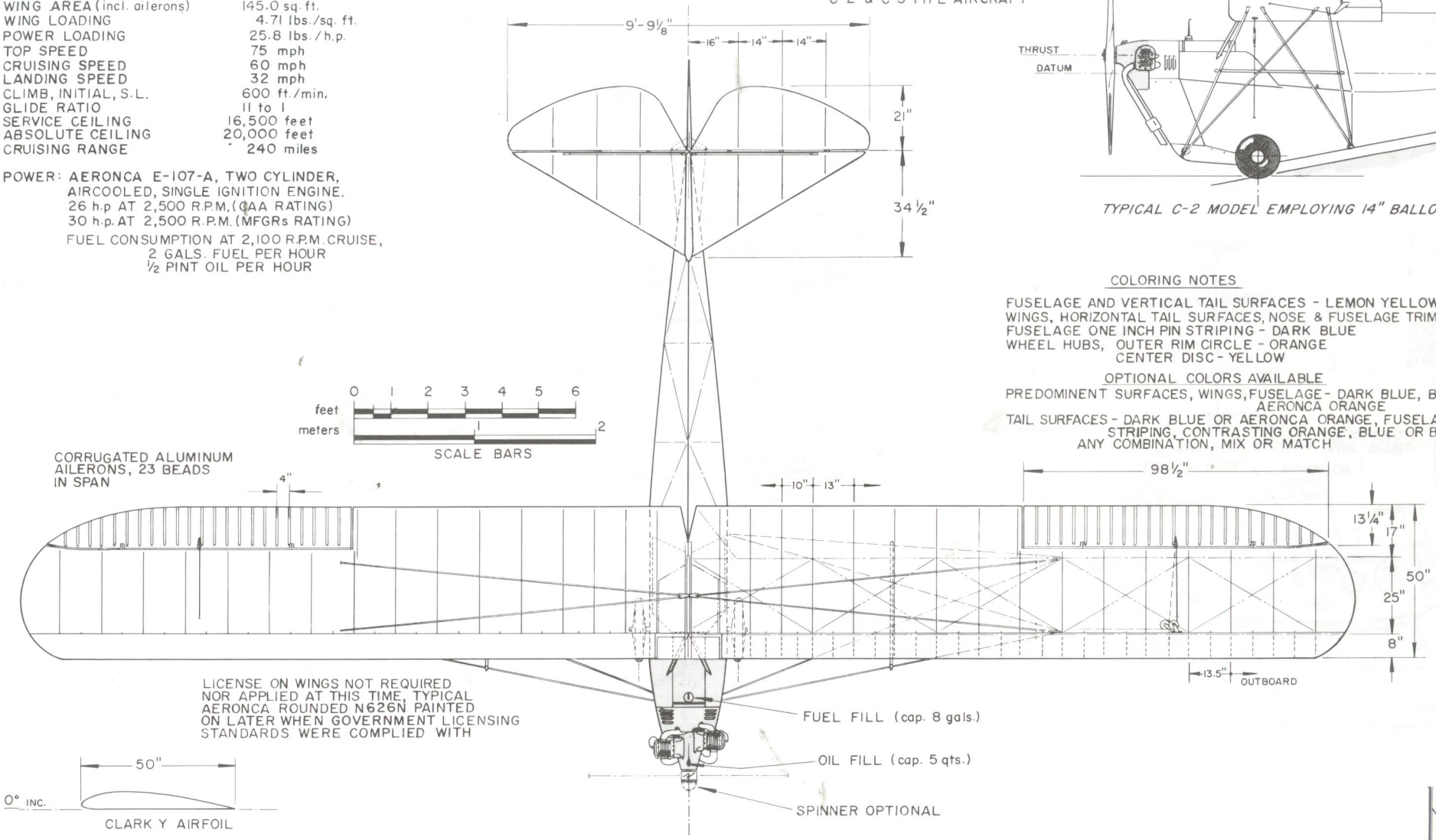

LICENSE ON WINGS NOT REQUIRED NOR APPLIED AT THIS TIME, TYPICAL AERONCA ROUNDED N626N PAINTED ON LATER WHEN GOVERNMENT LICENSING STANDARDS WERE COMPLIED WITH

COLORING NOTES

FUSELAGE AND VERTICAL TAIL SURFACES - LEMON YELLOW
WINGS, HORIZONTAL TAIL SURFACES, NOSE & FUSELAGE TRIM - ORANGE
FUSELAGE ONE INCH PIN STRIPING - DARK BLUE
WHEEL HUBS, OUTER RIM CIRCLE - ORANGE
CENTER DISC - YELLOW

OPTIONAL COLORS AVAILABLE

PREDOMINENT SURFACES, WINGS, FUSELAGE - DARK BLUE, BLACK OR AERONCA ORANGE
TAIL SURFACES - DARK BLUE OR AERONCA ORANGE, FUSELAGE TRIM STRIPING, CONTRASTING ORANGE, BLUE OR BLACK
ANY COMBINATION, MIX OR MATCH

HISTORICAL AVIATION ALBUM

AERONCA C-2

1929

FIRST PRODUCTION AIRCRAFT

SCALE: ORIGINAL 1:24
REPRO. 1:48

DRAWN BY: PAUL R. MATT

© HISTORICAL AVIATION ALBUM 1971
P.O. BOX 33
TEMPLE CITY, CALIF. 91780

OUR SINCERE APPRECIATION IS EXTENDED TO MR JOHN HOUSER, SERVICE ENGINEER, AERONCA, INC. FOR HIS UNTIRING HELP IN MAKING THESE DRAWINGS POSSIBLE.

DRAWING No. 10-80-A

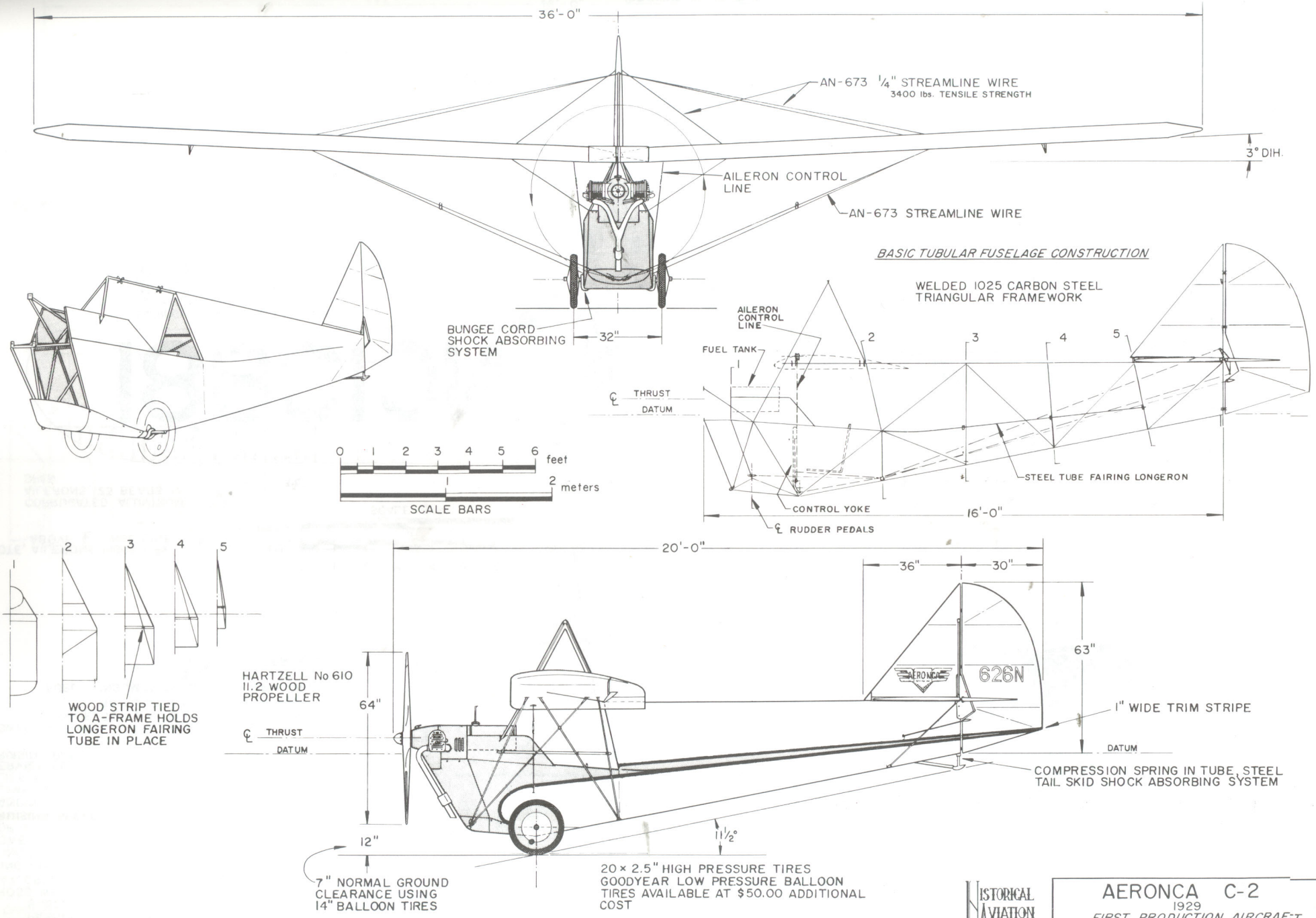

DRAWINGS PREPARED FROM AERONCA DRAWINGS No 5000 AND RELATED OF JULY 1929

HISTORICAL AVIATION ALBUM

AERONCA C-2

1929

FIRST PRODUCTION AIRCRAFT

SCALE: ORIGINAL 1:24
REPRO. 1:48

DRAWN BY: PAUL R. MATT

© HISTORICAL AVIATION ALBUM 1971
P.O. BOX 33
TEMPLE CITY, CALIF. 91780

DRAWING No 10-80-A

GENERAL SPECIFICATIONS

WEIGHT EMPTY		466 lbs.
USEFUL LOAD		411 lbs.
FUEL (8 gals.)	48 lbs.	
OIL (3 qts.)	6 lbs.	
PILOT	170 lbs.	
PASSENGER	170 lbs.	
BAGGAGE	20 lbs.	
GROSS WEIGHT		877 lbs.
MAX. GROSS WEIGHT		900 lbs.
WING AREA, incl. ailerons		142.2 sq. ft.
WING LOADING		6.15 lbs./sq. ft.
POWER LOADING		25.0 lbs./h.p.
TOP SPEED		82 m.p.h.
CRUISING SPEED		70 m.p.h.
LANDING SPEED		35 m.p.h.
CLIMB, INITIAL, S.L.		450 ft./min.
GLIDE RATIO		10 to 1
SERVICE CEILING		12,000 feet
CRUISING RANGE		200 miles

POWER: AERONCA E-113A, TWO CYLINDER, SINGLE IGNITION ENGINE, 36 h.p. AT 2,400 R.P.M. (CAA RATING)
40 h.p. AT 2,500 R.P.M. (MFGR's RATING)

FUEL CONSUMPTION AT 2,100 R.P.M. CRUISE,
3 GAL. FUEL PER HOUR
¼ PINT OIL PER HOUR

HORIZONTAL TAIL SURFACES REMAINED THE SAME ON ALL C-2 & C-3 TYPE AIRCRAFT

TYPICAL ENGINE MOUNT & FORWARD INTERNAL STRUCTURE OF C-3 SERIES

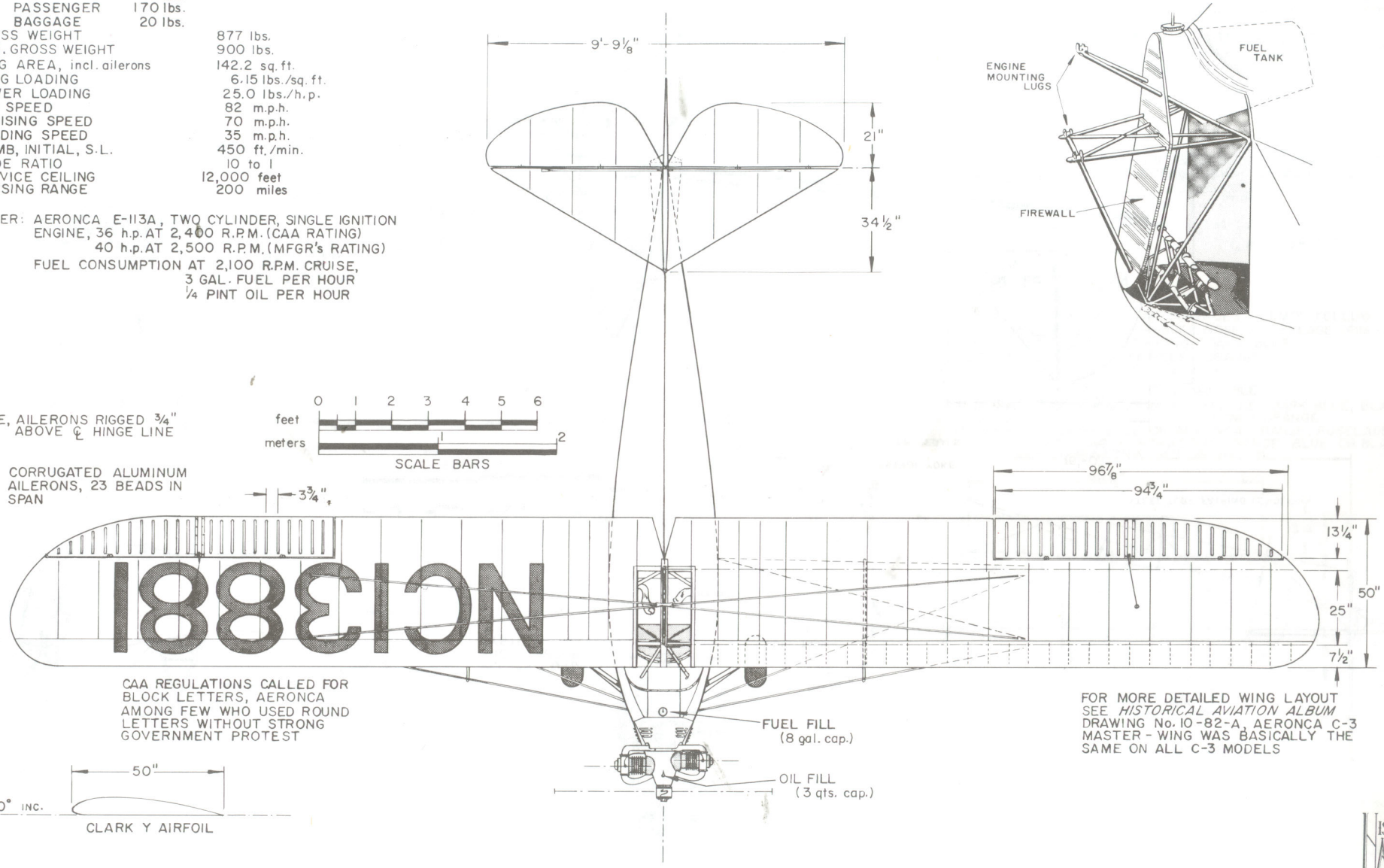

FOR MORE DETAILED WING LAYOUT SEE *HISTORICAL AVIATION ALBUM* DRAWING No. 10-82-A, AERONCA C-3 MASTER-WING WAS BASICALLY THE SAME ON ALL C-3 MODELS

COLORING NOTES

ENTIRE FUSELAGE & VERTICAL TAIL SURFACES - DARK NAVY BLUE OR BLACK
ONE INCH PIN STRIPING - AERONCA 'INTERNATIONAL' ORANGE OR LEMON YELLOW
WINGS & HORIZONTAL TAIL SURFACES - AERONCA ORANGE OR LEMON YELLOW
LICENSE NUMBERS - BLACK ON WINGS, ORANGE OR YELLOW ON RUDDER

OTHER COLOR COMBINATIONS OPTIONAL

OUR SINCERE APPRECIATION IS EXTENDED TO MR. JOHN HOUSER, SERVICE ENGINEER, AERONCA INC., FOR HIS PERSONAL INTEREST IN HELPING TO MAKE THESE DRAWINGS POSSIBLE.

HISTORICAL AVIATION ALBUM

AERONCA C-3 COLLEGIAN

1934 "RAZORBACK"

SCALE: ORIGINAL 1:24
REPRO. 1:48

DRAWN BY: PAUL R. MATT

© HISTORICAL AVIATION ALBUM 1971
P.O. BOX 33
TEMPLE CITY, CALIF. 91780

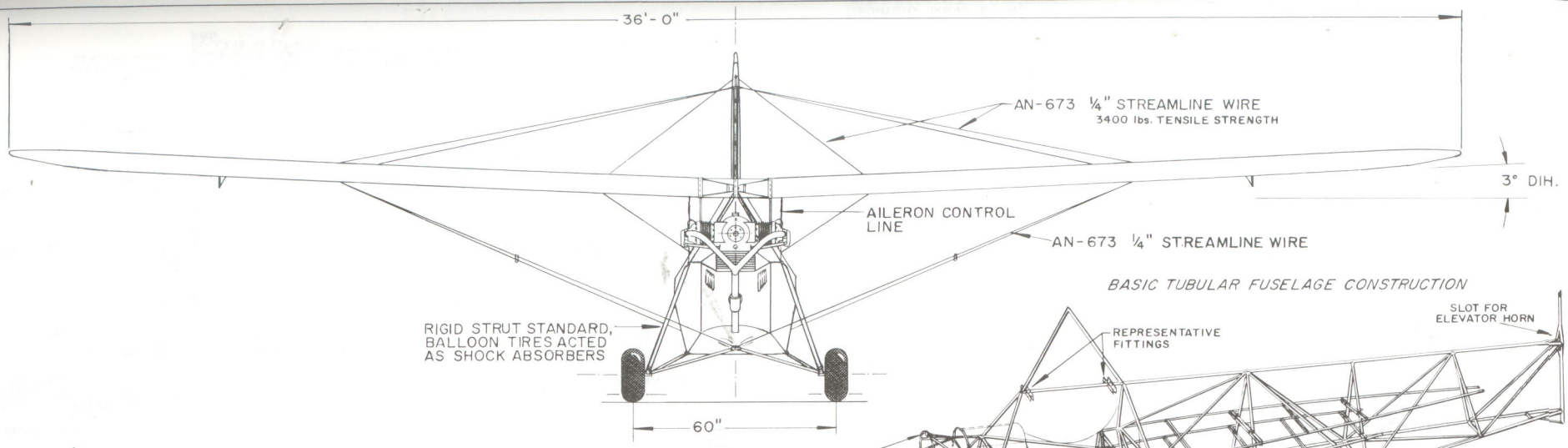

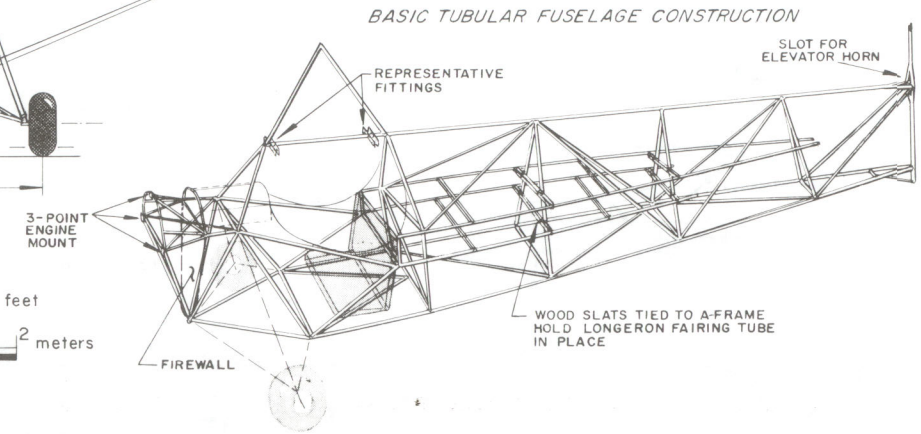

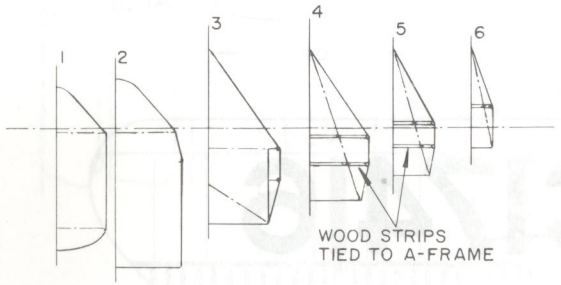

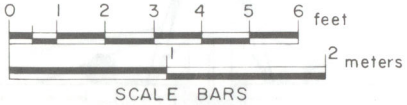

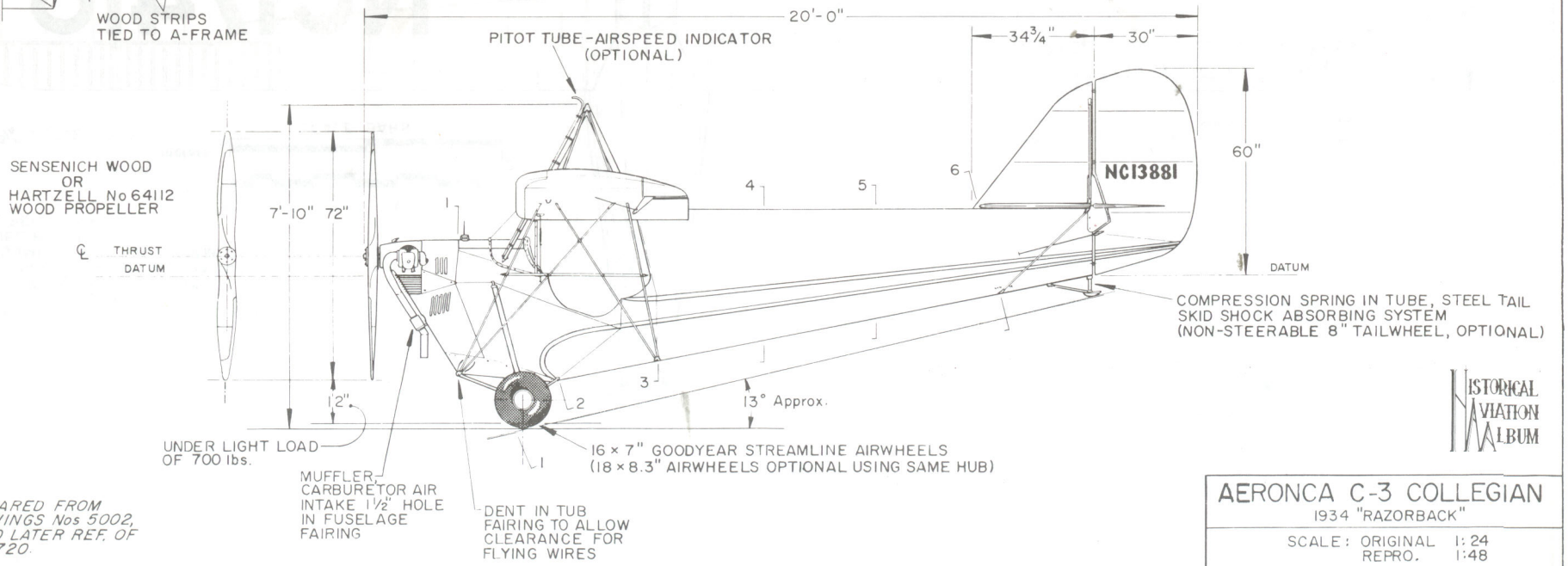

DRAWINGS PREPARED FROM AERONCA DRAWINGS Nos 5002, 5027, 5035 AND LATER REF. OF 5700, 5716 & 5720.

HISTORICAL AVIATION ALBUM

AERONCA C-3 COLLEGIAN

1934 "RAZORBACK"

SCALE: ORIGINAL 1:24
REPRO. 1:48

DRAWN BY: PAUL R. MATT

© HISTORICAL AVIATION ALBUM 1971
P.O. BOX 33
TEMPLE CITY, CALIF. 91780

DRAWING No. 10-81-A

GENERAL SPECIFICATIONS

WEIGHT EMPTY	569 lbs.
USEFULL LOAD	437 lbs.
FUEL (8 gals.)	48 lbs.
OIL (3 qts.)	6 lbs.
PILOT	170 lbs.
PASSENGER	170 lbs.
BAGGAGE	43 lbs.
GROSS WEIGHT	1,006 lbs.
WING AREA, incl. ailerons	142.2 sq. ft.
WING LOADING	7.06 lbs./sq. ft.
POWER LOADING	25.1 lbs./sq. ft.
TOP SPEED	93 m.p.h.
CRUISING SPEED	85 m.p.h.
LANDING SPEED	35 m.p.h.
CLIMB, INITIAL S.L.	450 ft./min.
GLIDE RATIO	10 to 1
SERVICE CEILING	12,000 feet
CRUISING RANGE	200 miles

POWER: AERONCA E-113B, 2 CYLINDER, AIR COOLED, SINGLE IGNITION, ENGINE, RATED
36 H.P. AT 2400 R.P.M. (CAA RATING)
40 H.P. AT 2500 R.P.M. (MFGRs RATING)
FUEL CONSUMPTION AT 2100 R.P.M. CRUISE,
3 GALS. FUEL PER HOUR
1/4 PINT OIL PER HOUR

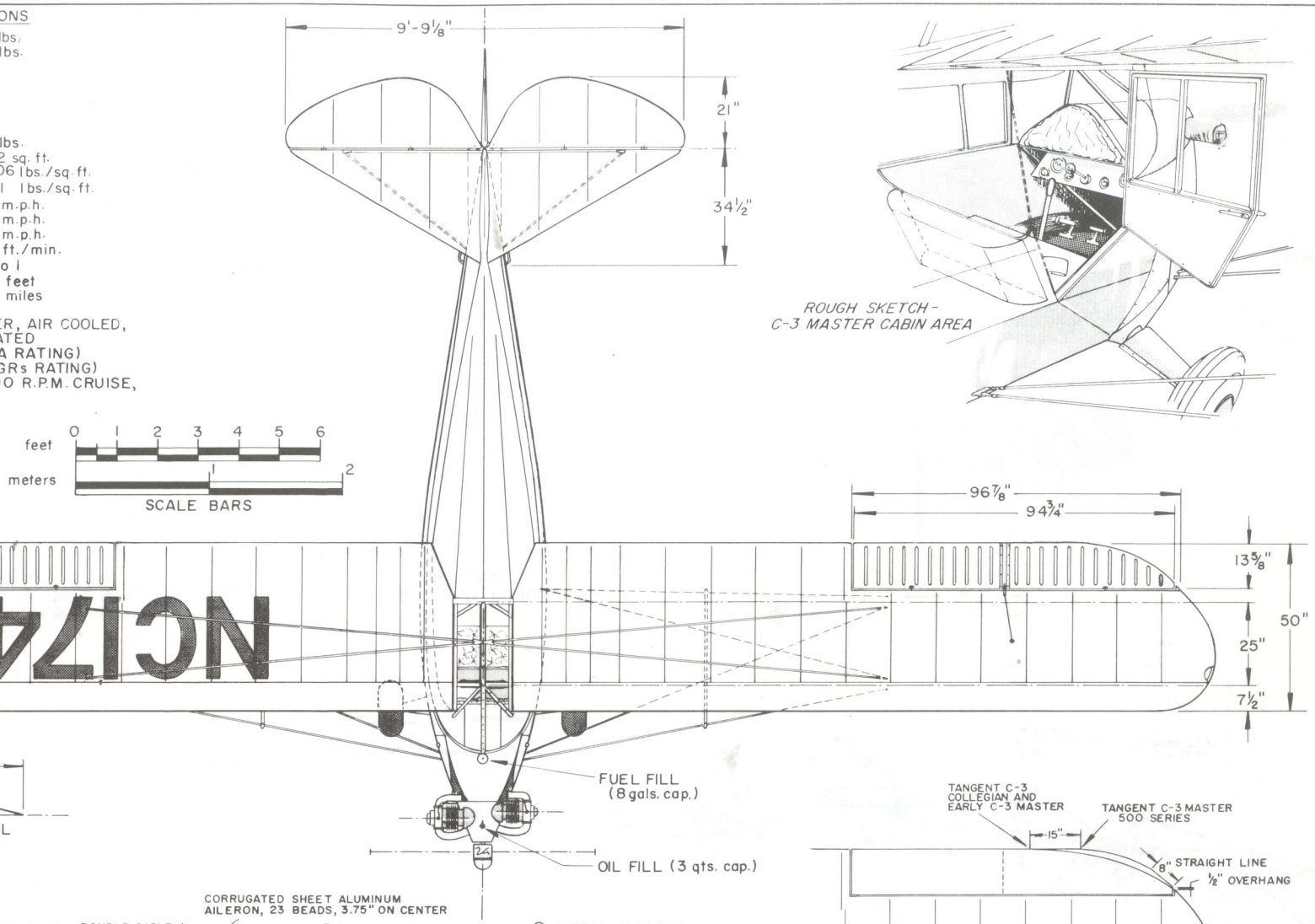

ROUGH SKETCH - C-3 MASTER CABIN AREA

SCALE BARS

AILERONS RIGGED 3/4" ABOVE ℄ HINGE LINE

CLARK Y AIRFOIL

WING CONSTRUCTION
SPARS - SOLID SPRUCE
RIBS - BUILT UP SPRUCE WOOD TRUSS, SOLID SPRUCE COMPRESSION RIBS
FABRIC COVERED

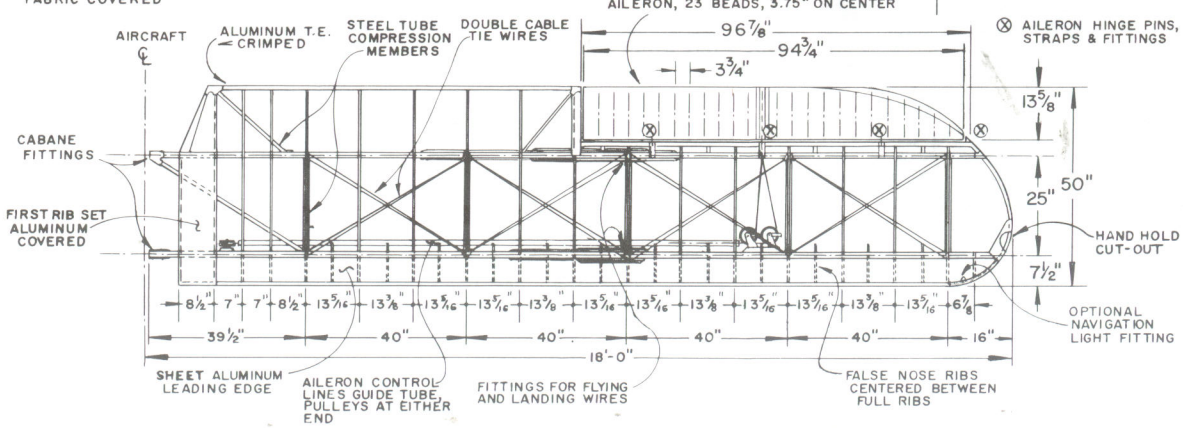

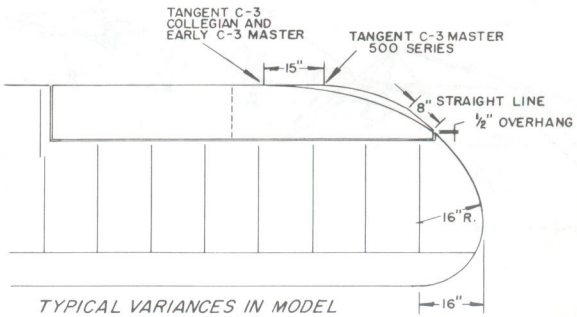

TYPICAL VARIANCES IN MODEL C-3 AILERONS

HISTORICAL AVIATION ALBUM

AERONCA C-3 MASTER

1935-36 "500" SERIES 'ROUNDBACK'

SCALE: ORIGINAL 1:24
REPRO. 1:48
DRAWN BY: PAUL R. MATT

© HISTORICAL AVIATION ALBUM 1971
P. O. BOX 33
TEMPLE CITY, CALIF. 91780

DRAWING No. 10-82-A

PLATE 1 of 2

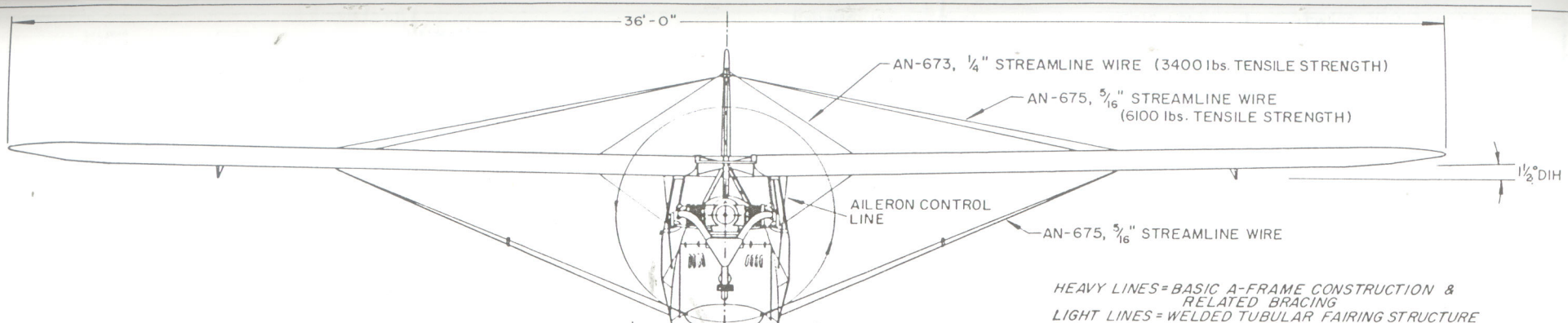

BULKHEAD FORMERS 1 THROUGH 6, 1/4" PLYWOOD STRAPED TO TRIANGULAR TUBING STRUCTURE, STATIONS 1 THROUGH 4 HAD SHORT EXTENSION TUBES WELDED ABOVE A-FRAME APEX, RANGING FROM 5/16" AT STA. 4 TO 2" AT STA. 1.

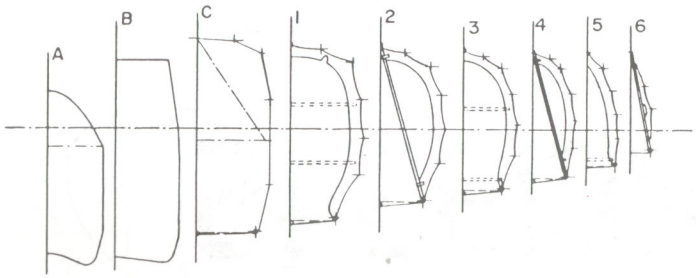

HEAVY LINES = BASIC A-FRAME CONSTRUCTION & RELATED BRACING
LIGHT LINES = WELDED TUBULAR FAIRING STRUCTURE
VERTICAL MEMBERS 1 THROUGH 6, 1/4" PLYWOOD BULKHEAD FORMERS ATTACHED TO TUBE FRAME

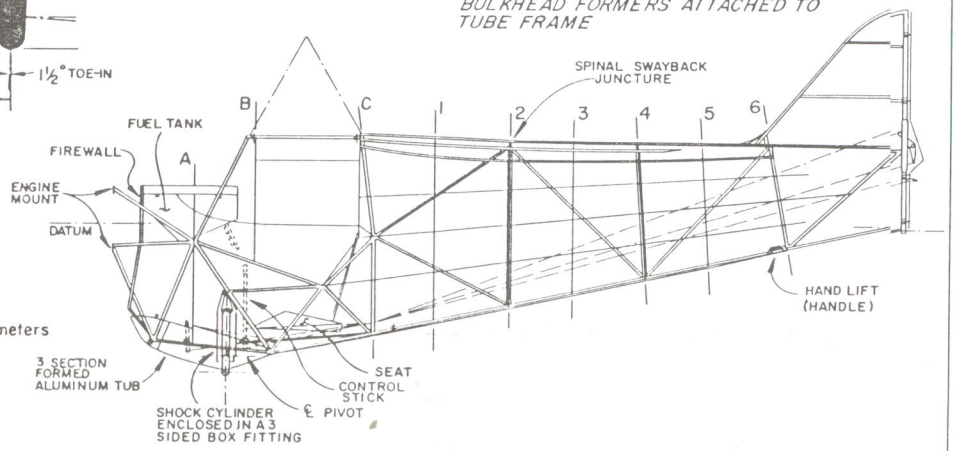

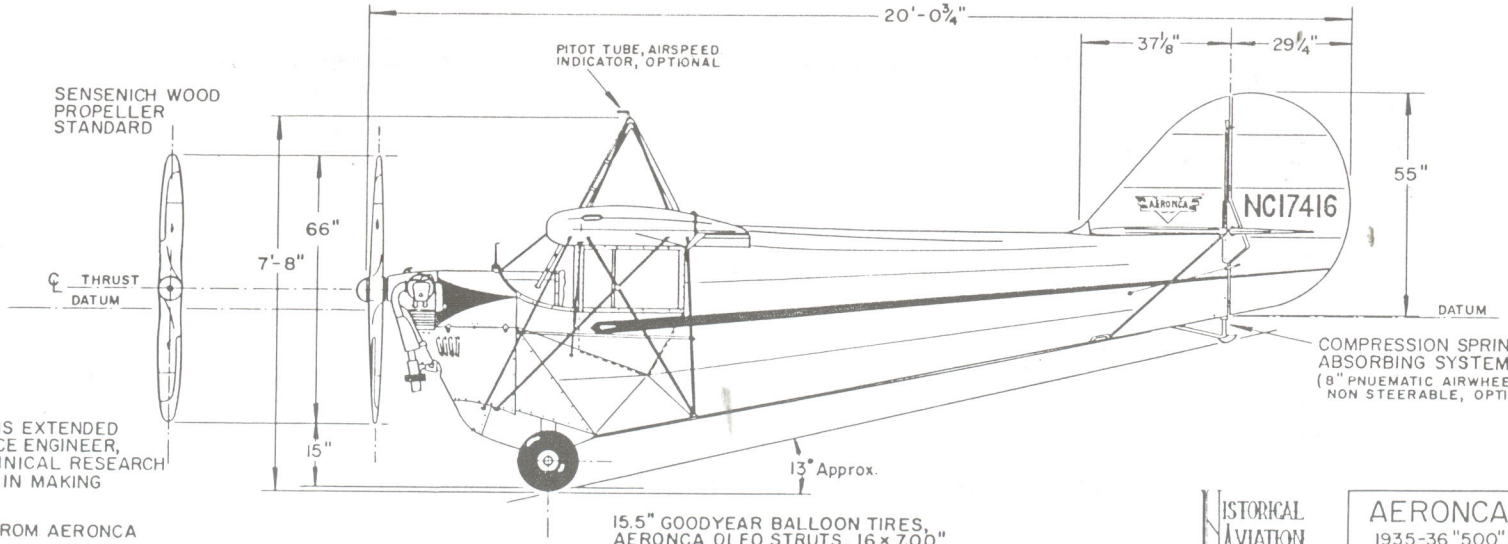

OUR SINCERE APPRECIATION IS EXTENDED TO MR. JOHN HOUSER, SERVICE ENGINEER, AERONCA INC., FOR HIS TECHNICAL RESEARCH AND PERSONAL ATTENTION IN MAKING THESE DRAWINGS POSSIBLE

DRAWINGS PREPARED FROM AERONCA DRAWINGS NOs. 5030
5700
5716
5720
5727
AND RELATED PRINTS

15.5" GOODYEAR BALLOON TIRES, AERONCA OLEO STRUTS, 16 × 7.00" GOODYEAR STREAMLINE *AIRWHEELS* AND BRAKES, OPTIONAL
(SPECIAL 18 × 8.3" TIRES ALSO OPTIONAL)

HISTORICAL AVIATION ALBUM

AERONCA C-3 MASTER

1935-36 "500" SERIES 'ROUNDBACK'

SCALE: ORIGINAL 1:24
REPRO. 1:48
DRAWN BY: PAUL R. MATT

© HISTORICAL AVIATION ALBUM 1971
P.O. BOX 33
TEMPLE CITY, CALIF. 91780

DRAWING No. 10-82-A

GENERAL SPECIFICATIONS

WEIGHT EMPTY	590 lbs.
USEFUL LOAD	450 lbs.
PAYLOAD	(360 lbs.)
GROSS WEIGHT	1,040 lbs.
WING AREA	146.35 sq. ft.
WING LOADING	7.13 lbs./sq. ft.
POWER LOADING	26.0 lbs./h.p.
TOP SPEED	78 mph
CRUISING SPEED	70 mph
LANDING SPEED	38 mph
INITIAL CLIMB, S.L.	400 ft./min.
FUEL CAPACITY	10 gals.
OIL CAPACITY	3 qts.
CRUISING RANGE at 4 gals/hr.	175 miles
SERVICE CEILING	13,000 feet

POWER, MODEL K AERONCA E-113C 37/40 H.P.

(MODEL KC, CONTINENTAL A-40-A OF 40 H.P. HAD SIMILAR PERFORMANCE)

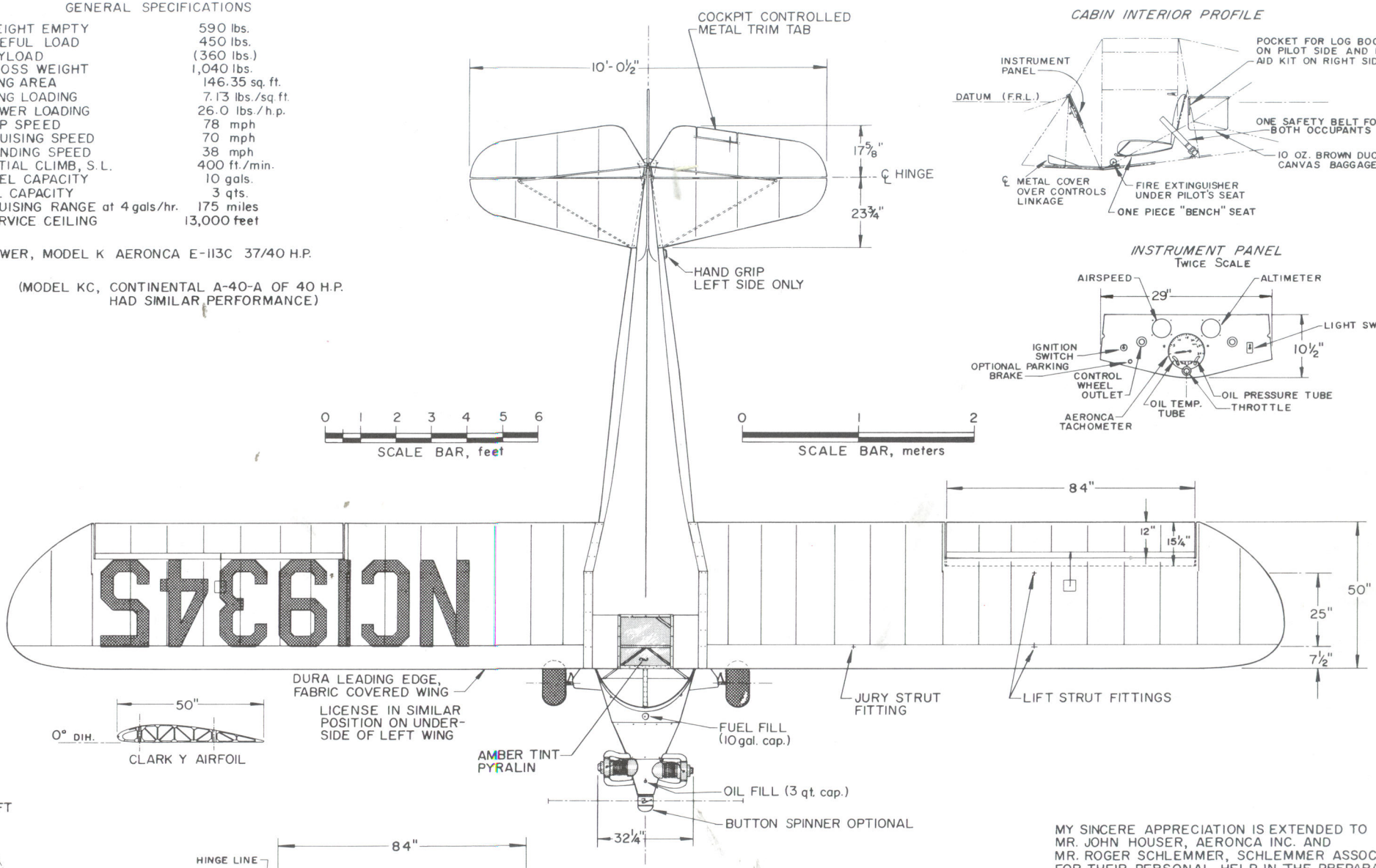

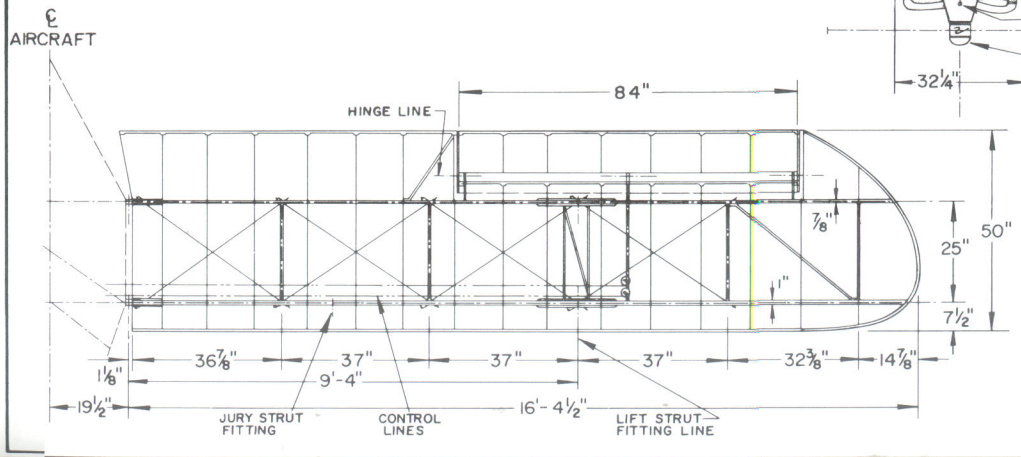

CABIN INTERIOR PROFILE

INSTRUMENT PANEL

Twice Scale

MY SINCERE APPRECIATION IS EXTENDED TO MR. JOHN HOUSER, AERONCA INC. AND MR. ROGER SCHLEMMER, SCHLEMMER ASSOCS., FOR THEIR PERSONAL HELP IN THE PREPARATION OF THESE DRAWINGS.

Paul R. Matt

COLORING NOTES

ENTIRE AIRCRAFT - LOENING YELLOW
TRIM - BLACK
AIRCRAFT GRADE BA-24 COTTON FABRIC COVERED, FOUR COATS CELLULOSE NITRATE DOPE. FIRST COAT BRUSHED, REMAINING COATS SPRAYED.

HISTORICAL AVIATION ALBUM

AERONCA MODEL K

1937

SCALE - ORIGINAL 1:24
REPRO. 1:48
DRAWN BY - PAUL R. MATT

© HISTORICAL AVIATION ALBUM 1977
P.O. BOX 33
TEMPLE CITY, CALIF., 91780

DRAWING No. 15-103-A

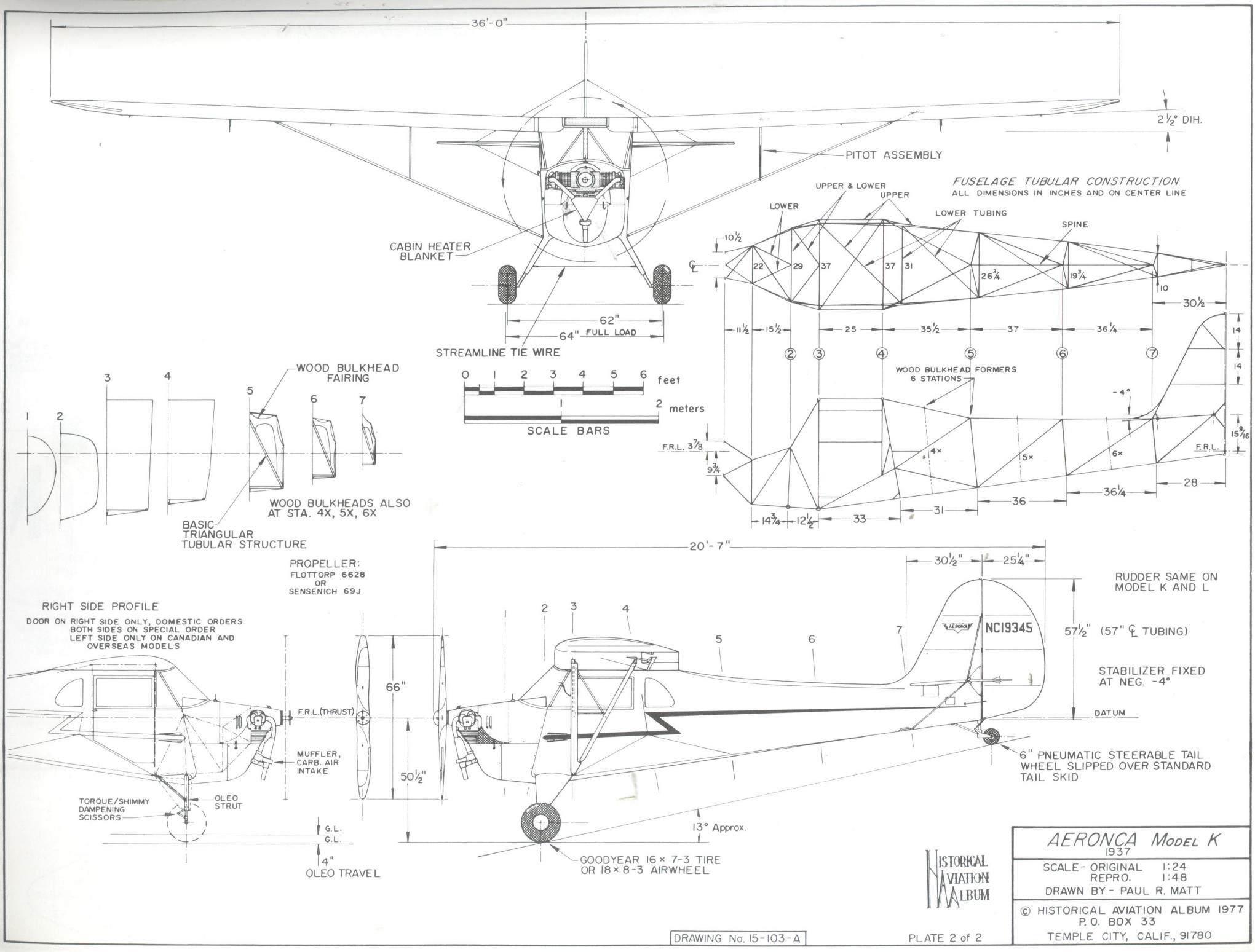
36'-0"
2½° DIH.
PITOT ASSEMBLY
CABIN HEATER BLANKET
STREAMLINE TIE WIRE
62"
64" FULL LOAD
FUSELAGE TUBULAR CONSTRUCTION
ALL DIMENSIONS IN INCHES AND ON CENTER LINE
UPPER & LOWER
UPPER
LOWER
LOWER TUBING
SPINE
WOOD BULKHEAD FORMERS 6 STATIONS
F.R.L. 3⅞
F.R.L.
WOOD BULKHEAD FAIRING
WOOD BULKHEADS ALSO AT STA. 4X, 5X, 6X
BASIC TRIANGULAR TUBULAR STRUCTURE
SCALE BARS
feet
meters
PROPELLER: FLOTTORP 6628 OR SENSENICH 69J
RIGHT SIDE PROFILE
DOOR ON RIGHT SIDE ONLY, DOMESTIC ORDERS
BOTH SIDES ON SPECIAL ORDER
LEFT SIDE ONLY ON CANADIAN AND OVERSEAS MODELS
F.R.L. (THRUST)
MUFFLER, CARB. AIR INTAKE
TORQUE/SHIMMY DAMPENING SCISSORS
OLEO STRUT
G.L.
4" OLEO TRAVEL
66"
50½"
20'-7"
30½"
25¼"
RUDDER SAME ON MODEL K AND L
NC19345
57½" (57" ℄ TUBING)
STABILIZER FIXED AT NEG. -4°
DATUM
6" PNEUMATIC STEERABLE TAIL WHEEL SLIPPED OVER STANDARD TAIL SKID
13° Approx.
GOODYEAR 16 × 7-3 TIRE OR 18 × 8-3 AIRWHEEL
HISTORICAL AVIATION ALBUM
AERONCA MODEL K
1937
SCALE - ORIGINAL 1:24
REPRO. 1:48
DRAWN BY - PAUL R. MATT
© HISTORICAL AVIATION ALBUM 1977
P.O. BOX 33
TEMPLE CITY, CALIF., 91780
DRAWING No. 15-103-A
PLATE 2 of 2

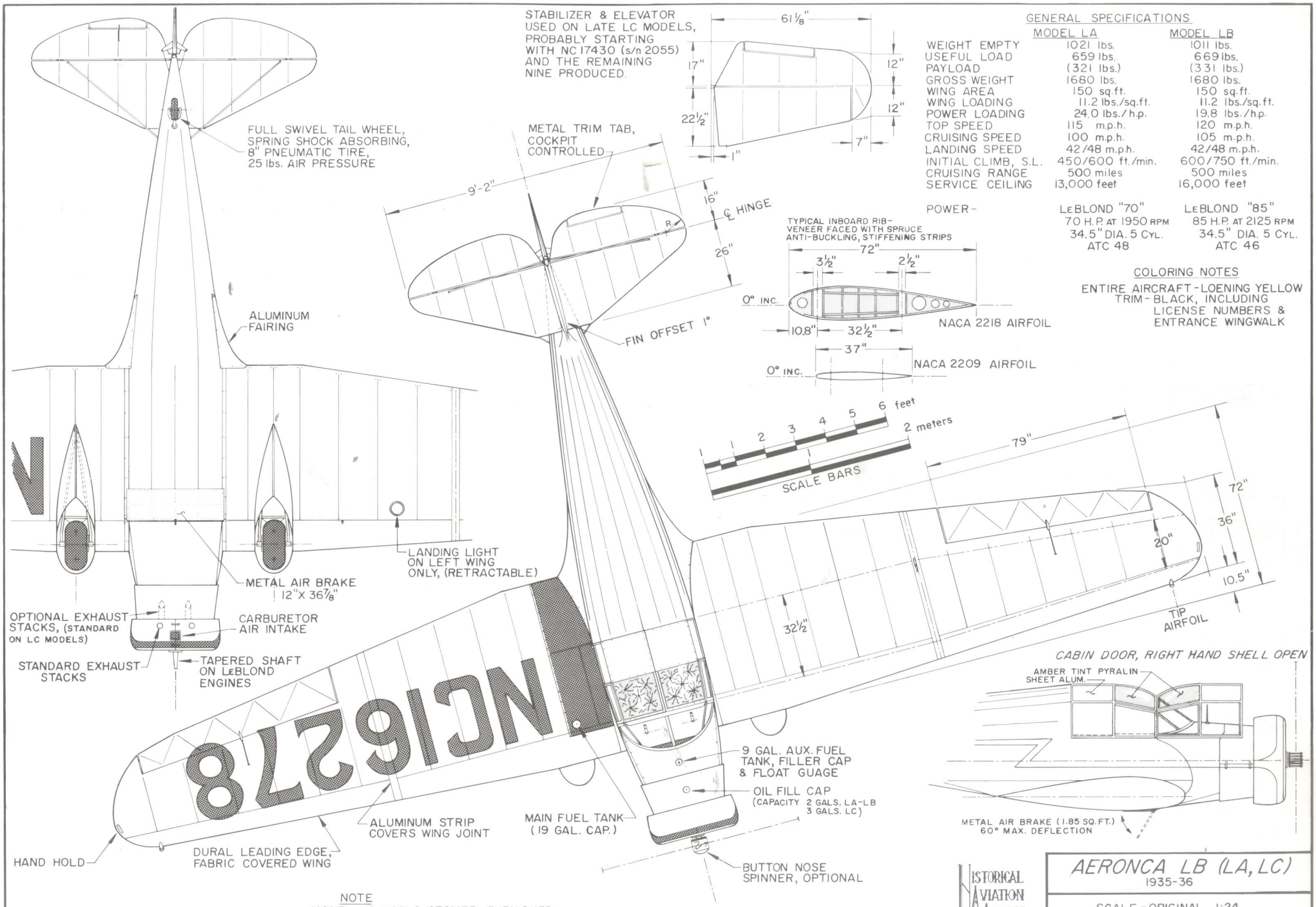

GENERAL SPECIFICATIONS

	MODEL LA	MODEL LB
WEIGHT EMPTY	1021 lbs.	1011 lbs.
USEFUL LOAD	659 lbs.	669 lbs.
PAYLOAD	(321 lbs.)	(331 lbs.)
GROSS WEIGHT	1680 lbs.	1680 lbs.
WING AREA	150 sq.ft.	150 sq.ft.
WING LOADING	11.2 lbs./sq.ft.	11.2 lbs./sq.ft.
POWER LOADING	24.0 lbs./h.p.	19.8 lbs./h.p.
TOP SPEED	115 m.p.h.	120 m.p.h.
CRUISING SPEED	100 m.p.h.	105 m.p.h.
LANDING SPEED	42/48 m.p.h.	42/48 m.p.h.
INITIAL CLIMB, S.L.	450/600 ft./min.	600/750 ft./min.
CRUISING RANGE	500 miles	500 miles
SERVICE CEILING	13,000 feet	16,000 feet
POWER -	LeBLOND "70" 70 H.P. AT 1950 RPM 34.5" DIA. 5 CYL. ATC 48	LeBLOND "85" 85 H.P. AT 2125 RPM 34.5" DIA. 5 CYL. ATC 46

COLORING NOTES

ENTIRE AIRCRAFT - LOENING YELLOW
TRIM - BLACK, INCLUDING LICENSE NUMBERS & ENTRANCE WINGWALK

NOTE

MODEL LC HAD CUSTOMER FURNISHED WARNER 90 H.P. SCARAB ENGINE INSTALLED, AIRFRAME WAS NOT CHANGED, TOOK A DIFFERENT ENGINE MOUNT, ENGINE AND COWLING LARGER IN DIAMETER, 36.5" DIA. CARBURETION, FUEL PUMP AND EXHAUST MANIFOLD ALSO CHANGED.

NOTE

THIS IS A REVISED DRAWING AND REPLACES AM-60-A

HISTORICAL AVIATION ALBUM

AERONCA LB (LA, LC)

1935-36

SCALE - ORIGINAL 1:24
REPRO. 1:48

DRAWN BY - PAUL R. MATT

© HISTORICAL AVIATION ALBUM, 1977
P.O. BOX 33
TEMPLE CITY, CALIF. 91780

DRAWING No. 15-60-A

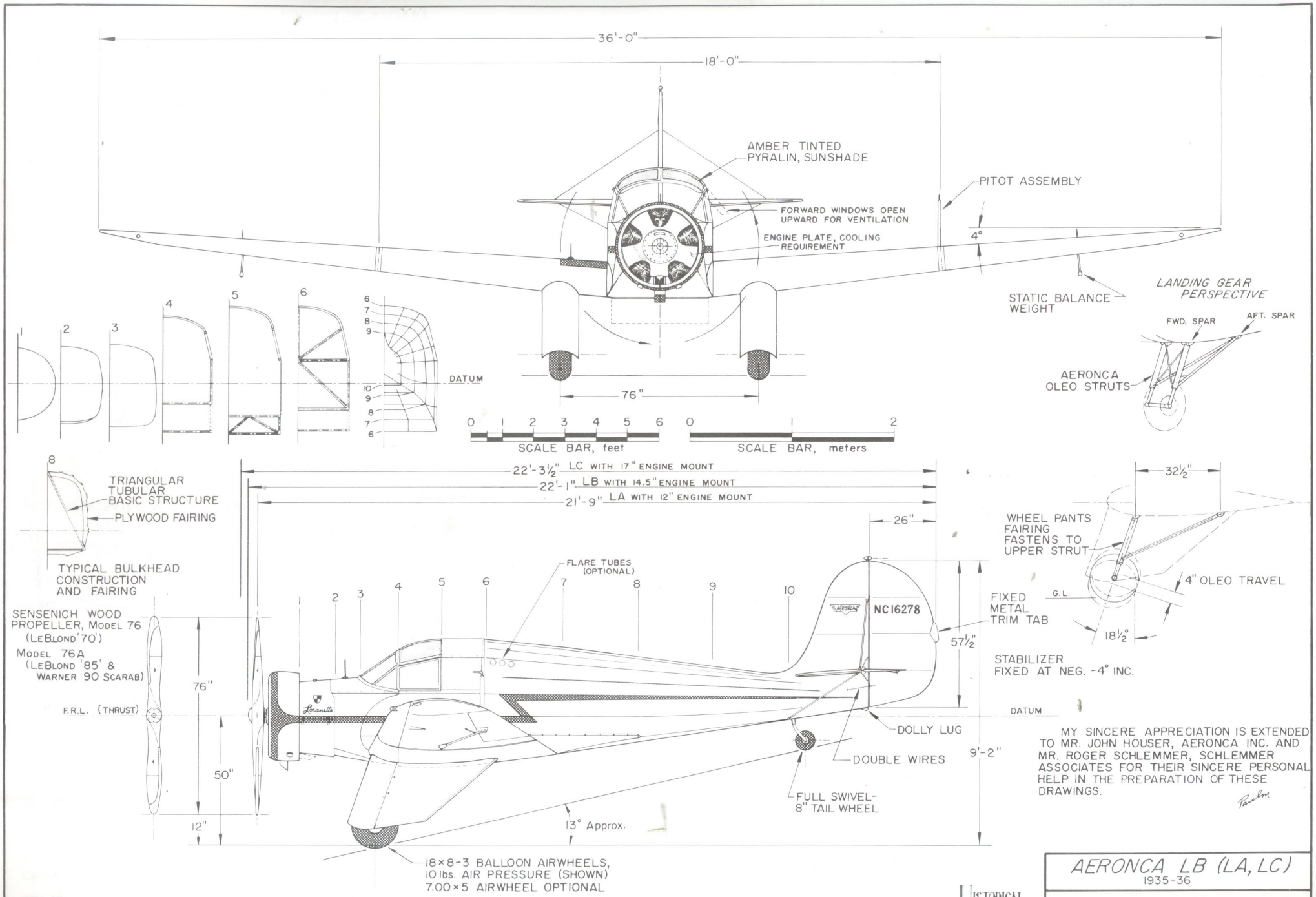

MY SINCERE APPRECIATION IS EXTENDED TO MR. JOHN HOUSER, AERONCA INC. AND MR. ROGER SCHLEMMER, SCHLEMMER ASSOCIATES FOR THEIR SINCERE PERSONAL HELP IN THE PREPARATION OF THESE DRAWINGS.

NOTE
THIS IS A REVISED DRAWING AND REPLACES AM-60-A

HISTORICAL AVIATION ALBUM

AERONCA LB (LA, LC)
1935-36

SCALE - ORIGINAL 1:24
REPRO. 1:48
DRAWN BY - PAUL R. MATT

© HISTORICAL AVIATION ALBUM 1977
P.O. BOX 33
TEMPLE CITY, CALIF. 91780

DRAWING No. 15-60-A

GENERAL SPECIFICATIONS

WEIGHT EMPTY		4141 lbs.
USEFUL LOAD		2059 lbs.
GROSS WEIGHT		6200 lbs.
WING LOADING		19.5 lbs./sq. ft.
POWER LOADING		12.4 lbs./H.P. at 500 H.P.
MAXIMUM SPEED	at S.L.	196 m.p.h.
	at 5500 ft.	211 m.p.h.
CRUISING SPEED	at S.L.	176 m.p.h. at 75% POWER
	at 5500 ft.	190 m.p.h. " " "
	at 10,000 ft.	200 m.p.h. " " "
CRUISING RANGE		675-835 miles (varying with power used)
ABSOLUTE CEILING		24,000 feet
MAXIMUM INITIAL CLIMB		1,350 ft./min. (empty)
		300 ft./min. (on one engine)

SINGLE ENGINE PERFORMANCE

TOP SPEED	147 m.p.h.
CRUISE	129 m.p.h.
RANGE	976-1040 miles
ABSOLUTE CEILING	12,600 ft.

POWER - TWO MENASCO C6S-4 SIX CYLINDER INLINE AIRCOOLED SUPERCHARGED *"SUPER BUCCANEER"* ENGINES, RATED 250 H.P. EACH - MAXIMUM 290 H.P. FOR TAKE OFF

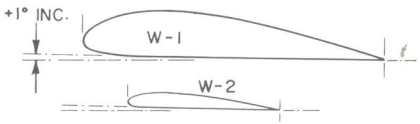

EXACT AIRFOIL UNKNOWN
(PORTRAYED MODIFIED CLARK Y)

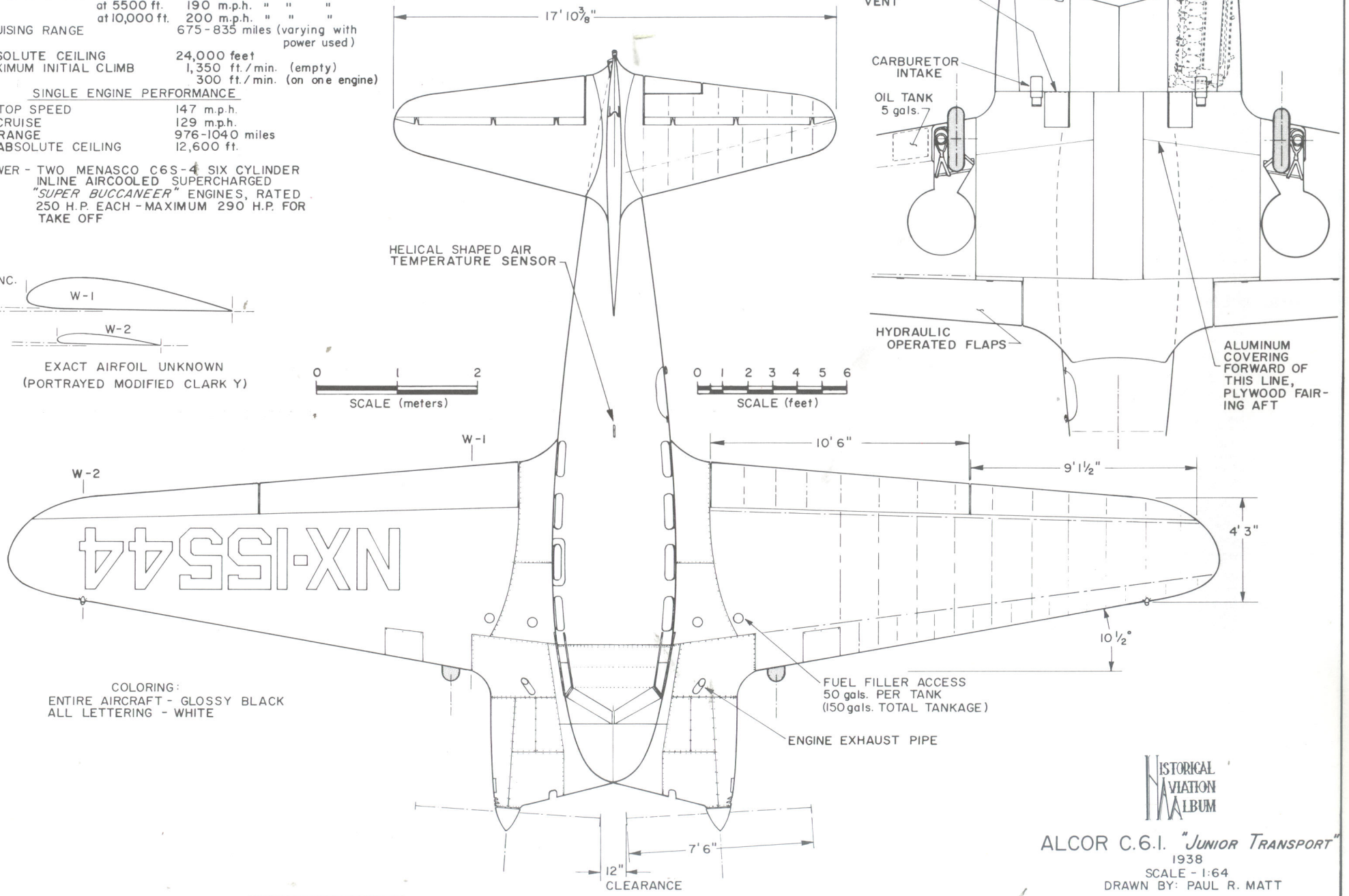

COLORING:
ENTIRE AIRCRAFT - GLOSSY BLACK
ALL LETTERING - WHITE

HISTORICAL AVIATION ALBUM

ALCOR C.6.I. *"JUNIOR TRANSPORT"*

1938
SCALE - 1:64
DRAWN BY: PAUL R. MATT

DRAWING No. 4-33-D

PLATE 1 of 2

© HISTORICAL AVIATION ALBUM 1967

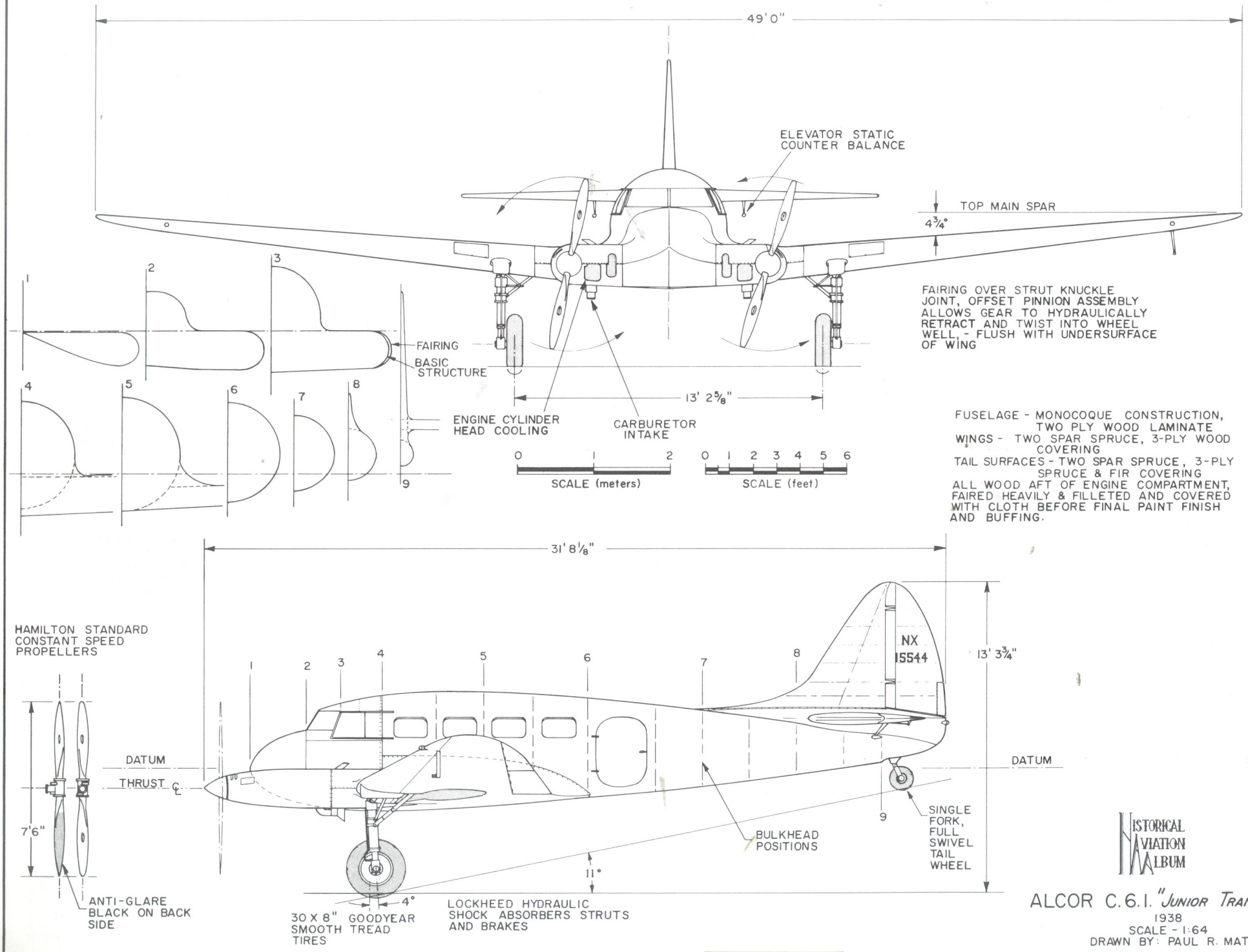
49' 0"
ELEVATOR STATIC COUNTER BALANCE
TOP MAIN SPAR
4¾°
FAIRING OVER STRUT KNUCKLE JOINT, OFFSET PINNION ASSEMBLY ALLOWS GEAR TO HYDRAULICALLY RETRACT AND TWIST INTO WHEEL WELL, - FLUSH WITH UNDERSURFACE OF WING
1
2
3
4
5
6
7
8
9
FAIRING
BASIC STRUCTURE
13' 2⅝"
ENGINE CYLINDER HEAD COOLING
CARBURETOR INTAKE
0 1 2
SCALE (meters)
0 1 2 3 4 5 6
SCALE (feet)
FUSELAGE - MONOCOQUE CONSTRUCTION, TWO PLY WOOD LAMINATE
WINGS - TWO SPAR SPRUCE, 3-PLY WOOD COVERING
TAIL SURFACES - TWO SPAR SPRUCE, 3-PLY SPRUCE & FIR COVERING
ALL WOOD AFT OF ENGINE COMPARTMENT, FAIRED HEAVILY & FILLETED AND COVERED WITH CLOTH BEFORE FINAL PAINT FINISH AND BUFFING.
31' 8⅛"
HAMILTON STANDARD CONSTANT SPEED PROPELLERS
NX 15544
13' 3¾"
DATUM
THRUST ℄
DATUM
7'6"
BULKHEAD POSITIONS
SINGLE FORK, FULL SWIVEL TAIL WHEEL
11°
4°
ANTI-GLARE BLACK ON BACK SIDE
30 X 8" GOODYEAR SMOOTH TREAD TIRES
LOCKHEED HYDRAULIC SHOCK ABSORBERS STRUTS AND BRAKES
HISTORICAL AVIATION ALBUM
ALCOR C.6.I. "JUNIOR TRANSPORT"
1938
SCALE - 1:64
DRAWN BY: PAUL R. MATT
DRAWING No. 4-33-D
PLATE 2 of 2
© HISTORICAL AVIATION ALBUM 1967

GENERAL SPECIFICATIONS

WEIGHT EMPTY	850 lbs.
USEFUL LOAD	550 lbs.
GROSS WEIGHT	1,400 lbs.
WING AREA (INCL. FUSE. PORTION)	120 sq. ft.
WING LOADING	11.5 lbs./sq. ft.
POWER LOADING	15.5 lbs./H.P.
TOP SPEED	120 mph
CRUISING SPEED	110 mph
LANDING SPEED	49 mph
ENDURANCE AT CRUISE	4 hrs.
RATE OF CLIMB, INITIAL, S.L.	700 ft./min.
SERVICE CEILING	16,500 feet

POWER: CONTINENTAL C-90-12FP (PUSHER MODIFICATION), RATED 90 H.P.

AIRFOIL NACA 4418

COLORING NOTES
(AIRCRAFT PORTRAYED)

ENTIRE AIRCRAFT NATURAL ALUMINUM
RED NOSE TRIM & PARALLEL STRIPES ON VERTICAL TAIL SURFACES
LICENSE NUMBERS - BLACK

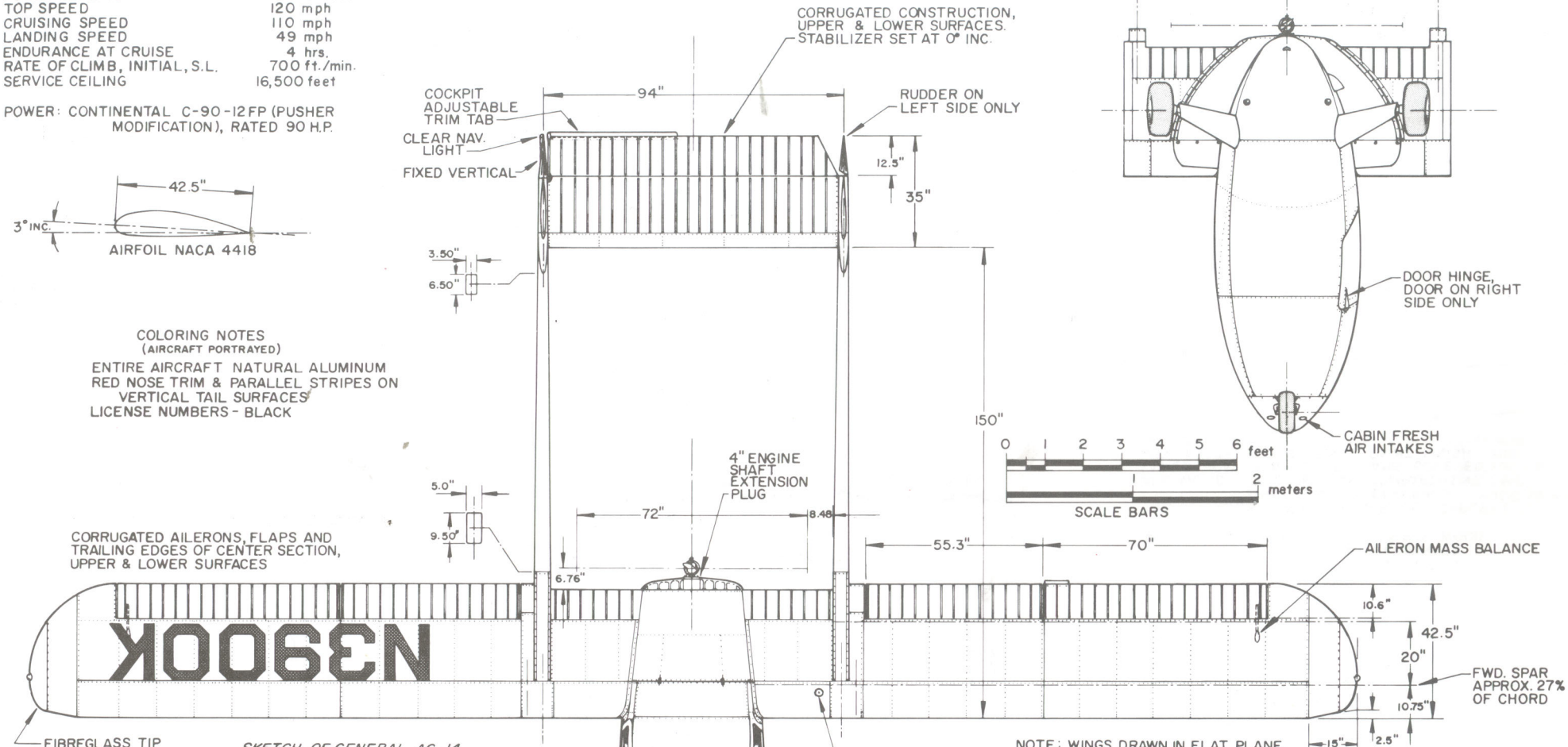

SKETCH OF GENERAL AG-14 COCKPIT LAYOUT, RIGHT HAND CONTROLS NOT INSTALLED

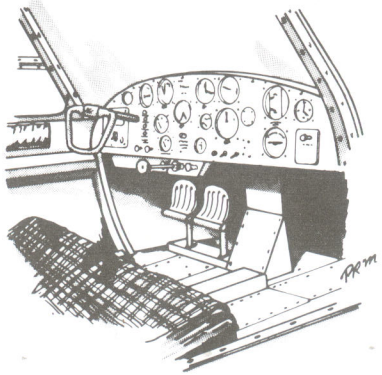

PLAID SEAT COVERS, RED & TAN OR BLUE & GRAY

FOR ADDITIONAL DETAIL CONSTRUCTION SKETCHES SEE HISTORICAL AVIATION ALBUM, VOLUME XII (12), 1973

OUR SINCERE APPRECIATION IS EXPRESSED TO MR. BEN M. ANDERSON FOR HIS PERSONAL INTEREST AND HELP IN THE PREPARATION OF THESE DRAWINGS.

HISTORICAL AVIATION ALBUM

ANDERSON GREENWOOD MODEL 14
1950

SCALE - ORIGINAL 1:24
REPRO. 1:48
DRAWN BY - PAUL R. MATT

© HISTORICAL AVIATION ALBUM 1973
P. O. BOX 33
TEMPLE CITY, CALIF. 91780

DRAWING No. 12-94-A

PLATE 1 of 2

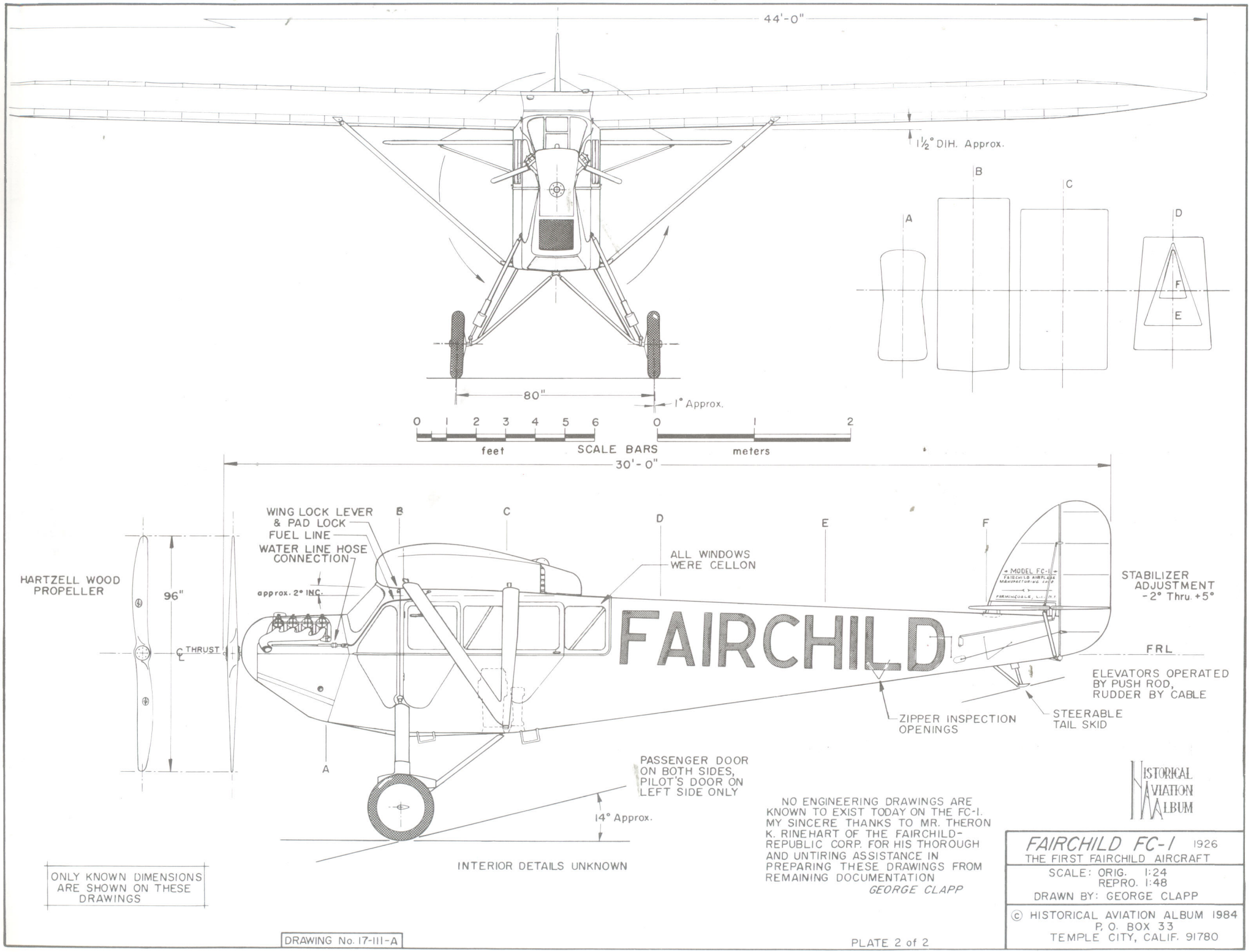
44'-0"
1½° DIH. Approx.
80"
1° Approx.
0 1 2 3 4 5 6
0 1 2
feet
SCALE BARS
meters
30'-0"
A
B
C
D
E
F
WING LOCK LEVER & PAD LOCK
FUEL LINE
WATER LINE HOSE CONNECTION
approx. 2° INC.
HARTZELL WOOD PROPELLER
96"
℄ THRUST
ALL WINDOWS WERE CELLON
FAIRCHILD
STABILIZER ADJUSTMENT -2° Thru. +5°
FRL
ELEVATORS OPERATED BY PUSH ROD, RUDDER BY CABLE
ZIPPER INSPECTION OPENINGS
STEERABLE TAIL SKID
PASSENGER DOOR ON BOTH SIDES, PILOT'S DOOR ON LEFT SIDE ONLY
14° Approx.
INTERIOR DETAILS UNKNOWN
ONLY KNOWN DIMENSIONS ARE SHOWN ON THESE DRAWINGS
NO ENGINEERING DRAWINGS ARE KNOWN TO EXIST TODAY ON THE FC-1. MY SINCERE THANKS TO MR. THERON K. RINEHART OF THE FAIRCHILD-REPUBLIC CORP. FOR HIS THOROUGH AND UNTIRING ASSISTANCE IN PREPARING THESE DRAWINGS FROM REMAINING DOCUMENTATION
GEORGE CLAPP
HISTORICAL AVIATION ALBUM
FAIRCHILD FC-1 1926
THE FIRST FAIRCHILD AIRCRAFT
SCALE: ORIG. 1:24
REPRO. 1:48
DRAWN BY: GEORGE CLAPP
© HISTORICAL AVIATION ALBUM 1984
P. O. BOX 33
TEMPLE CITY, CALIF. 91780
DRAWING No. 17-III-A
PLATE 2 of 2

GENERAL SPECIFICATIONS

WEIGHT, EMPTY	1790 lbs.
WEIGHT, GROSS	3225 lbs.
FUEL CAPACITY	104 gals.
WING AREA	290 sq. ft.
HIGH SPEED	122 mph
CRUISING SPEED	103 mph
LANDING SPEED	53 mph
RATE OF CLIMB	580 f.p.m.
ABSOLUTE CEILING	14,750 feet

POWER: WRIGHT J-5, 220 H.P.

COLORING NOTES

FUSELAGE - BLACK
WING & TAIL GROUP - INTERNATIONAL ORANGE
MARKINGS - WING, FIN & RUDDER - BLACK

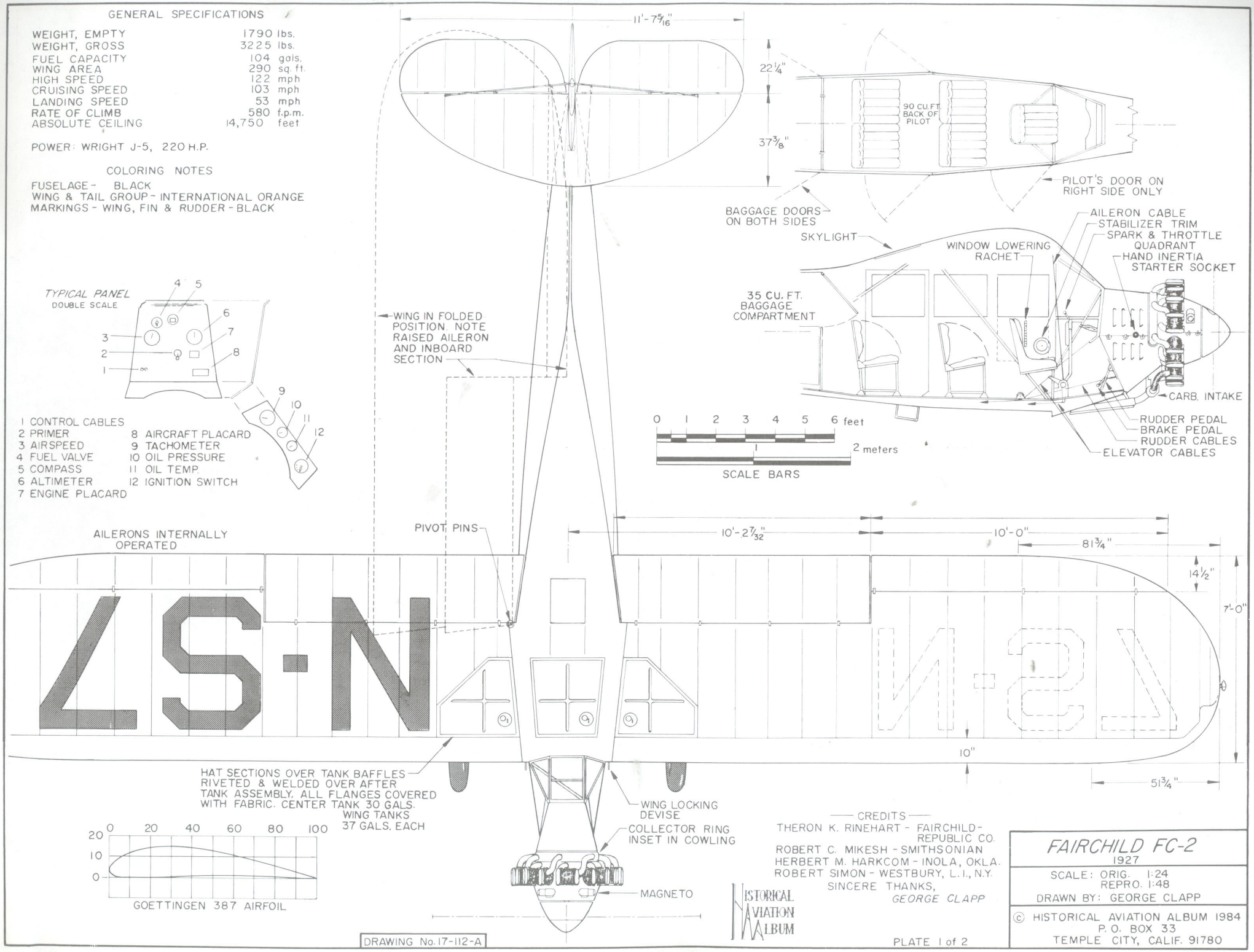

CREDITS
THERON K. RINEHART - FAIRCHILD-REPUBLIC CO.
ROBERT C. MIKESH - SMITHSONIAN
HERBERT M. HARKCOM - INOLA, OKLA.
ROBERT SIMON - WESTBURY, L.I., N.Y.
SINCERE THANKS,
GEORGE CLAPP

FAIRCHILD FC-2
1927

SCALE: ORIG. 1:24
REPRO. 1:48
DRAWN BY: GEORGE CLAPP

© HISTORICAL AVIATION ALBUM 1984
P. O. BOX 33
TEMPLE CITY, CALIF. 91780

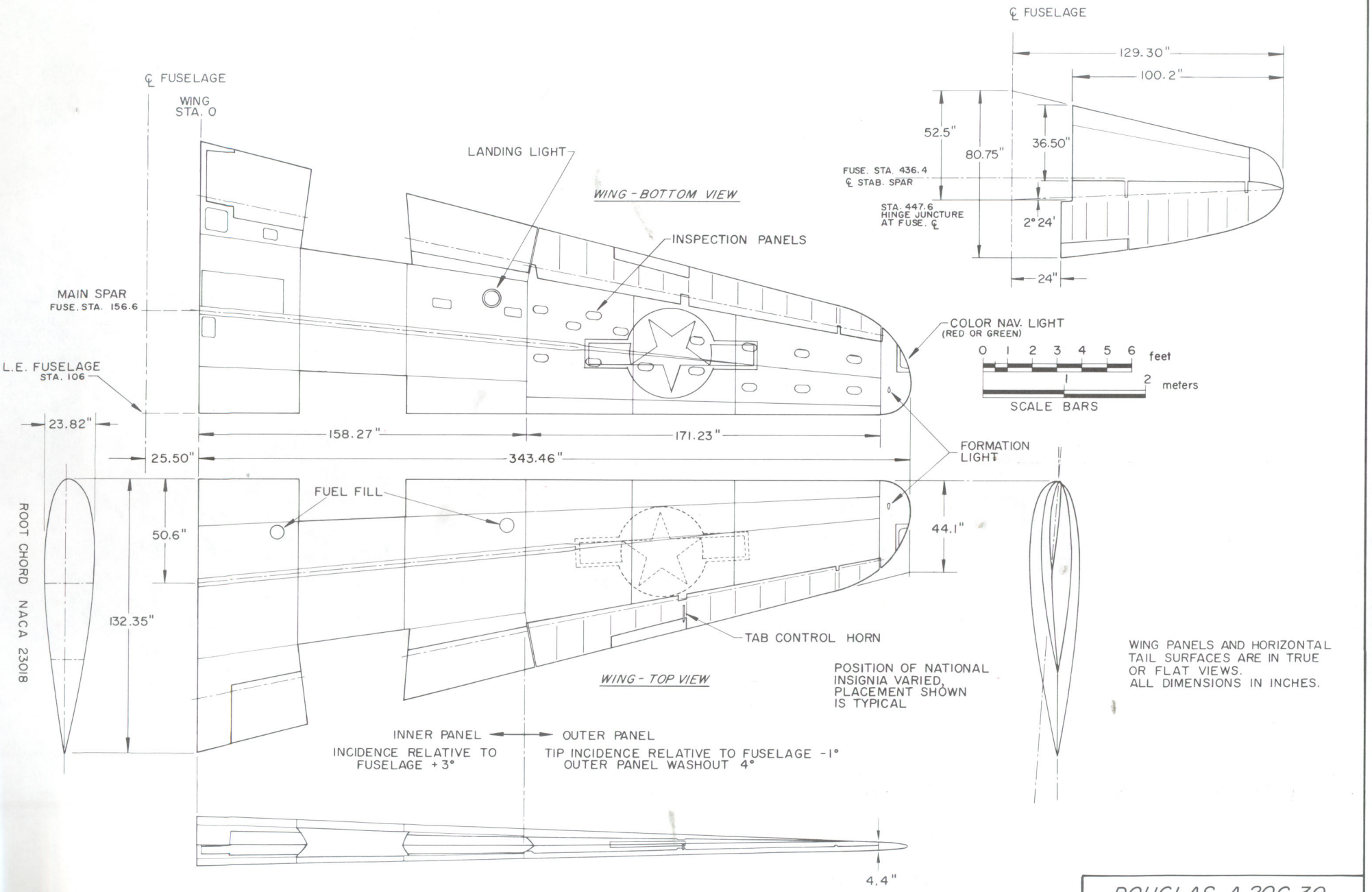

DOUGLAS A-20G-30

"HAVOC"

SCALE - ORIGINAL 1:32
REPRO. 1:64

DRAWN BY- JOHN ALCORN
INKED BY- PAUL R. MATT

© HISTORICAL AVIATION ALBUM 1977
P. O. BOX 33
TEMPLE CITY, CALIF., 91780

HISTORICAL AVIATION ALBUM

DRAWING No. 15-102-D

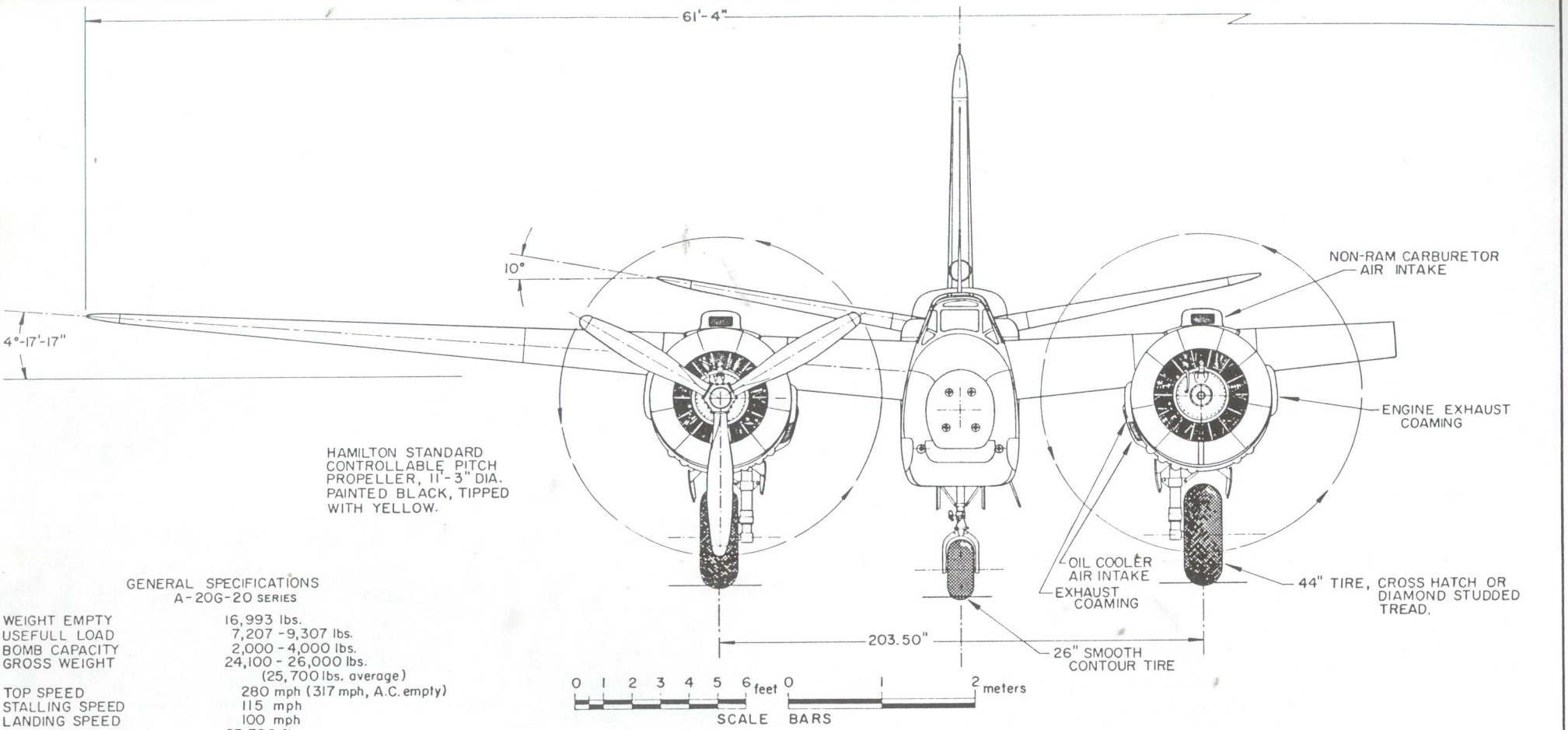

GENERAL SPECIFICATIONS
A-20G-20 SERIES

WEIGHT EMPTY	16,993 lbs.
USEFULL LOAD	7,207 - 9,307 lbs.
BOMB CAPACITY	2,000 - 4,000 lbs.
GROSS WEIGHT	24,100 - 26,000 lbs. (25,700 lbs. average)
TOP SPEED	280 mph (317 mph, A.C. empty)
STALLING SPEED	115 mph
LANDING SPEED	100 mph
SERVICE CEILING	23,700 ft.
FUEL CAPACITY	725 - 1105 gals.
OIL CAPACITY	40 gals.
WING AREA	464.8 sq. ft.
RANGE AT CRUISE	1,000 miles

POWER: TWO WRIGHT 14-CYLINDER R-2600-23 "CYCLONE" ENGINES
1,600 HP AT 2,400 rpm AT 1,000 feet (MAX.)
1,400 HP AT 2,400 rpm AT 10,000 ft. (MILITARY RATING)
1,275 HP AT 2,300 rpm AT 11,500 ft. (NORMAL RATING)

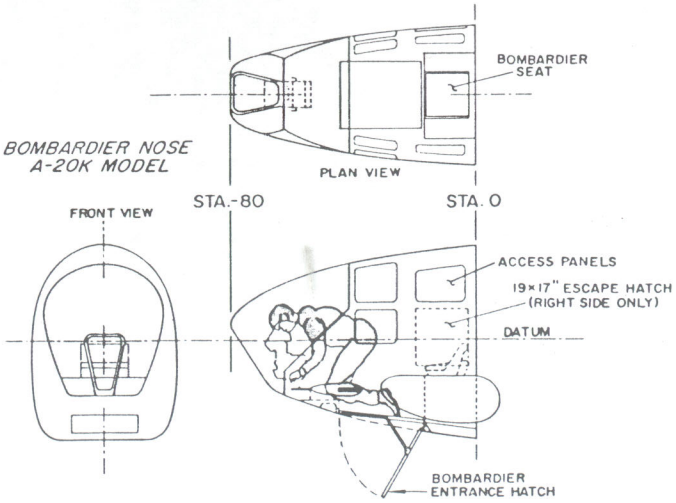

BOMBARDIER NOSE A-20K MODEL

NOTE:
ALL DIMENSIONS SHOWN IN THIS SERIES OF DRAWINGS ARE GIVEN OR DETERMINED FROM ESTABLISHED REFERENCES, OR MEASURED FROM ACTUAL AIRCRAFT. NO DIMENSIONS ARE ESTIMATED OR SCALED FROM PHOTOGRAPHS OR DRAWINGS.

MY SINCERE APPRECIATION IS EXTENDED TO MESSRS. HARRY S. GANN, DOUGLAS AIRCRAFT CORP.; PAUL PRICE, ANTELOPE VALLEY AIR MUSEUM; WINTHRUP SHAW, NATIONAL AIR & SPACE MUSEUM, SMITHSONIAN INSTITUTION; DUSTIN CARTER, AAHS; THE AIR FORCE MUSEUM AND AS ALWAYS GEORGE LEE, FOR THEIR HELP IN MAKING THESE DRAWINGS AS ACCURATE AND AUTHENTIC AS POSSIBLE.

John Alcorn

HISTORICAL AVIATION ALBUM

DOUGLAS A-20G-30
"HAVOC"

SCALE - ORIGINAL 1:32
REPRO. 1:64
DRAWN BY - JOHN ALCORN
INKED BY - PAUL R. MATT

© HISTORICAL AVIATION ALBUM 1977
P. O. BOX 33
TEMPLE CITY, CALIF., 91780

DRAWING No. 15-102-D

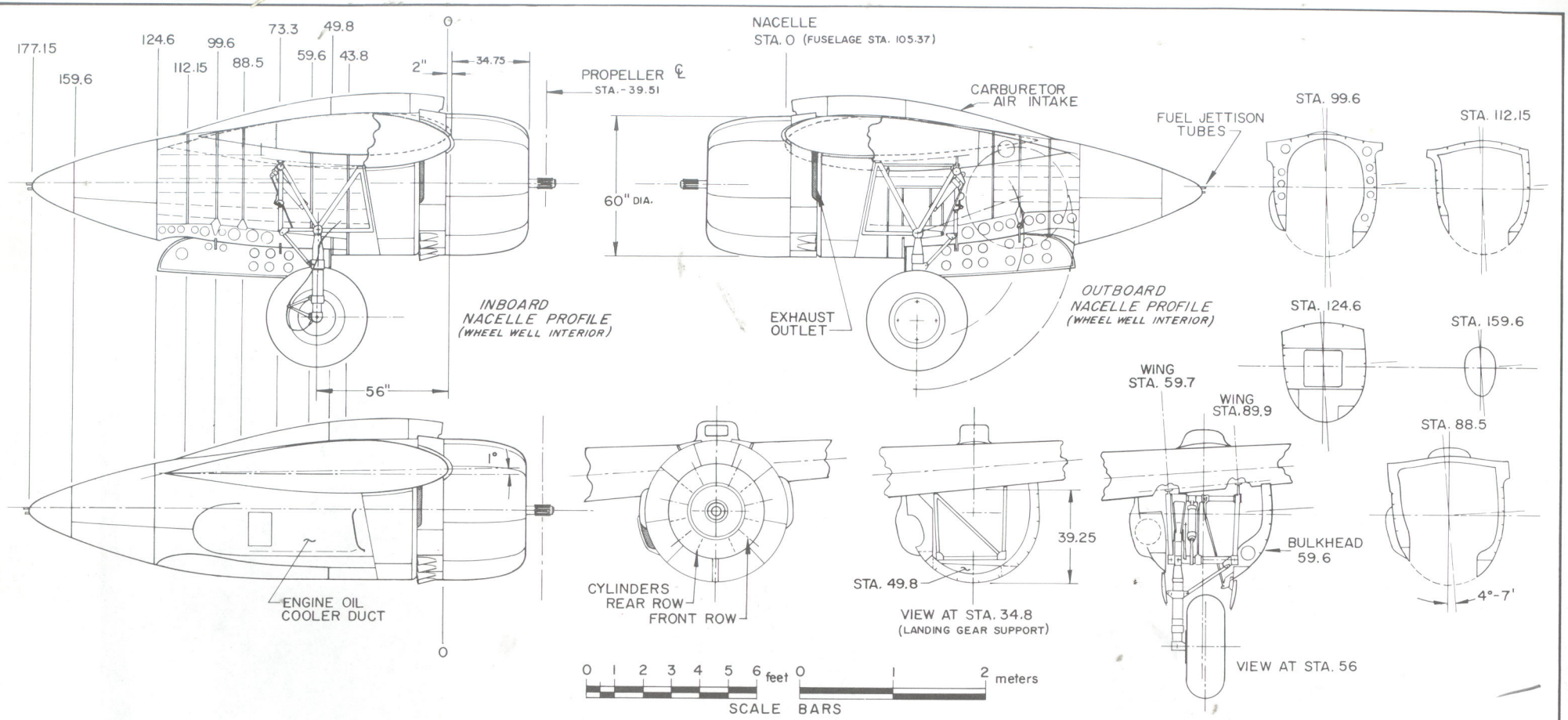

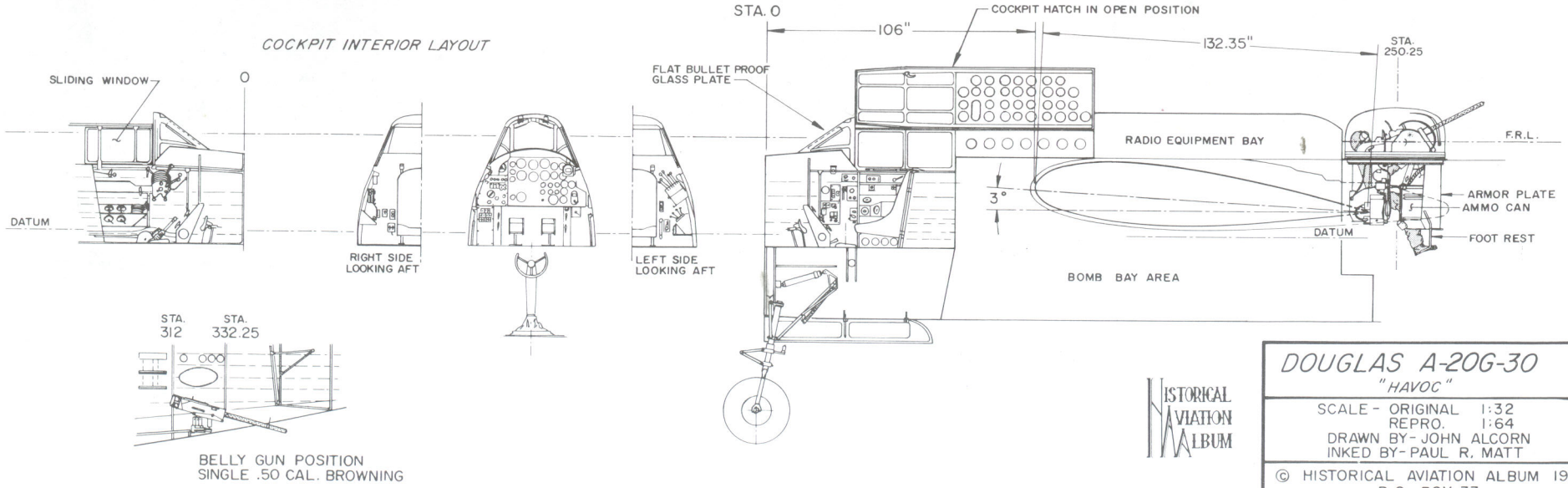

HISTORICAL AVIATION ALBUM

DOUGLAS A-20G-30

"HAVOC"

SCALE - ORIGINAL 1:32
REPRO. 1:64
DRAWN BY - JOHN ALCORN
INKED BY - PAUL R. MATT

© HISTORICAL AVIATION ALBUM 1977
P. O. BOX 33
TEMPLE CITY, CALIF., 91780

DRAWING No. 15-102-D

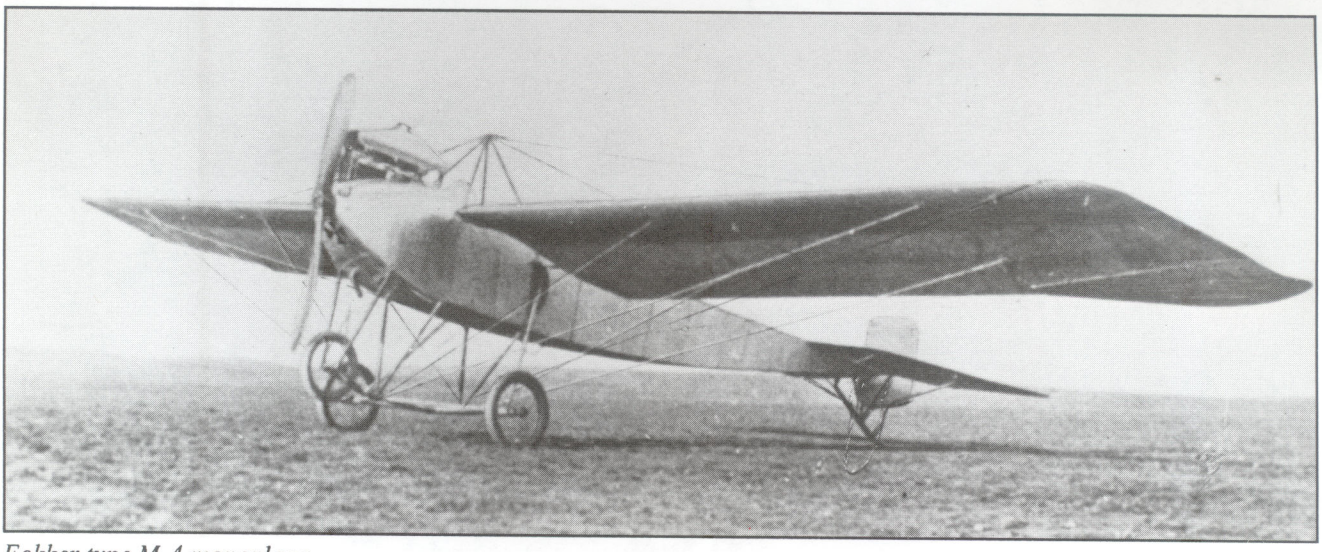

Fokker type M-4 monoplane.

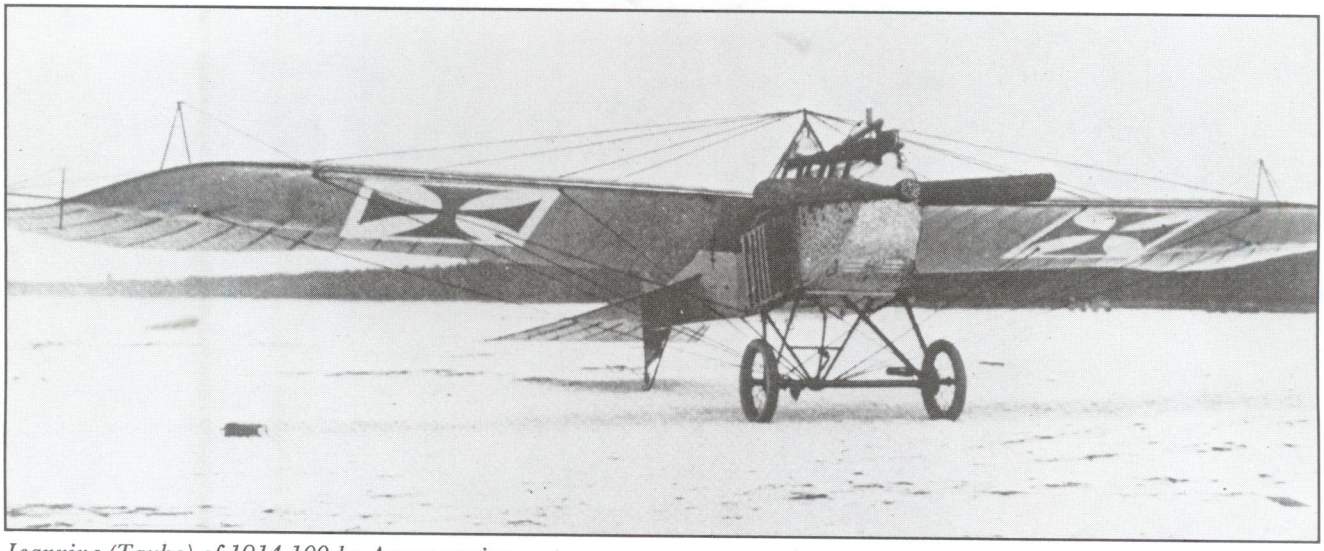

Jeannine (Taube) of 1914 100 hp Argus engine.

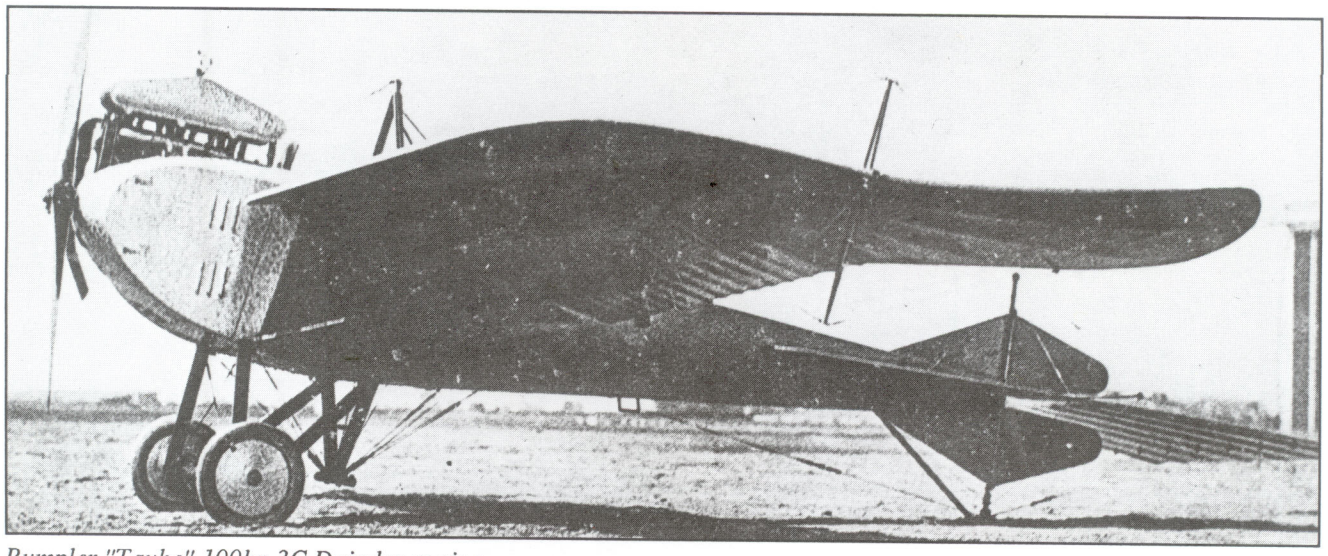

Rumpler "Taube" 100hp 3C Daimler engine.

GENERAL SPECIFICATIONS
(FIGURES ARE ESTIMATED)

WEIGHT EMPTY 950 lbs.
TOP SPEED 60 mph

POWER - 95 hp (PS), DAIMLER-MERCEDES, 6-cyl. WATER COOLED ENGINE

COLORING NOTES

TAUBES WERE GENERALLY COVERED WITH "BALLOON CLOTH", A LIGHT LINEN LIKE FABRIC, THAT WAS SEALED ON THE OUTSIDE WITH A RUBBERIZED SUBSTANCE. SINCE FEW WERE PAINTED, THE FINAL APPEARANCE WAS AN UNEVEN, STREAKED, MOTTLED GREYISH-BROWN COLOR THAT DIRTIED EASILY.

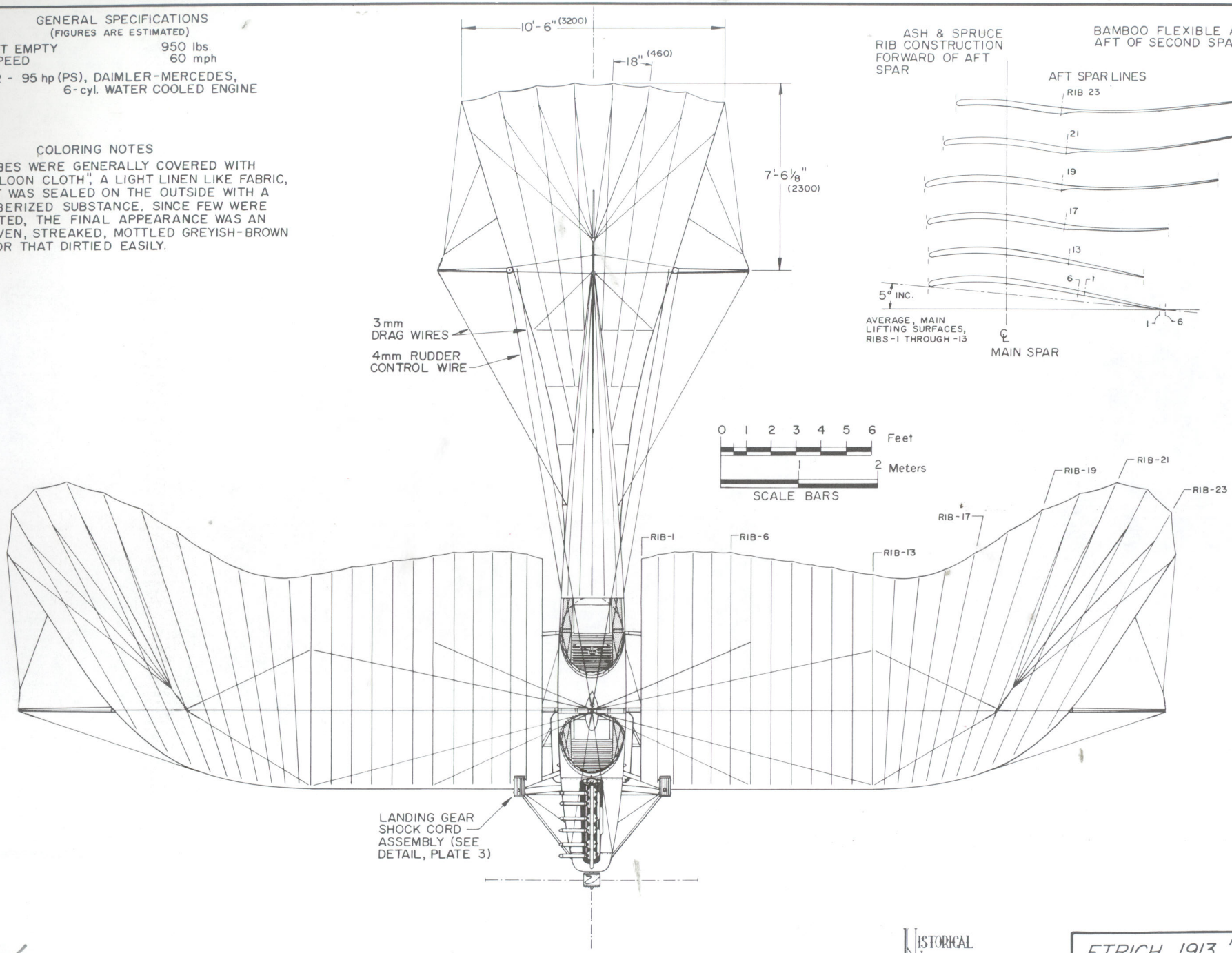

HISTORICAL AVIATION ALBUM

ETRICH 1913 "TAUBE"

SCALE - ORIGINAL 1:32
REPRO. 1:64

DRAWN BY - PAUL R. MATT

© HISTORICAL AVIATION ALBUM 1978
P. O. BOX 33
TEMPLE CITY, CALIF. 91780

DRAWING No. TB-105-D

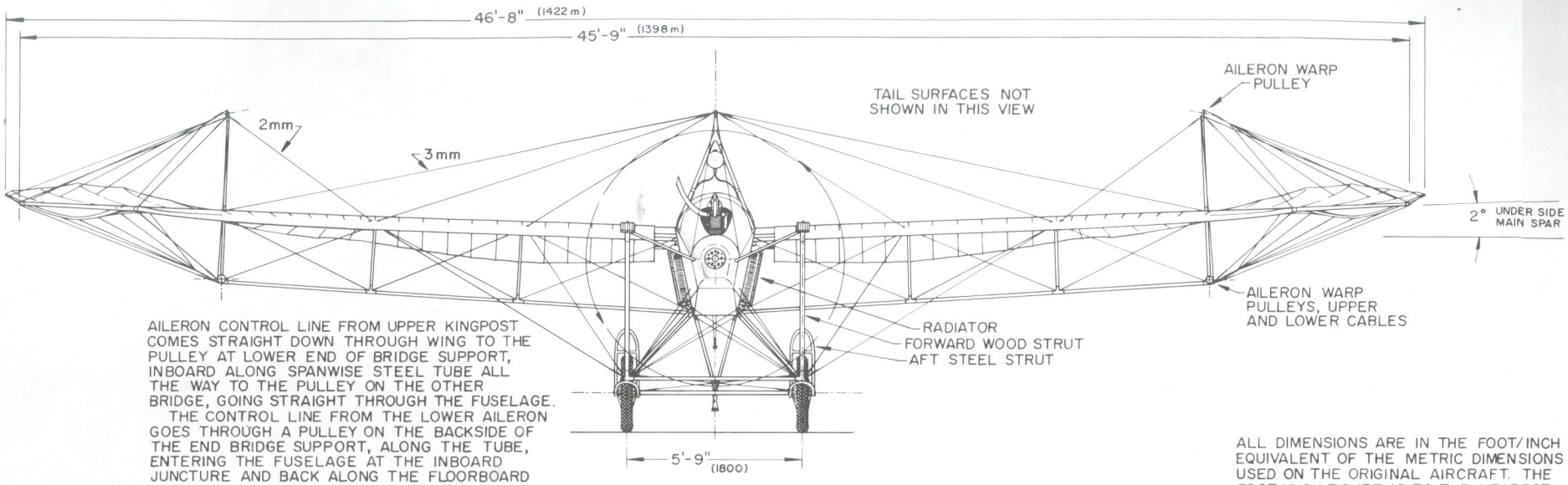

AILERON CONTROL LINE FROM UPPER KINGPOST COMES STRAIGHT DOWN THROUGH WING TO THE PULLEY AT LOWER END OF BRIDGE SUPPORT, INBOARD ALONG SPANWISE STEEL TUBE ALL THE WAY TO THE PULLEY ON THE OTHER BRIDGE, GOING STRAIGHT THROUGH THE FUSELAGE.

THE CONTROL LINE FROM THE LOWER AILERON GOES THROUGH A PULLEY ON THE BACKSIDE OF THE END BRIDGE SUPPORT, ALONG THE TUBE, ENTERING THE FUSELAGE AT THE INBOARD JUNCTURE AND BACK ALONG THE FLOORBOARD TO THE CONTROL WHEEL IN THE COCKPIT.

ALL DIMENSIONS ARE IN THE FOOT/INCH EQUIVALENT OF THE METRIC DIMENSIONS USED ON THE ORIGINAL AIRCRAFT. THE FOOT/INCH FIGURE IS TO THE NEAREST ONE-QUARTER INCH CONVERSION. ALL METRIC FIGURES ARE CENTEMETERS IN BRACKETS UNLESS OTHERWISE NOTED.

THESE DRAWINGS ARE BASED ON ORIGINAL PRINTS MADE BY MR. H. ROZENDAAL IN 1913 OF AN ETRICH TAUBE FLOWN THROUGHOUT GERMANY DURING THAT YEAR. THE DRAWINGS, ALTHOUGH EXTREMELY ACCURATE AND DIMENSIONED IN DETAIL, WERE TECHNICALLY NOT COMPLETE. THEY ARE THE MOST AUTHENTIC AND DETAILED DRAWINGS OF ANY TAUBE AIRCRAFT TO SURVIVE THE RAVAGES OF MAN AND TIME FOR OVER SIXTY YEARS. IT IS BELIEVED THEY FORM THE ONLY RELIABLE MATERIAL TO USE AT THIS TIME.

SINCE THERE WERE SO MANY VARIANTS OF THE TAUBE, EVEN THE ETRICH DESIGN, THESE DRAWINGS CAN BE CONSIDERED ACCURATE BUT ONLY REPRESENTATIVE OF THE TYPE.

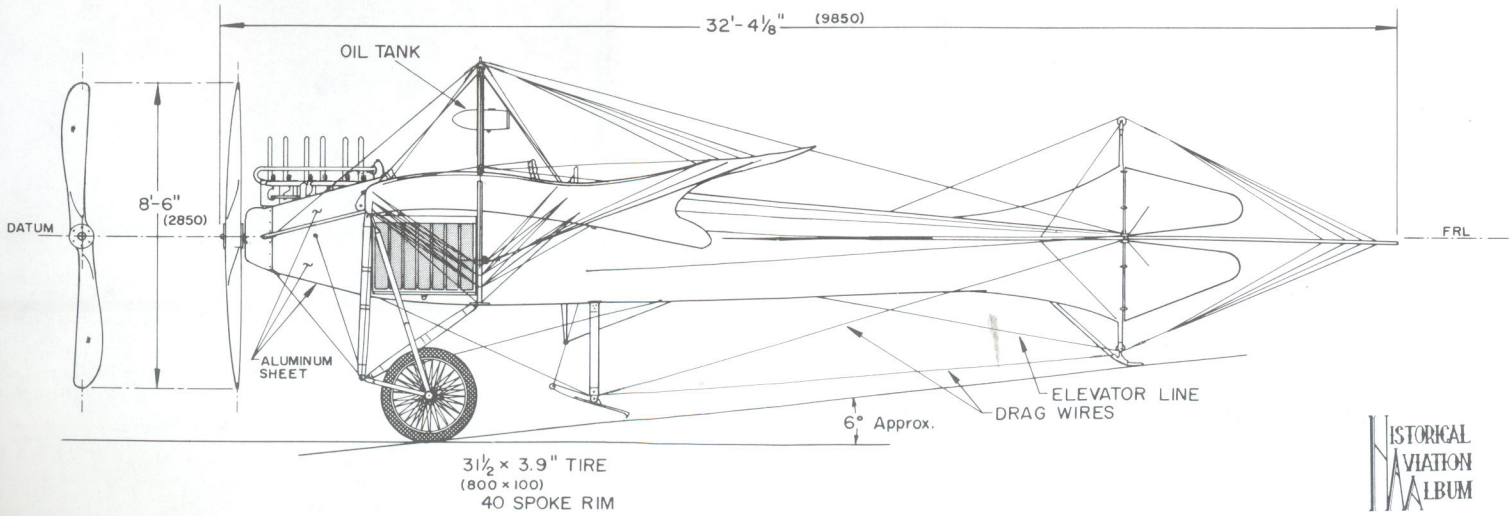

TO MR. JOHN UNDERWOOD AND COL. JOHN A. deVRIES, MY SINCERE APPRECIATION FOR PHOTOGRAPHS SUPPORTING THE DETAILING OF THESE DRAWINGS.

HISTORICAL AVIATION ALBUM

ETRICH 1913 "TAUBE"

SCALE - ORIGINAL 1:32
REPRO. 1:64

DRAWN BY - PAUL R. MATT

© HISTORICAL AVIATION ALBUM 1978
P. O. BOX 33
TEMPLE CITY, CALIF. 91780

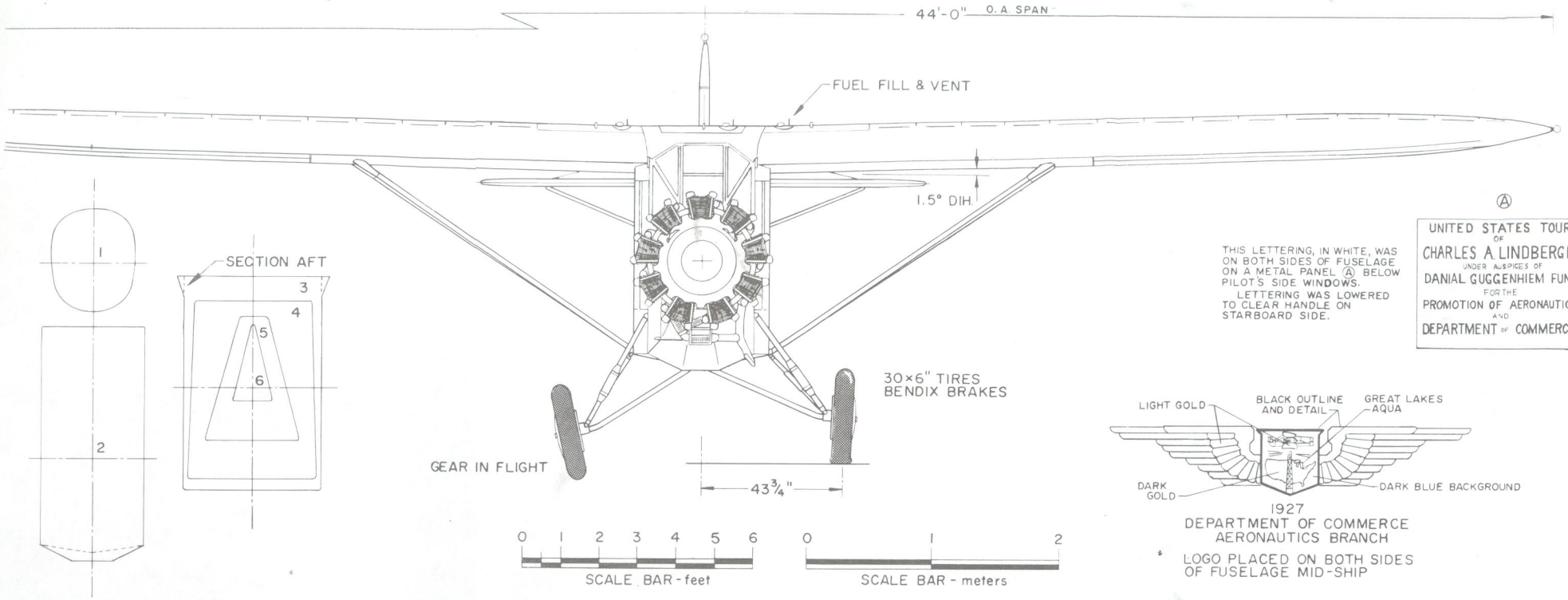

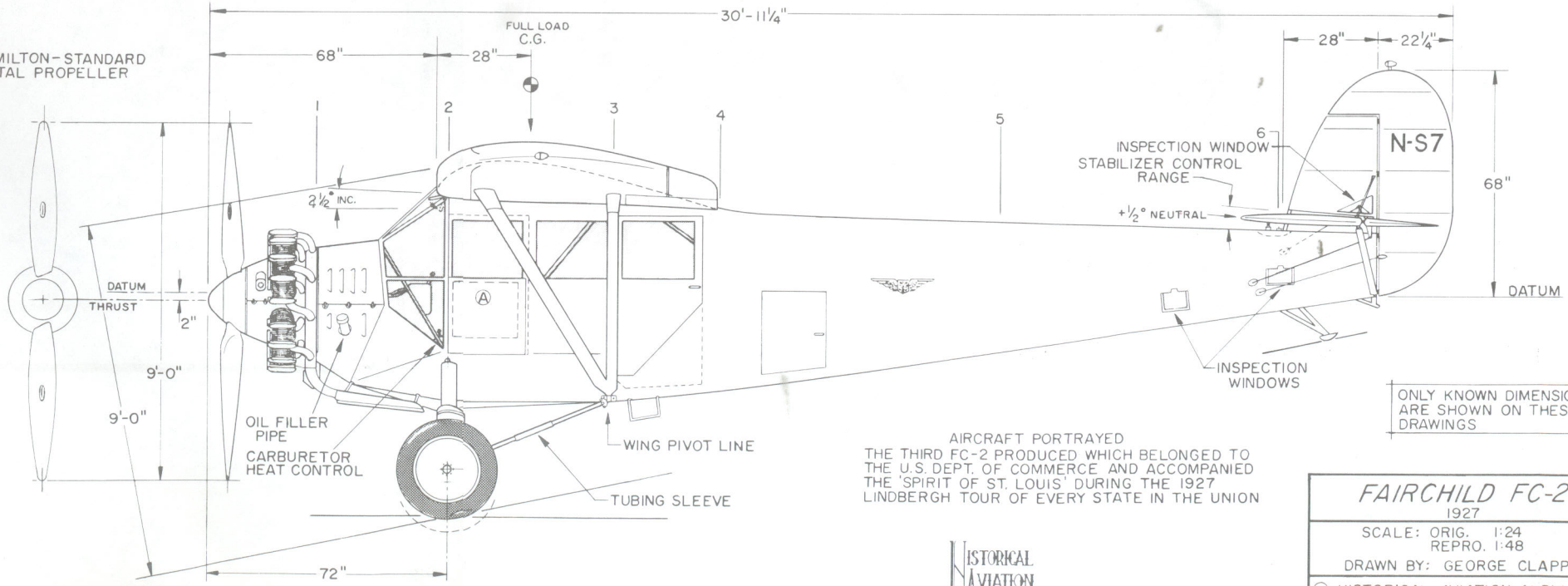

ONLY KNOWN DIMENSIONS ARE SHOWN ON THESE DRAWINGS

AIRCRAFT PORTRAYED
THE THIRD FC-2 PRODUCED WHICH BELONGED TO THE U.S. DEPT. OF COMMERCE AND ACCOMPANIED THE 'SPIRIT OF ST. LOUIS' DURING THE 1927 LINDBERGH TOUR OF EVERY STATE IN THE UNION

HISTORICAL AVIATION ALBUM

DRAWING No. 17-112-A

PLATE 2 of 2

FAIRCHILD FC-2
1927

SCALE: ORIG. 1:24
REPRO. 1:48

DRAWN BY: GEORGE CLAPP

© HISTORICAL AVIATION ALBUM 1984
P. O. BOX 33
TEMPLE CITY, CALIF. 91780

SKIS-LAMINATED WOOD (TYPE, FAIRCHILD 71 BYRD)
9'-1"
22"
5'-0"
SHOCKS IN HOUSING
STARS and STRIPES
SKI STRUT SYSTEM
HAMILTON-STANDARD GROUND ADJUSTABLE PROPELLER 9'-6" DIA.
CABIN EXHAUST HEAT EXCHANGE
HAT SECTIONS RIVETED, WELDED OVER AFTER TANK ASSEMBLY
LICENSE IN SAME POSITION ON TOPSIDE RIGHT WING
AIRSPEED PITOT
51¾"
10"
31"
28¾" R.
47½" R
7'-0"
81¾"
16"
13'-11¼"
9'-2⅝"
NX8000
60 GAL
40 GAL
40 GAL
60 GAL
REEL ANTENNA (IN FLIGHT)
SLIDING HATCH IN PLACE OF SKYLIGHT
PIVOT POINT
AUXILIARY STRUT TO SUPPORT FUEL LOAD WHEN FOLDED
SCALE BARS
feet 0 1 2 3 4 5 6
meters 1 2
EARTH INDUCTOR COMPASS
WING IN FOLDED POSITION NOTE RAISED AILERON AND INBOARD PANEL
FIXED ANTENNA
37⅞"
22¼"
℄ HINGE
14'-0"
1 COWL LOUVRE CONTROL
2 FUEL TANK
3 GUN RACK
4 SLIDING NAV. HATCH
5 RADIO SET
6 RADIO DROP ANTENNA & REEL
7 RADIO GASOLINE GENERATOR
8 TABLE
9 WINDOW, OBLIQUE PHOTOS
10 STOOL
11 VIEW FINDER
12 FAIRCHILD MAPPING CAMERA
13 72 GAL. REMOVABLE FUEL TANK
14 CONTROL CABLES
15 FIRE EXTINGUISHERS
16 MAP CASE
17 WIND DRIVEN GENERATOR
COLORING NOTES
MIDNIGHT BLUE - FUSELAGE, FIN, RUDDER, LICENSE ON WING
INTERNATIONAL ORANGE - WINGS, STABILIZER, ELEVATORS
INTRNL. ORANGE, BORDERED IN WHITE - LETTERING ON FUSELAGE & VERTICAL TAIL SURFACES
NAME - STARS - RED, AND - WHITE, STRIPES - BLUE BORDERED IN WHITE
DRAWING No. 17-113-A
PLATE 1 of 2
HISTORICAL AVIATION ALBUM
FAIRCHILD FC-2W2 1928
ADM. BYRD ANTARCTIC EXPEDITION 1929
SCALE: ORIG. 1:24 REPRO. 1:48
DRAWN BY: GEORGE CLAPP
© HISTORICAL AVIATION ALBUM 1984
P.O. BOX 33
TEMPLE CITY, CALIF. 91780

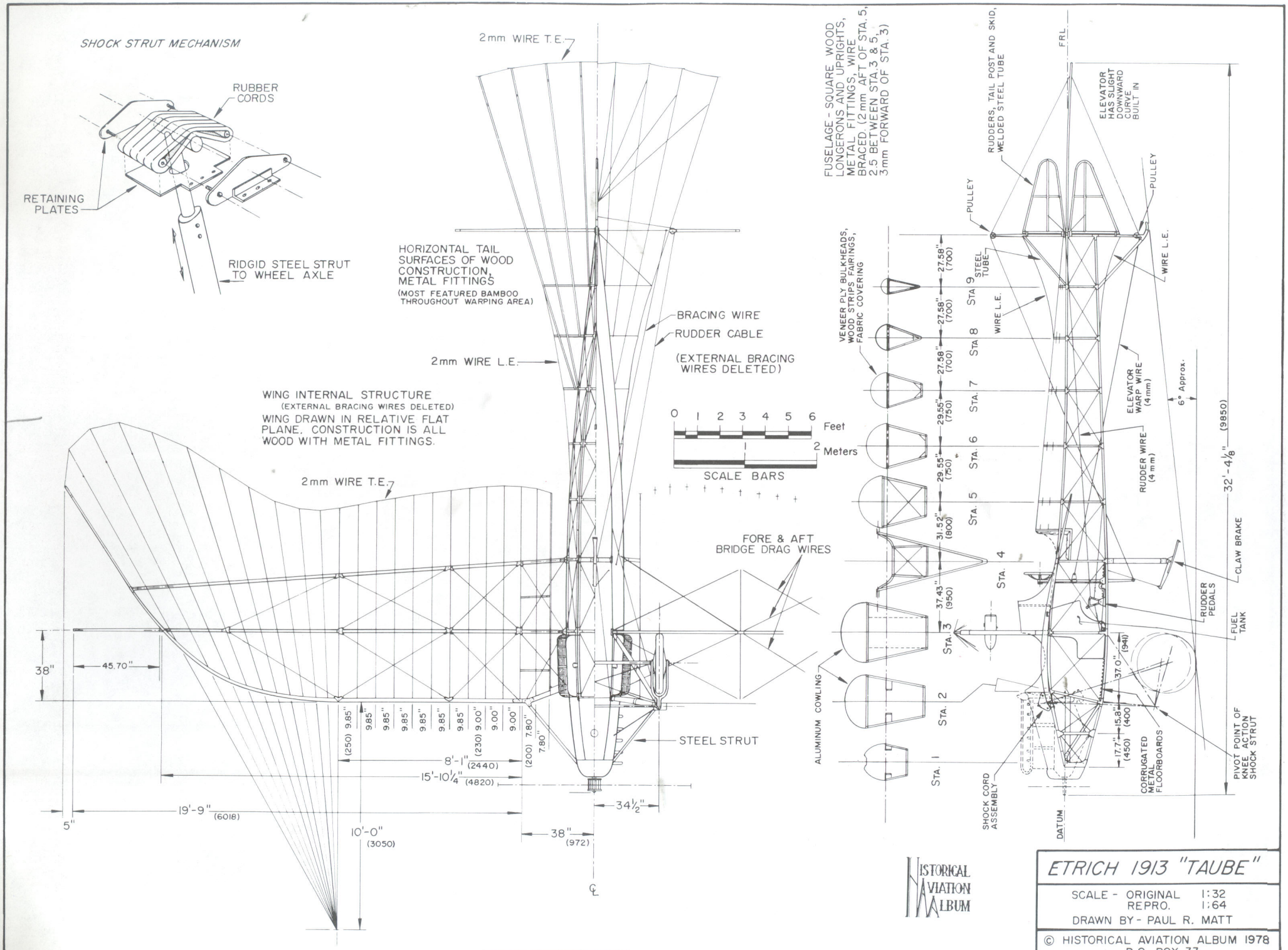

HISTORICAL AVIATION ALBUM

ETRICH 1913 "TAUBE"

SCALE - ORIGINAL 1:32
REPRO. 1:64

DRAWN BY - PAUL R. MATT

© HISTORICAL AVIATION ALBUM 1978
P.O. BOX 33
TEMPLE CITY, CALIF. 91780

DRAWING No. TB-105-D

GENERAL SPECIFICATIONS

WEIGHT, LIGHT		1596 lbs.
USEFUL LOAD		735 lbs.
PILOT	165 lbs.	
PAYLOAD, TWO PASS. OR CARGO	330 lbs.	
FUEL & OIL	240 lbs.	
GROSS WEIGHT		2331 lbs.
WING AREA		275 sq. ft.
FUEL CAPACITY		35 gal.
A 7-GAL. RESERVE TANK, ADDED LATER, GAVE A CRUISING RANGE OF 5 HRS.		
CARGO SPACE		30 cu. ft.
MAXIMUM SPEED, FLAPS UP 2°		97.1 m.p.h.
LANDING SPEED (NO FLAPS)		42.5 m.p.h.
(WITH FLAPS)		40.0 m.p.h.
TAKEOFF DISTANCE (NO FLAPS)		159.5 yds.
(WITH FLAPS)		138.4 yds.
CLIMB TO 4,000 FT., FLAPS AT 4°		13.7 min.
ABSOLUTE CEILING, FLAPS AT 8°		9890 ft.

POWER: CURTISS 90 h.p. OX-5

NOTE:

THE FC-1 WAS SPECIFICALLY DESIGNED FOR THE FAIRCHILD AERIAL CAMERA. WITHOUT CAMERA EQUIPMENT IT CARRIED THE PILOT AND TWO PASSENGERS. LATER WITH WRIGHT J-4 ENGINE IT CARRIED FOUR AND WAS REDESIGNATED AS THE FC-1A.

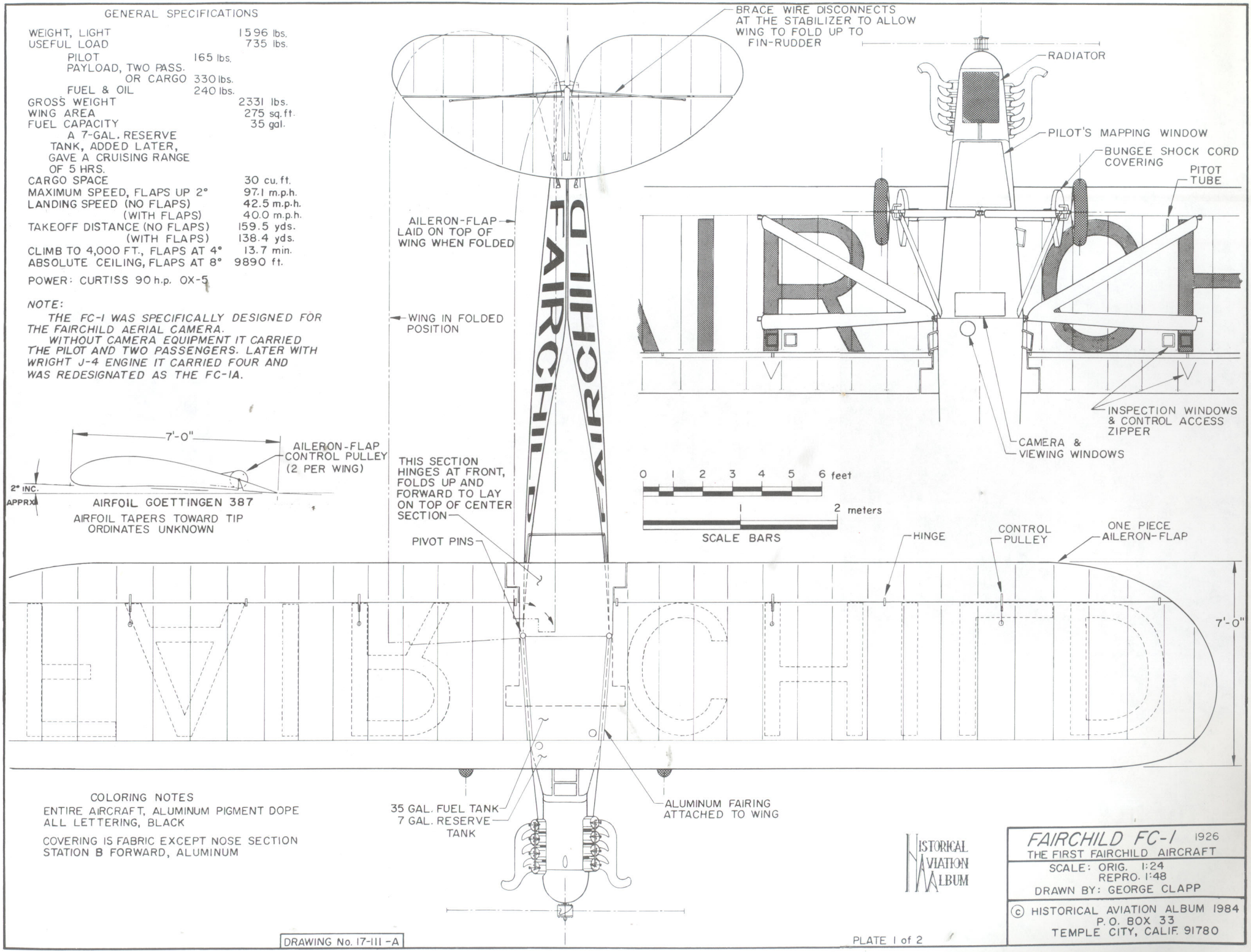

COLORING NOTES

ENTIRE AIRCRAFT, ALUMINUM PIGMENT DOPE
ALL LETTERING, BLACK

COVERING IS FABRIC EXCEPT NOSE SECTION STATION B FORWARD, ALUMINUM

HISTORICAL AVIATION ALBUM

FAIRCHILD FC-1 1926

THE FIRST FAIRCHILD AIRCRAFT

SCALE: ORIG. 1:24
REPRO. 1:48

DRAWN BY: GEORGE CLAPP

© HISTORICAL AVIATION ALBUM 1984
P.O. BOX 33
TEMPLE CITY, CALIF. 91780

DRAWING No. 17-111-A

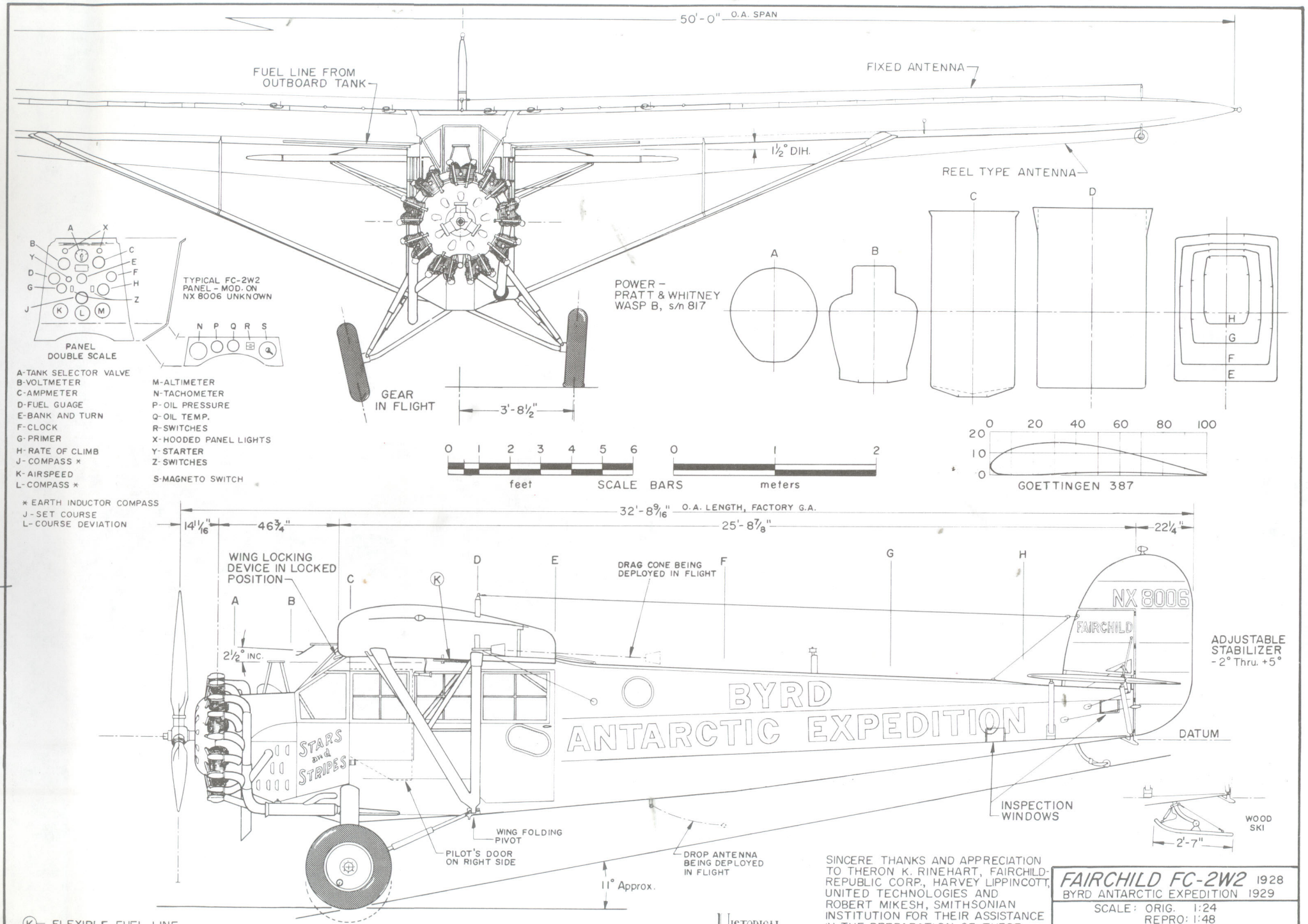

SINCERE THANKS AND APPRECIATION TO THERON K. RINEHART, FAIRCHILD-REPUBLIC CORP., HARVEY LIPPINCOTT, UNITED TECHNOLOGIES AND ROBERT MIKESH, SMITHSONIAN INSTITUTION FOR THEIR ASSISTANCE IN THE PREPARATION OF THESE DRAWINGS

GEORGE CLAPP

GENERAL SPECIFICATIONS

WEIGHT EMPTY	1820 lbs.
USEFUL LOAD	700 lbs.
GROSS WEIGHT	2520 lbs.
WING AREA (incl. ailerons)	184.14 sq. ft.
TOP SPEED	124 m.p.h.
CRUISING SPEED	106/116 m.p.h.
TAKEOFF SPEED	60 m.p.h.
LANDING SPEED	70 m.p.h.
CLIMB SPEED, IDEAL	80 m.p.h.
CLIMB, INITIAL, S.L.	700 ft./min.
SERVICE CEILING	12,000 feet
RANGE AT CRUISE	265/350 miles
FUEL CAPACITY, NORMAL	45 gals., 73 Octane
OIL CAPACITY	4.1 gals.

POWER - RANGER 6 Cyl. A.C. INLINE L-440-1, 175 h.p. at 2450 r.p.m.

CONSTRUCTION NOTES

FUSELAGE - FABRIC COVERED WELDED STEEL TUBE, ALUMINUM TURTLE DECKING & ENGINE AREA & FILLETING
WINGS, FIXED STABILIZER & FIN - WOOD CONSTRUCTION, PLYWOOD COVERED
METAL FRAME AILERONS, RUDDER & ELEVATORS - FABRIC COVERED

COLORING NOTES

ENTIRE AIRCRAFT - SILVER
LETTERING, TRIM, DETAILS - BLACK
NATIONAL INSIGNIA - DRK. BLUE DISC., WHITE STAR

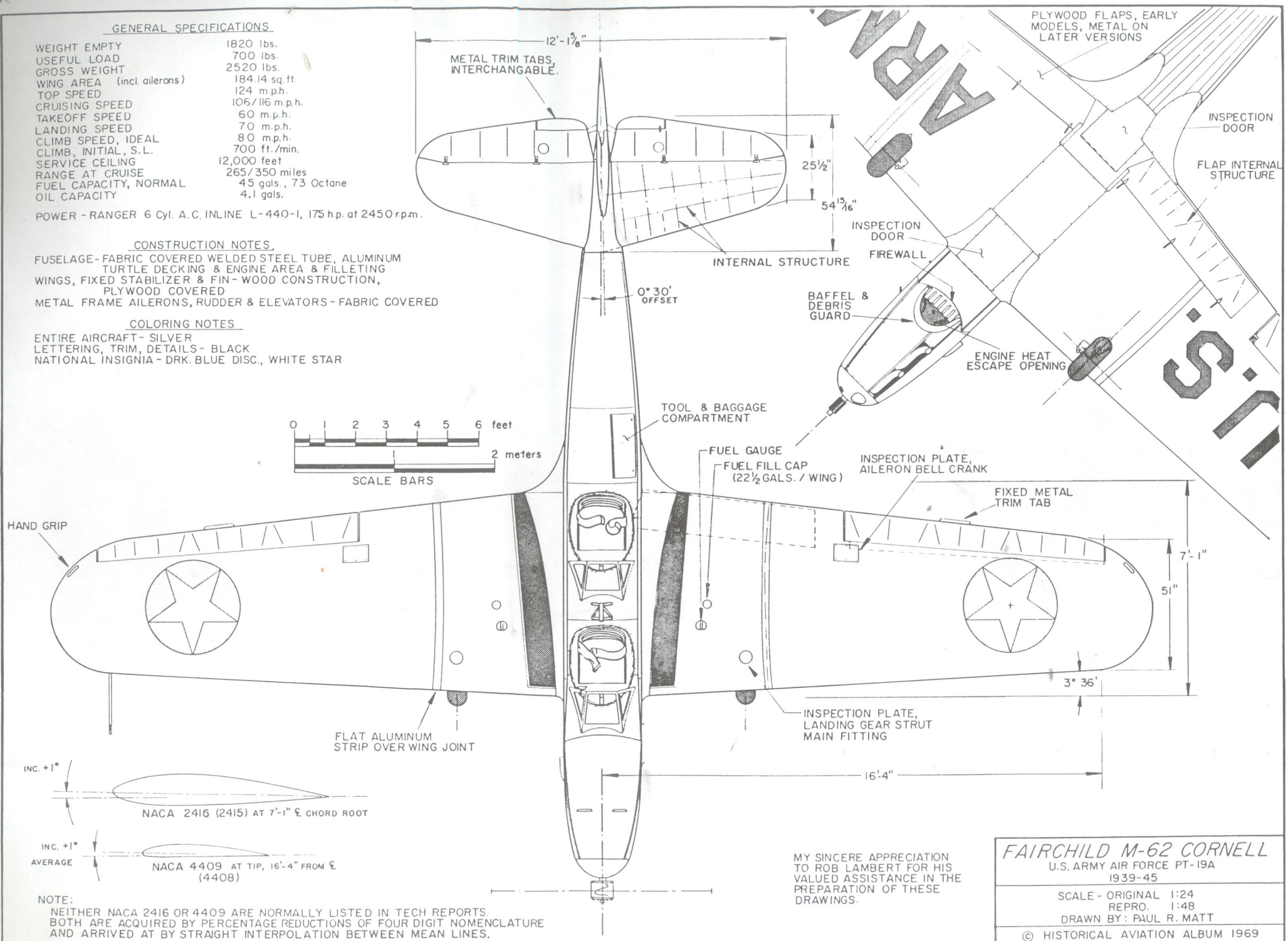

NOTE:
NEITHER NACA 2416 OR 4409 ARE NORMALLY LISTED IN TECH REPORTS. BOTH ARE ACQUIRED BY PERCENTAGE REDUCTIONS OF FOUR DIGIT NOMENCLATURE AND ARRIVED AT BY STRAIGHT INTERPOLATION BETWEEN MEAN LINES.
(SEE NACA REPORT No. 460, CIRCA 1933)

MY SINCERE APPRECIATION TO ROB LAMBERT FOR HIS VALUED ASSISTANCE IN THE PREPARATION OF THESE DRAWINGS.

FAIRCHILD M-62 CORNELL

U.S. ARMY AIR FORCE PT-19A
1939-45

SCALE - ORIGINAL 1:24
REPRO. 1:48
DRAWN BY: PAUL R. MATT

© HISTORICAL AVIATION ALBUM 1969
P.O. BOX 33
TEMPLE CITY, CALIF., 91780

DRAWING No AA-69-A

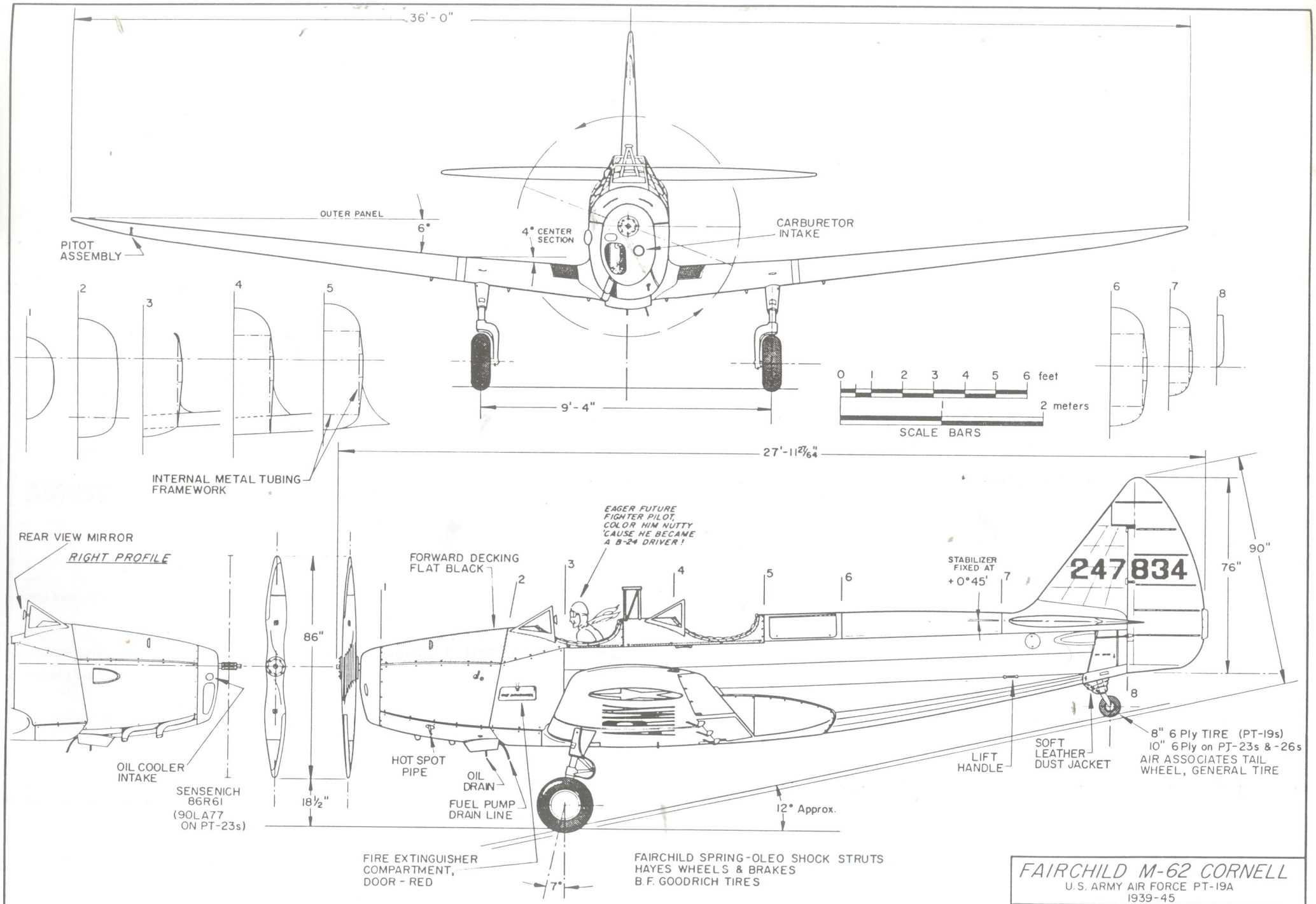

FAIRCHILD M-62 CORNELL

U.S. ARMY AIR FORCE PT-19A
1939-45

SCALE - ORIGINAL 1:24
REPRO. 1:48
DRAWN BY: PAUL R. MATT

© HISTORICAL AVIATION ALBUM 1969
P.O. BOX 33
TEMPLE CITY, CALIF., 91780

DRAWING No. AA-69-A

GENERAL SPECIFICATIONS

WEIGHT EMPTY	4,740 Kg.	10,461 lbs.
USEFUL LOAD	2,600 Kg.	5,732 lbs.
GROSS WEIGHT	7,340 Kg.	16,193 lbs.
WING AREA	66,2 m^2	217.2 sq. ft.
WING LOADING	111 kg./m^2	
POWER LOADING	3 kg./h.p.	6.6 lbs./h.p.
MAXIMUM SPEED	415 kmh	258 mph
CRUISING SPEED ⅔ power	348 kmh	216 mph
CRUISING SPEED 55% power	321 kmh	199 mph
CLIMB, INITIAL, S.L.	1,000 ft.	2.5 min.
TO 4,000 m., 12,000 ft.		10.4 min.
TO 6,000 m., 18,000 ft.		27 min.
ABSOLUTE CEILING	8,100 m.	26,575 ft.
SERVICE CEILING	7,700 m.	25,260 ft.
ONE ENGINE, ABSOLUTE	3,300 m.	10,827 ft.
RANGE, CRUISE, ALTITUDE	1,550 km.	963 miles

POWER - TWO BRISTOL PEGASUS XXVI, 950 hp each at 2600 rpm at 3050 meters (10,000 feet), 650 hp at 2250 rpm, 510 hp at 2100 rpm

BOMB CAPACITY, UP TO 1,000 kg. (1,850 lbs.)
ARMAMENT, 4 7.9 MACHINE GUNS & 1 20 mm. CANNON

COLORING NOTES

PROTOTYPE, ALL SILVER, PRE-WAR NATIONAL INSIGNIA OF RED, WHITE & BLUE, YELLOW ORANGE CENTER

SERVICE CAMOUFLAGE, IRREGULAR PATCHES OF DARK GREEN, BROWN & KAHKI, BLACK UNDERSURFACES. INSIGNIA REMAINED SAME BUT CENTER DOT PAINTED BLACK JUST PRIOR TO NAZI INVASION OF HOLLAND

WAR EMERGENCY, CAMOUFLAGE AS ABOVE, NATIONAL INSIGNIA CHANGED TO ORANGE TRIANGLE, OUTLINED IN BLACK, RUDDER STRIPES ABANDONED, RUDDERS SOLID ORANGE OUTLINED IN BLACK

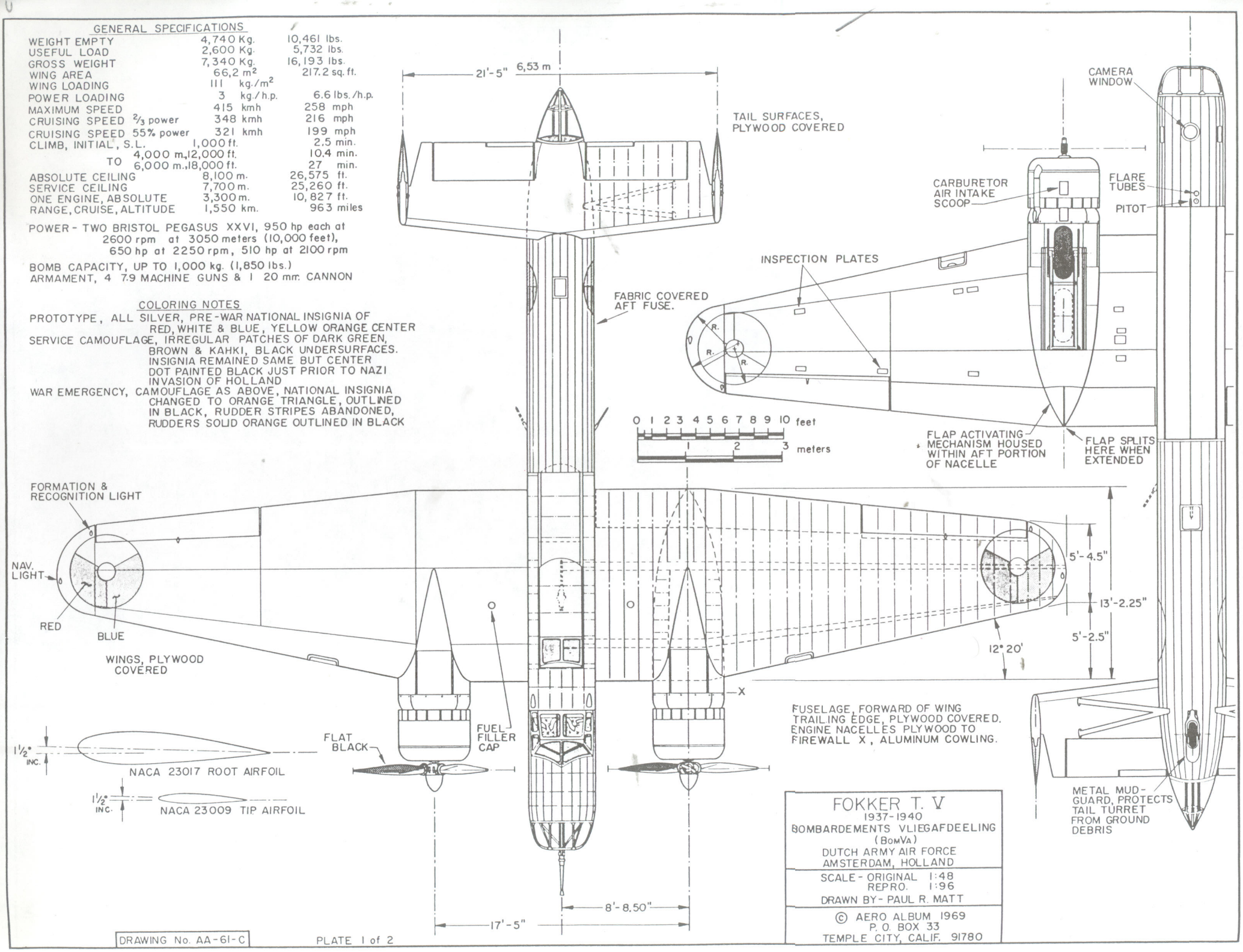

FOKKER T. V
1937-1940
BOMBARDEMENTS VLIEGAFDEELING
(BomVa)
DUTCH ARMY AIR FORCE
AMSTERDAM, HOLLAND

SCALE - ORIGINAL 1:48
REPRO. 1:96
DRAWN BY - PAUL R. MATT

© AERO ALBUM 1969
P. O. BOX 33
TEMPLE CITY, CALIF. 91780

DRAWING No. AA-61-C

PLATE 1 of 2

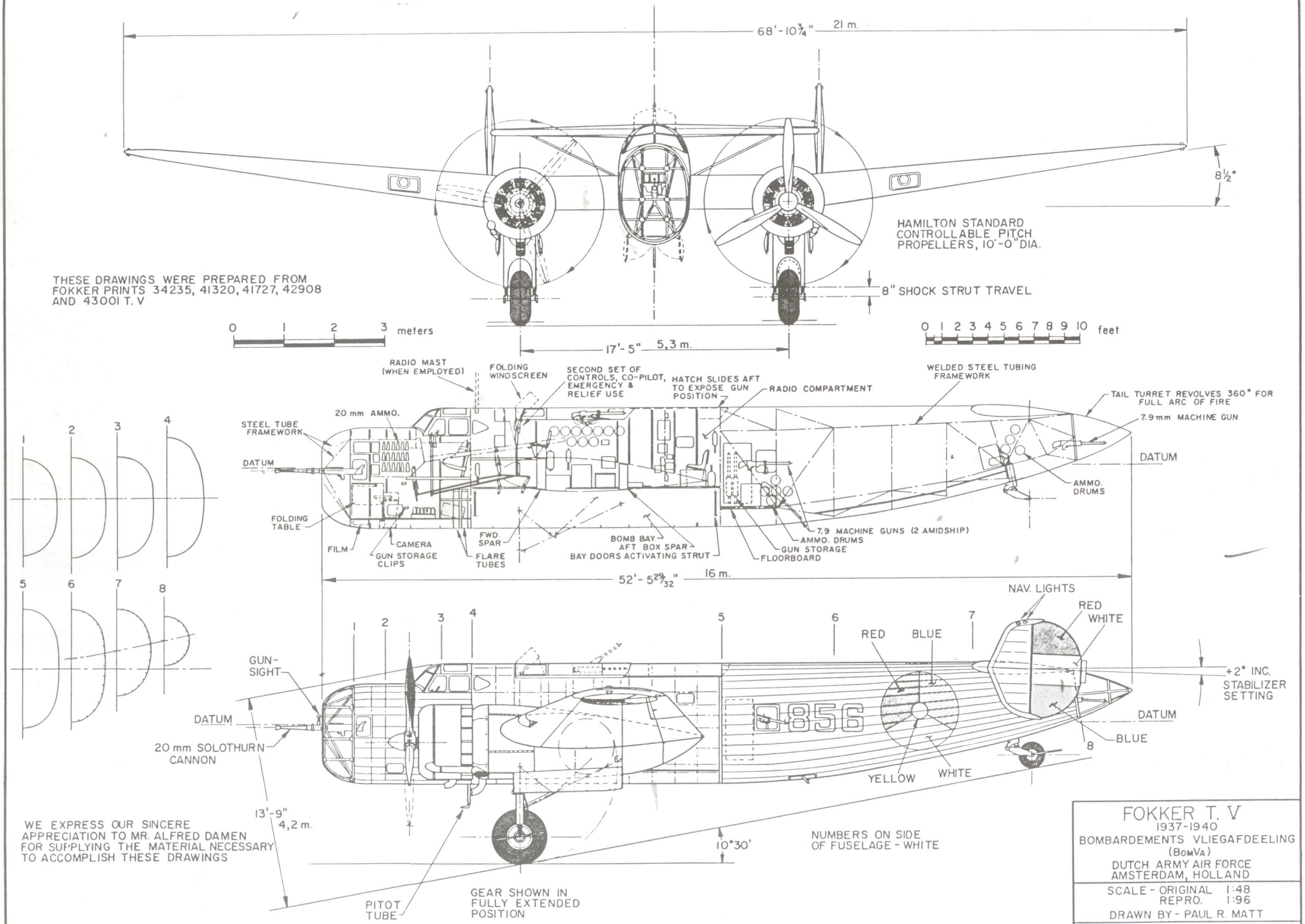

THESE DRAWINGS WERE PREPARED FROM FOKKER PRINTS 34235, 41320, 41727, 42908 AND 43001 T. V

WE EXPRESS OUR SINCERE APPRECIATION TO MR. ALFRED DAMEN FOR SUPPLYING THE MATERIAL NECESSARY TO ACCOMPLISH THESE DRAWINGS

FOKKER T. V

1937-1940

BOMBARDEMENTS VLIEGAFDEELING (BOMVA)

DUTCH ARMY AIR FORCE AMSTERDAM, HOLLAND

SCALE - ORIGINAL 1:48
REPRO. 1:96

DRAWN BY - PAUL R. MATT

© AERO ALBUM 1969
P. O. BOX 33
TEMPLE CITY, CALIF. 91780

DRAWING No. AA-61-C