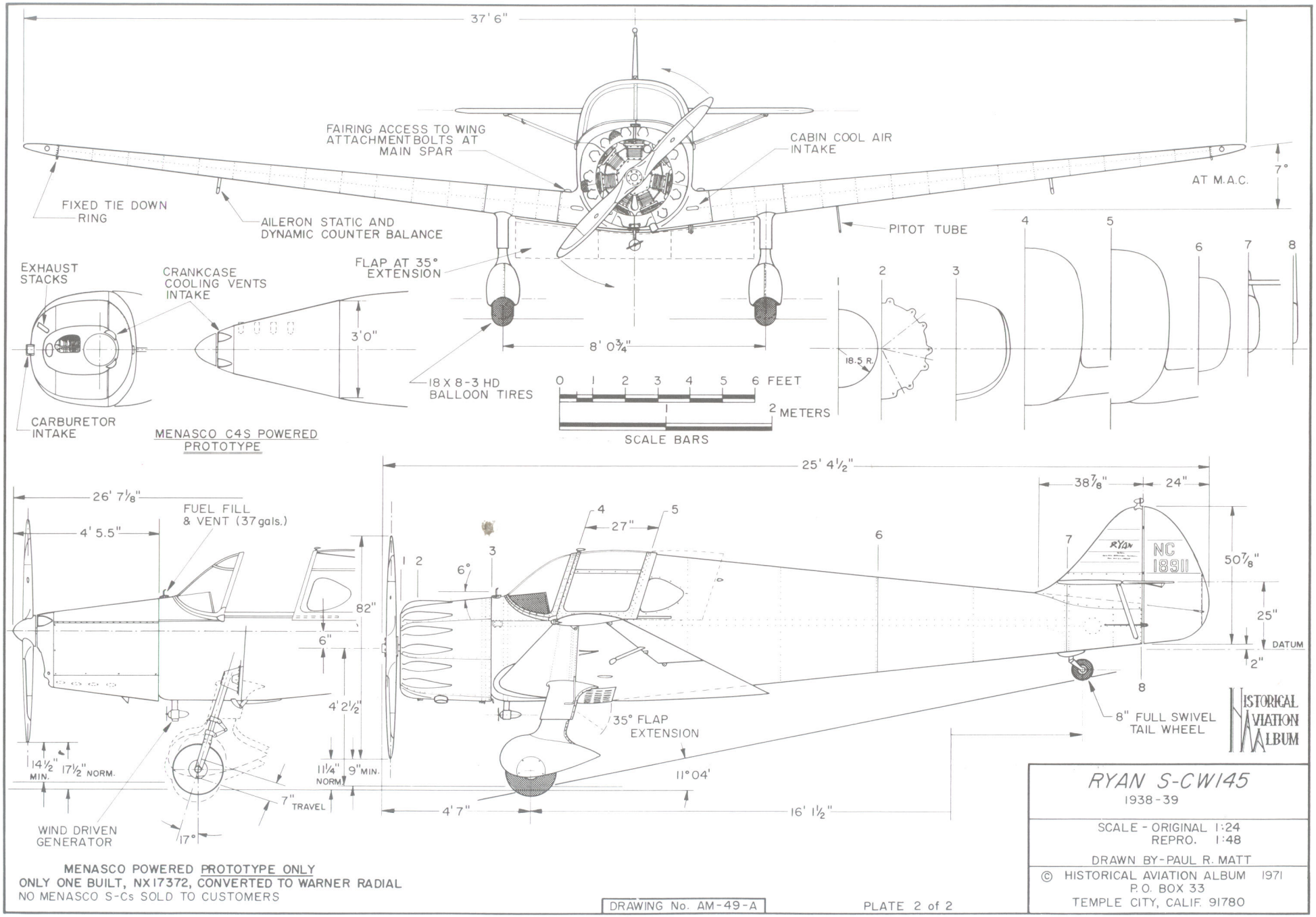

MENASCO POWERED PROTOTYPE ONLY
ONLY ONE BUILT, NX17372, CONVERTED TO WARNER RADIAL
NO MENASCO S-Cs SOLD TO CUSTOMERS

DRAWING No. AM-49-A

PLATE 2 of 2

RYAN S-CW145

1938-39

SCALE - ORIGINAL 1:24
REPRO. 1:48

DRAWN BY-PAUL R. MATT

© HISTORICAL AVIATION ALBUM 1971
P.O. BOX 33
TEMPLE CITY, CALIF. 91780

GENERAL SPECIFICATIONS
ST-A, MENASCO C-4, 125 hp ENGINE

WEIGHT EMPTY	1,035 lbs.
USEFUL LOAD	565 lbs.
GROSS WEIGHT (MAX.)	1,600 lbs.
MAXIMUM SPEED AT S.L.	150 mph
CRUISING SPEED AT 2,000 FT.	127 mph
RANGE AT CRUISE	380 miles
CLIMB AT S.L. (MAX. EFFORT)	1,200 ft./min.
SERVICE CEILING	17,500 feet
LANDING SPEED, WITH FLAPS	60 mph
LANDING SPEED, FLAPS UP	70 mph
TAKEOFF RUN, FULL LOAD	175 yards
WING AREA	124 sq. ft.
POWER LOADING	12.8 lbs./hp
WING LOADING	12.9 lbs/sq. ft.

POWER - MENASCO C-4 FOUR CYLINDER
INVERTED INLINE AIRCOOLED
ENGINE RATED 125 H.P. AT 2,175 RPM

NOTE:
NC 14985, c/n 117 WAS BUILT AS A 95 H.P. MENASCO B-4 POWERED ST MODEL ORIGINALLY. IT BECAME AN ST-A LATER WHEN A 125 H.P. MENASCO D-4 ENGINE WAS INSTALLED.

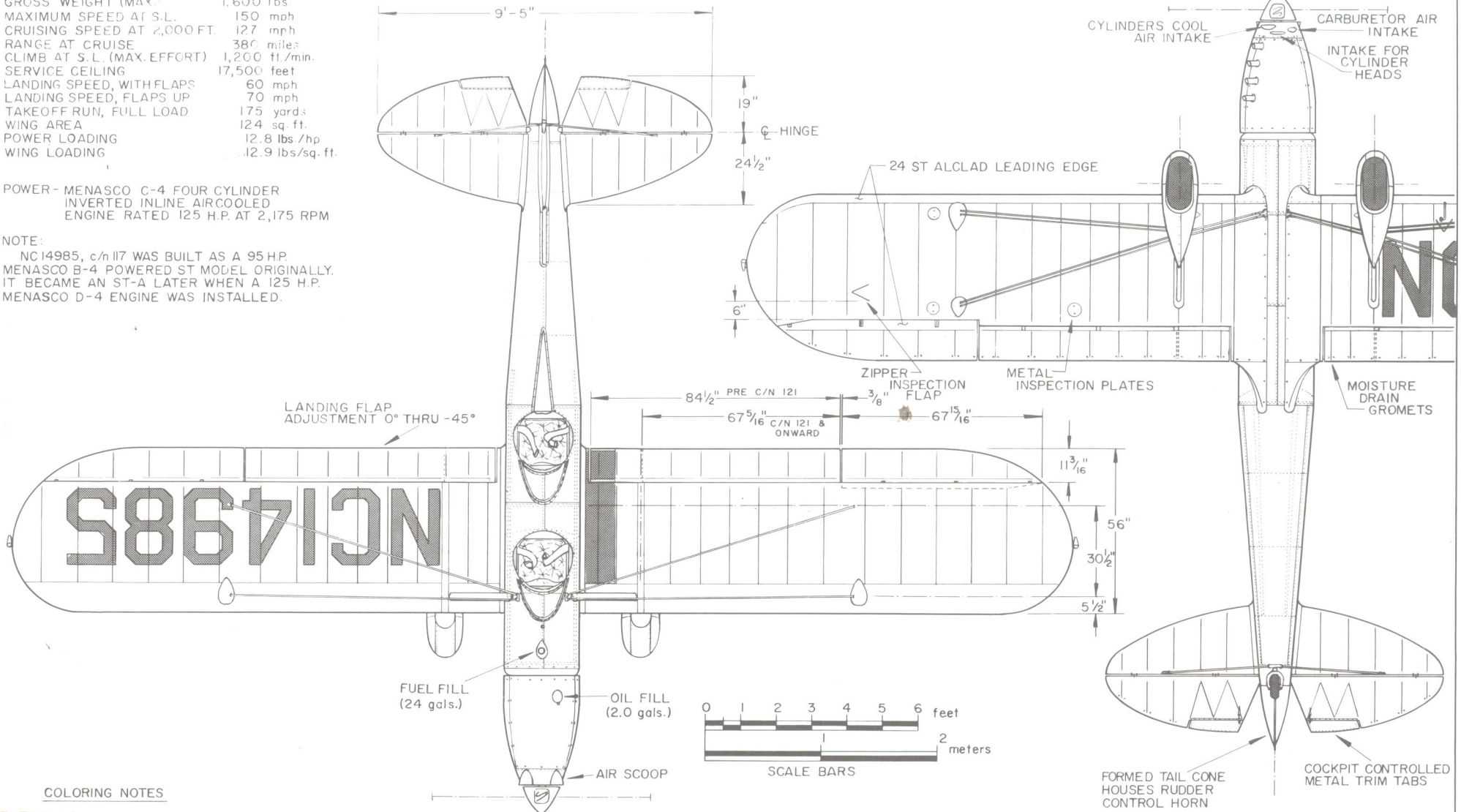

COLORING NOTES

ENTIRE AIRCRAFT NATURAL ALUMINUM FABRIC COVERED AREA, MATCHING SILVER DOPE LICENSE NUMBERS & DETAILS, BLACK INTERIOR OF COCKPIT AREA UPHOLSTERED IN RED OR BLACK LEATHERETTE, INSTRUMENT PANEL BLACK "CRINKLE" FINISH, CONTROL STICK AND WING FLAP CONTROL LEVER CHROME PLATED.

CONSTRUCTION NOTES

FUSELAGE - ALL METAL, MONOCOQUE, ALCLAD 24 ST SKIN.
WINGS - SPRUCE SPARS, STAMPED ALUMINUM ALLOY RIBS, STEEL TUBE COMPRESSION MEMBERS, STEEL CABLE TIE LINES, FABRIC COVERED.
AILERONS & WING FLAPS - STEEL TUBE SPAR, ALUMINUM ALLOY RIBS, FABRIC COVERED.
TAIL SURFACES - RIVETED 24 ST ALUMINUM TUBING AND ALLOY RIBS, FABRIC COVERED.

MY SINCERE APPRECIATION IS EXTENDED TO MESSERS. T. CLAUDE RYAN, WILLIAM WAGNER, AND MAC CATRELL OF THE RYAN AERONAUTICAL CORP., E.V. CASSAGNERES AND FLOYD CARTER FOR THEIR VALUABLE AND UNSELFISH HELP IN THE PREPARATION OF THESE DRAWINGS

HISTORICAL AVIATION ALBUM

RYAN ST-A
c/n 117 NC14985
1936

SCALE - ORIGINAL 1:24
REPRO. 1:48
DRAWN BY - PAUL R. MATT

© HISTORICAL AVIATION ALBUM 1971
P.O. BOX 33

HISTORICAL AVIATION ALBUM 1971
P.O. BOX 33
TEMPLE CITY, CALIF. 91780

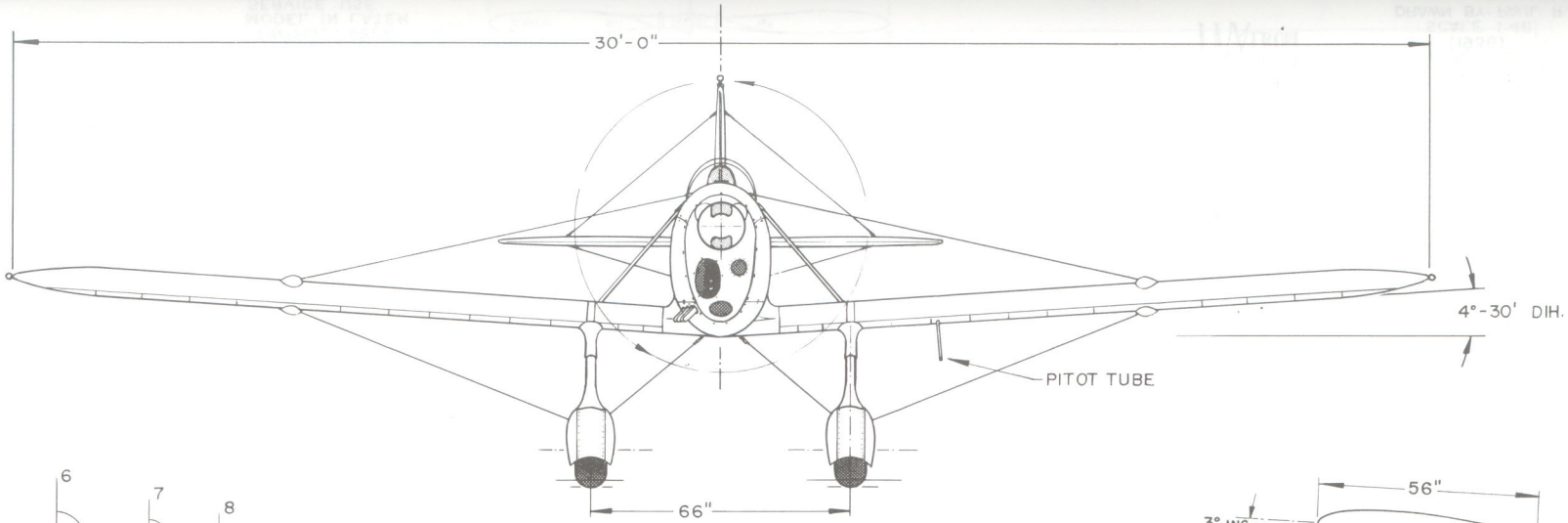

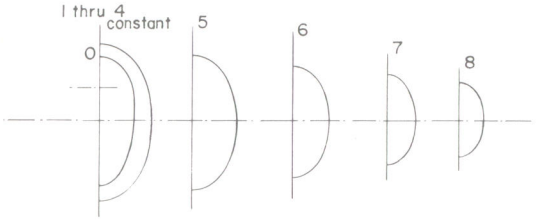

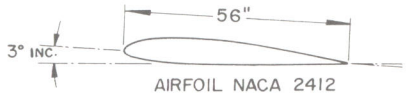

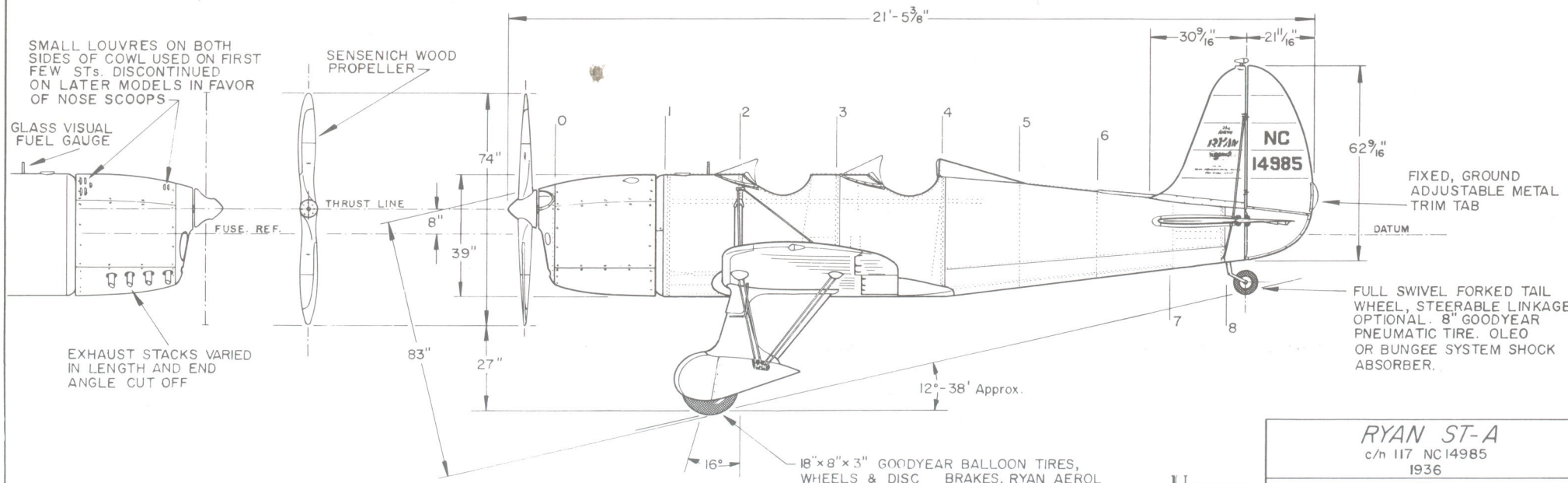

HISTORICAL AVIATION ALBUM

RYAN ST-A
c/n 117 NC14985
1936

SCALE - ORIGINAL 1:24
REPRO. 1:48
DRAWN BY - PAUL R. MATT

© HISTORICAL AVIATION ALBUM 1971
P.O. BOX 33
TEMPLE CITY, CALIF. 91780

GENERAL SPECIFICATIONS

WEIGHT EMPTY	2730	lbs.
USEFUL LOAD	1320	"
GROSS WEIGHT	4050	"
TOP SPEED	168	mph
CRUISING SPEED	120	"
LANDING SPEED, WITH FLAPS	60	"
RATE OF CLIMB	650	ft./min.
FUEL CAPACITY	200	gals.
OIL CAPACITY	12	"
SERVICE CEILING	15,000	ft.
WING AREA, INCL. AILERONS	220	sq ft.

PERFORMANCE FIGURES APPROXIMATE BASED UPON PILOT'S EXPERIENCES, EXACT DATA NOT AVAILABLE

POWER - PRATT & WHITNEY R-985-11
400 H.P. AT 2,200 rpm at 5,000 ft.
450 H.P. AT 2,300 rpm - MILITARY RATING

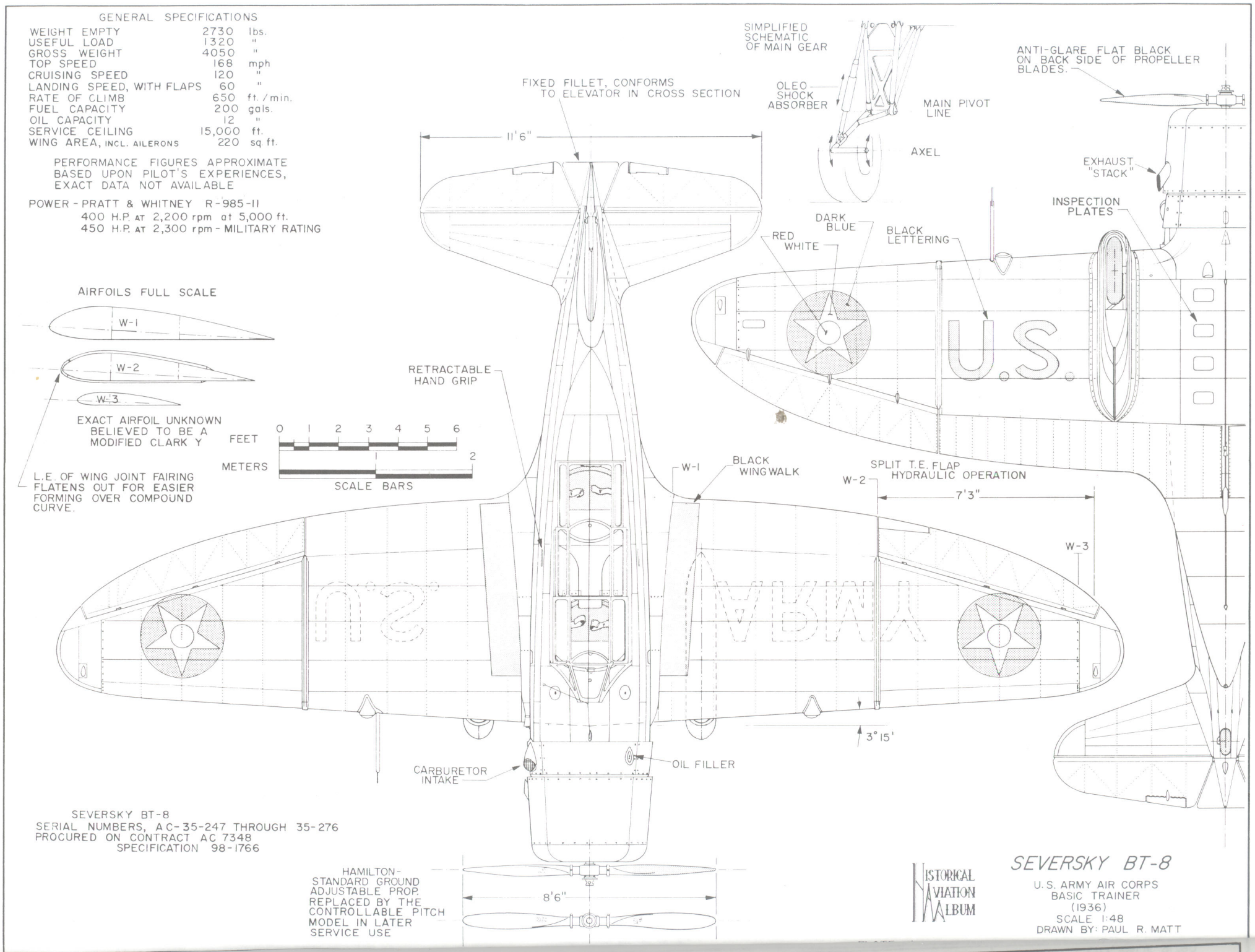

SEVERSKY BT-8
SERIAL NUMBERS, AC-35-247 THROUGH 35-276
PROCURED ON CONTRACT AC 7348
SPECIFICATION 98-1766

HISTORICAL AVIATION ALBUM

SEVERSKY BT-8

U.S. ARMY AIR CORPS
BASIC TRAINER
(1936)
SCALE 1:48
DRAWN BY: PAUL R. MATT

SCALE 1:48
DRAWN BY: PAUL R. MATT

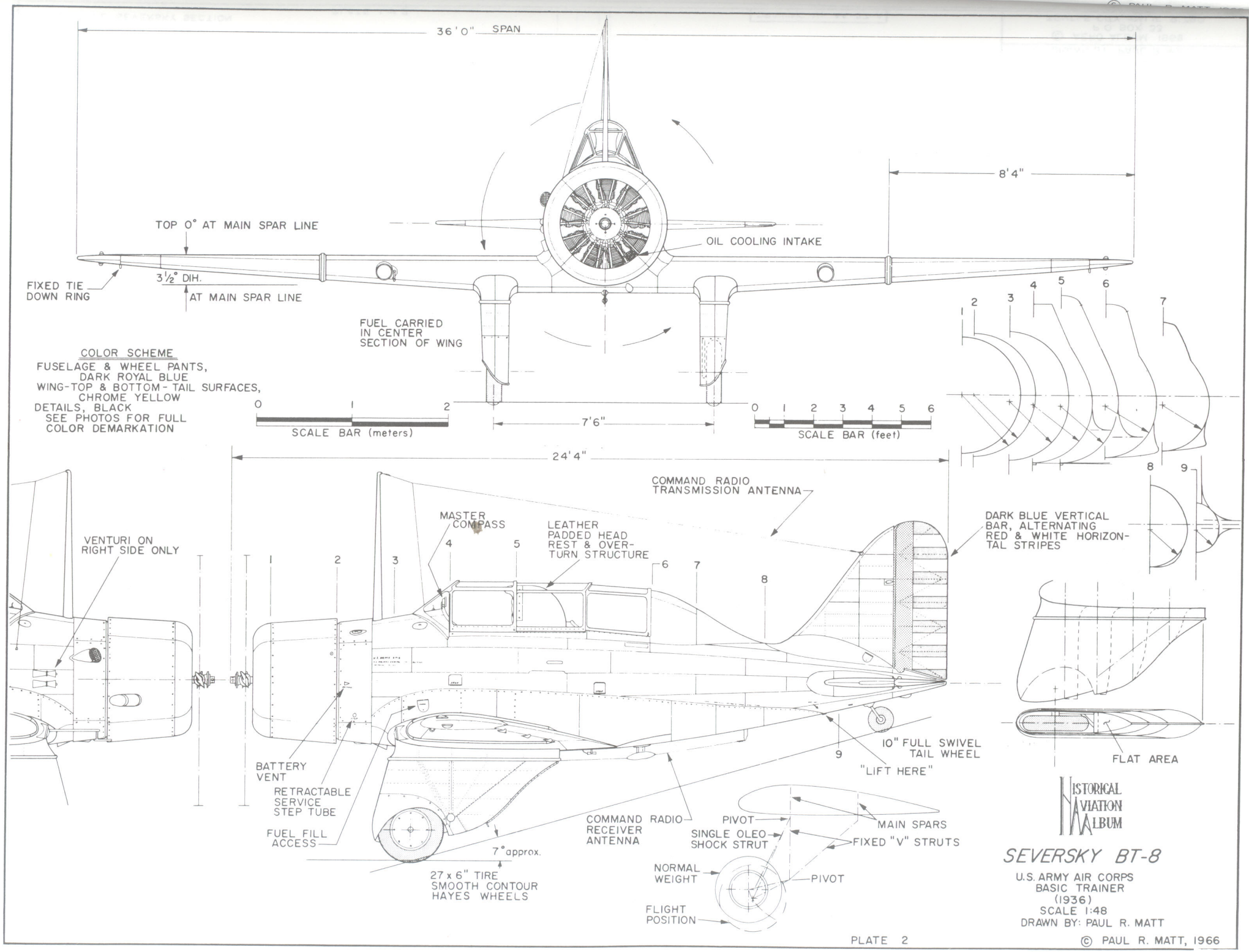

© PAUL R. MATT, 1966

GENERAL SPECIFICATIONS

WEIGHT EMPTY	4,318 lbs.
USEFUL LOAD	1,284 lbs.
GROSS WEIGHT	5,602 lbs.
WING AREA	220 sq. ft.
MAXIMUM SPEED	281 m.p.h. at 10,000 feet
CRUISING SPEED	200 m.p.h. approx.
STALLING SPEED	78 m.p.h.
CLIMB, INITIAL	3,175 ft./min.
SERVICE CEILING	29,685 ft.
FUEL CAPACITY	200 gals.
OIL CAPACITY	12 gals.
RANGE AT CRUISE	1,000 miles

POWER - P & W R-1830-9 TWIN WASP 950 h.p. max.

ARMAMENT - TWO .30 cal. OR ONE .30 cal. & ONE .50 cal. BROWNING MACHINE GUNS

INDIAN HEAD INSIGNIA, P-35 AIRCRAFT, 94th PURSUIT SQUADRON

FACE BROWN WITH BLACK, BLUE & RED MARKINGS, WAR BONNET WHITE FEATHERS TIPPED WITH BLUE, YELLOW & BLUE HEAD BANDS, RIBBONS RED & BLUE

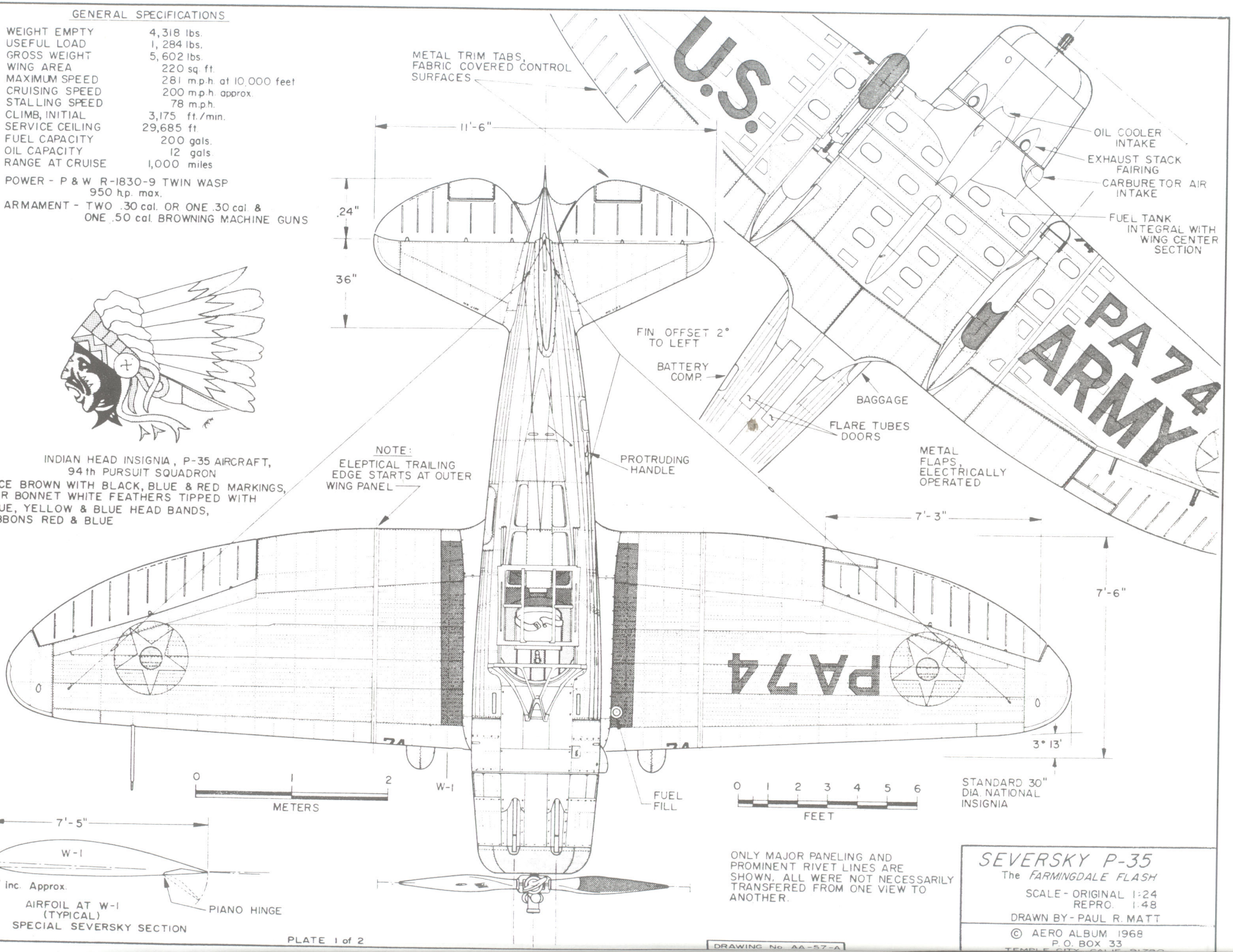

AIRFOIL AT W-1 (TYPICAL)
SPECIAL SEVERSKY SECTION

ONLY MAJOR PANELING AND PROMINENT RIVET LINES ARE SHOWN. ALL WERE NOT NECESSARILY TRANSFERED FROM ONE VIEW TO ANOTHER.

SEVERSKY P-35

The *FARMINGDALE FLASH*

SCALE - ORIGINAL 1:24
REPRO. 1:48

DRAWN BY - PAUL R. MATT

© AERO ALBUM 1968
P.O. BOX 33

PLATE 1 of 2

DRAWING No. AA-57-A

36'-0"

P.O. BOX 33
TEMPLE CITY, CALIF. 91780

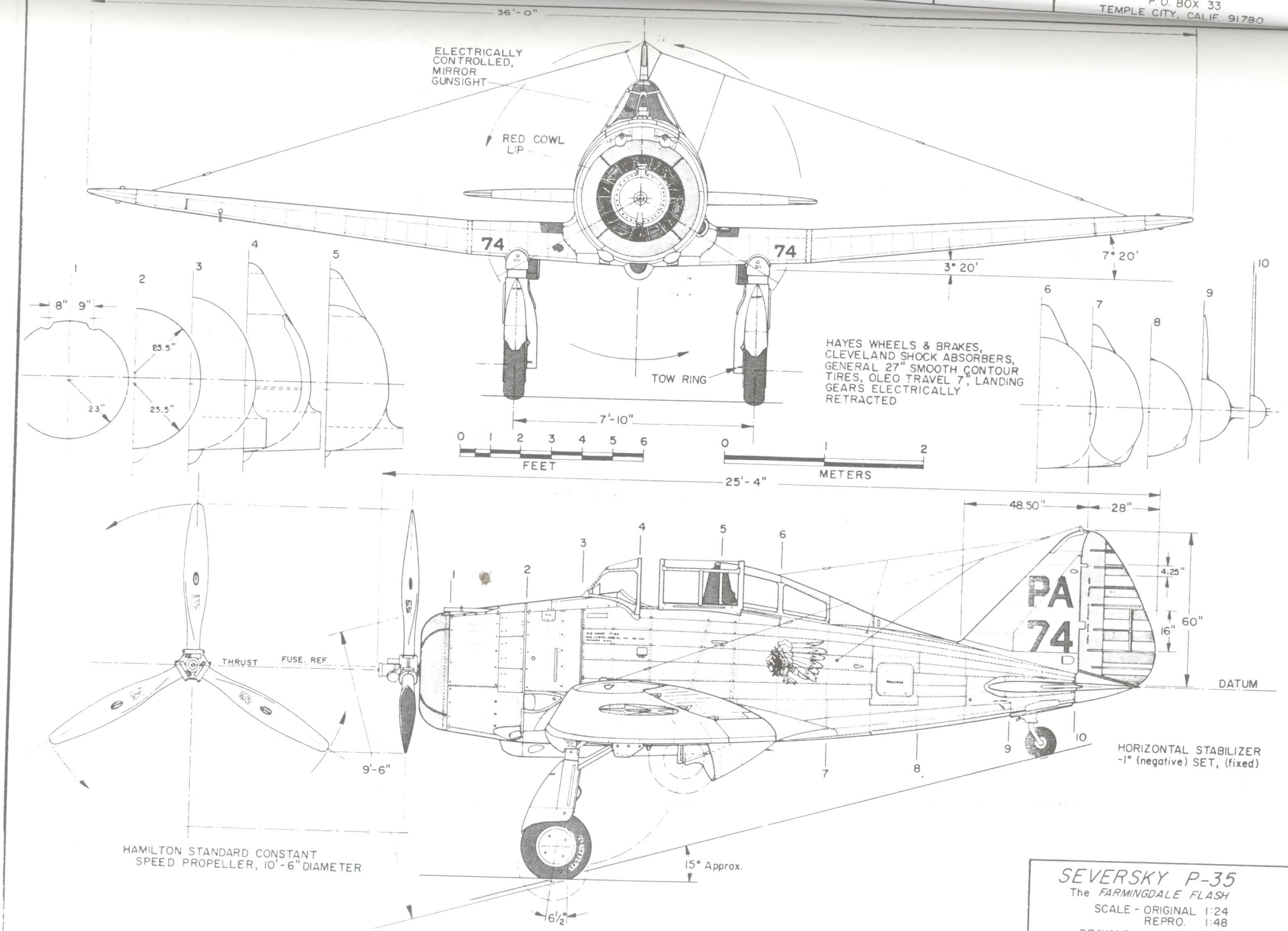

PLATE 2 of 2

DRAWING No. AA-57-A

SEVERSKY P-35

The *FARMINGDALE FLASH*

SCALE - ORIGINAL 1:24
REPRO. 1:48

DRAWN BY - PAUL R. MATT

© AERO ALBUM 1968
P.O. BOX 33
TEMPLE CITY, CALIF. 91780

Sikorsky S-39B

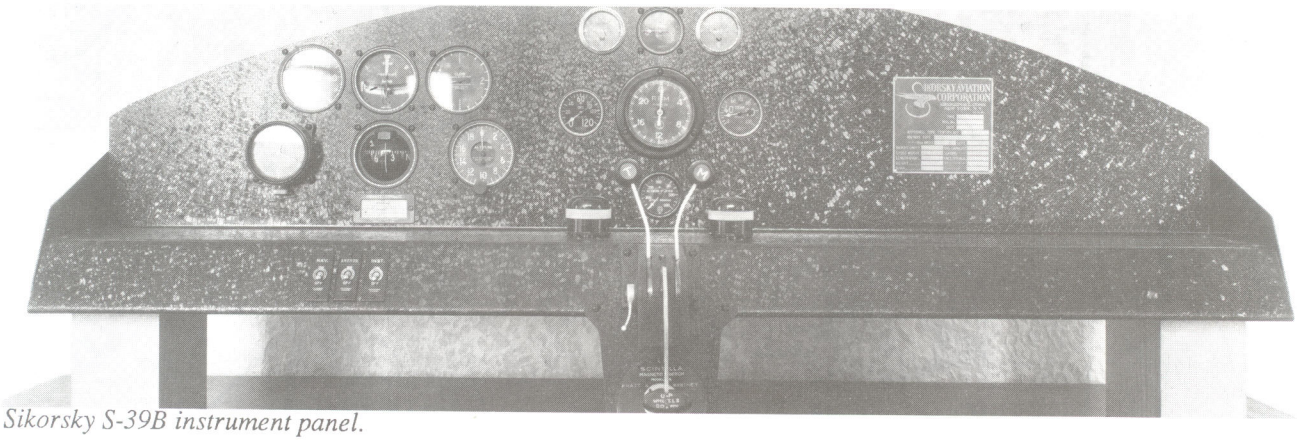

Sikorsky S-39B instrument panel.

Sikorsky S-39B interior.

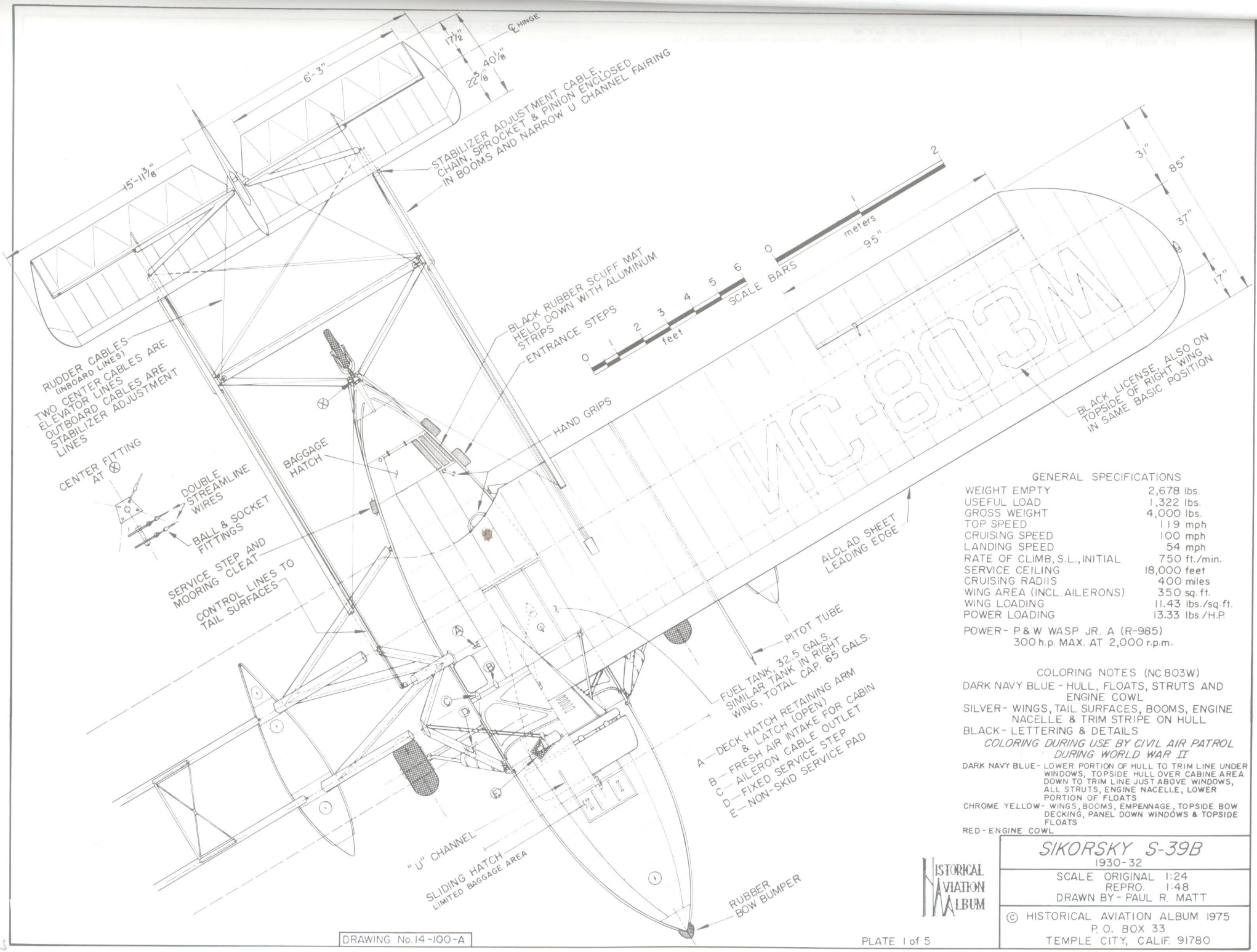

GENERAL SPECIFICATIONS

WEIGHT EMPTY	2,678 lbs.
USEFUL LOAD	1,322 lbs.
GROSS WEIGHT	4,000 lbs.
TOP SPEED	119 mph
CRUISING SPEED	100 mph
LANDING SPEED	54 mph
RATE OF CLIMB, S.L., INITIAL	750 ft./min.
SERVICE CEILING	18,000 feet
CRUISING RADIIS	400 miles
WING AREA (INCL. AILERONS)	350 sq. ft.
WING LOADING	11.43 lbs./sq. ft.
POWER LOADING	13.33 lbs./H.P.

POWER - P & W WASP JR. A (R-985)
300 h.p. MAX. AT 2,000 r.p.m.

COLORING NOTES (NC 803W)

DARK NAVY BLUE - HULL, FLOATS, STRUTS AND ENGINE COWL
SILVER - WINGS, TAIL SURFACES, BOOMS, ENGINE NACELLE & TRIM STRIPE ON HULL
BLACK - LETTERING & DETAILS

COLORING DURING USE BY CIVIL AIR PATROL DURING WORLD WAR II

DARK NAVY BLUE - LOWER PORTION OF HULL TO TRIM LINE UNDER WINDOWS, TOPSIDE HULL OVER CABINE AREA DOWN TO TRIM LINE JUST ABOVE WINDOWS, ALL STRUTS, ENGINE NACELLE, LOWER PORTION OF FLOATS
CHROME YELLOW - WINGS, BOOMS, EMPENNAGE, TOPSIDE BOW DECKING, PANEL DOWN WINDOWS & TOPSIDE FLOATS
RED - ENGINE COWL

HISTORICAL AVIATION ALBUM

SIKORSKY S-39B
1930-32

SCALE ORIGINAL 1:24
REPRO. 1:48
DRAWN BY - PAUL R. MATT

© HISTORICAL AVIATION ALBUM 1975
P. O. BOX 33
TEMPLE CITY, CALIF. 91780

DRAWING No. 14-100-A

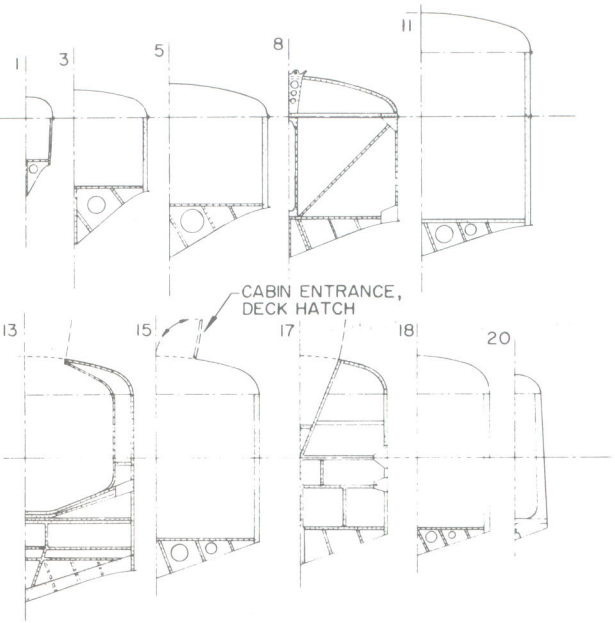

1. STABILIZER ADJUSTMENT WHEEL
2. LANDING GEAR PUMP
3. PARKING BRAKE
4. WHEEL BRAKES
5. ENGINE CONTROLS
6. HATCH LOCK BAR & CATCH
7. BOAT HOOK
8. FOLDING STEP & PART OF SEAT BACKREST
9. INSIDE STEP
10. COMPASS
11. BATTERY BOX
12. HANDHOLD
13. LANDING GEAR VALVES
14. BAGGAGE COMPARTMENT
15. FIXED HATCH LOCK ARMS

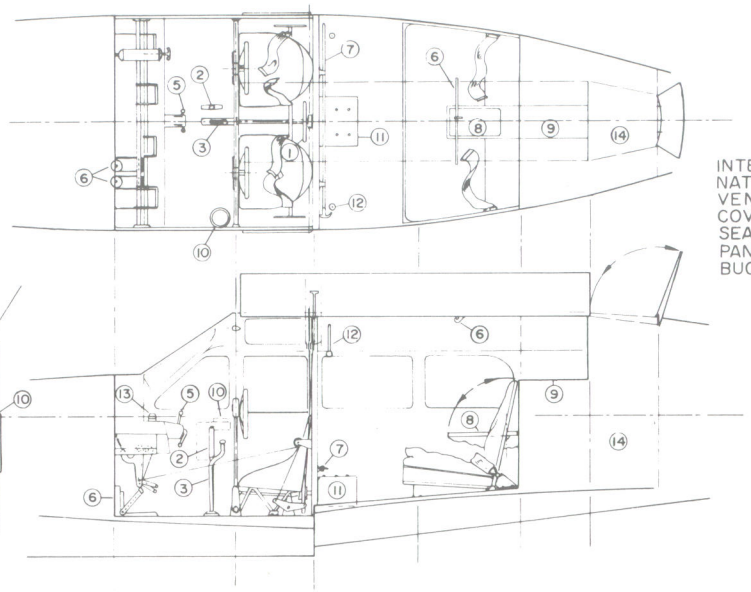

INTERIOR FINISH - NATURAL MAHOGANY VENEER, LEATHER COVERED REAR BENCH SEAT, INSTRUMENT PANEL, CONTROLS, FRONT BUCKET SEATS - BLACK

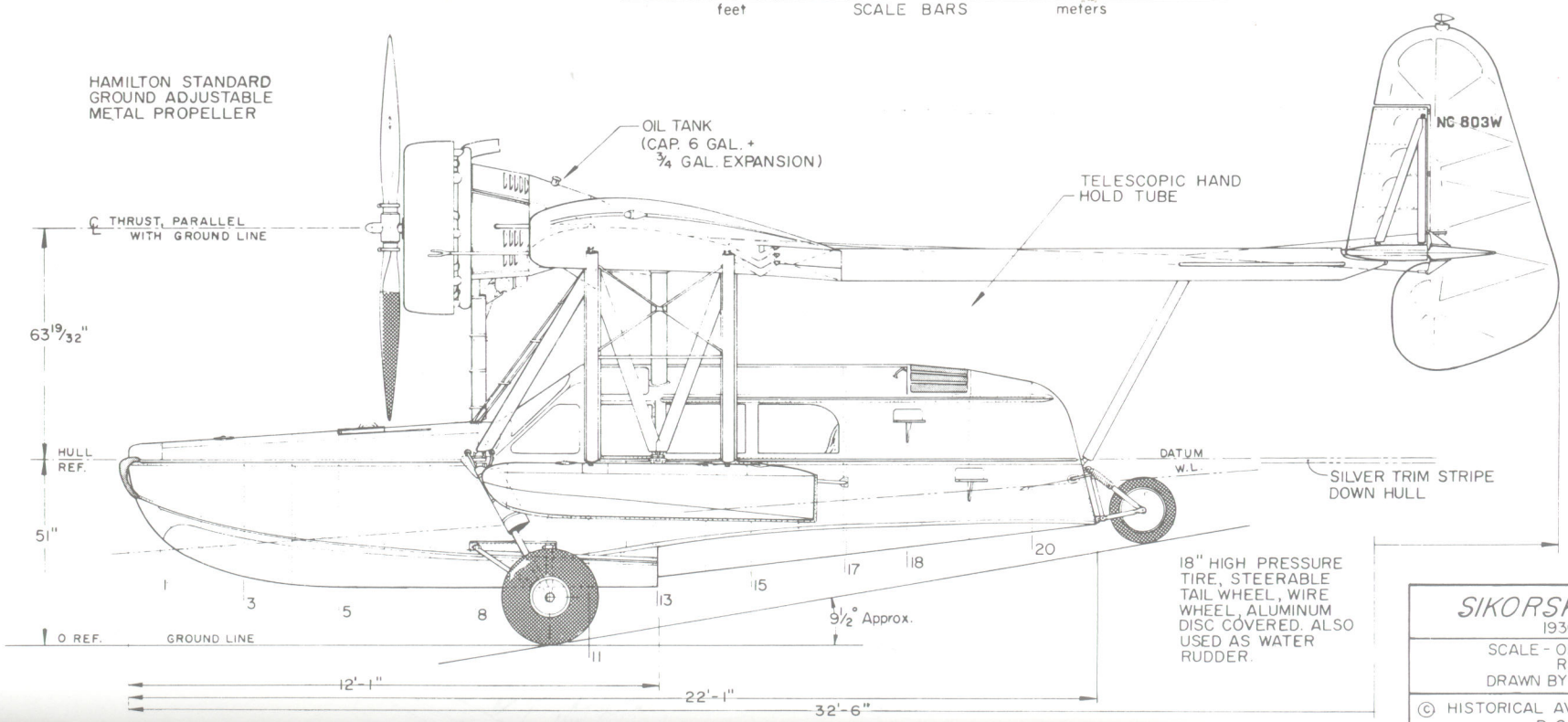

HISTORICAL AVIATION ALBUM

SIKORSKY S-39B

1930-32

SCALE - ORIGINAL 1:24
REPRO. 1:48
DRAWN BY - PAUL R. MATT

© HISTORICAL AVIATION ALBUM 1975
P. O. BOX 33
TEMPLE CITY, CALIF. 91780

DRAWING No. 14-100-A

OUTRIGGER

ALL DIMENSIONS IN WING PANEL LAYOUT ARE IN INCHES

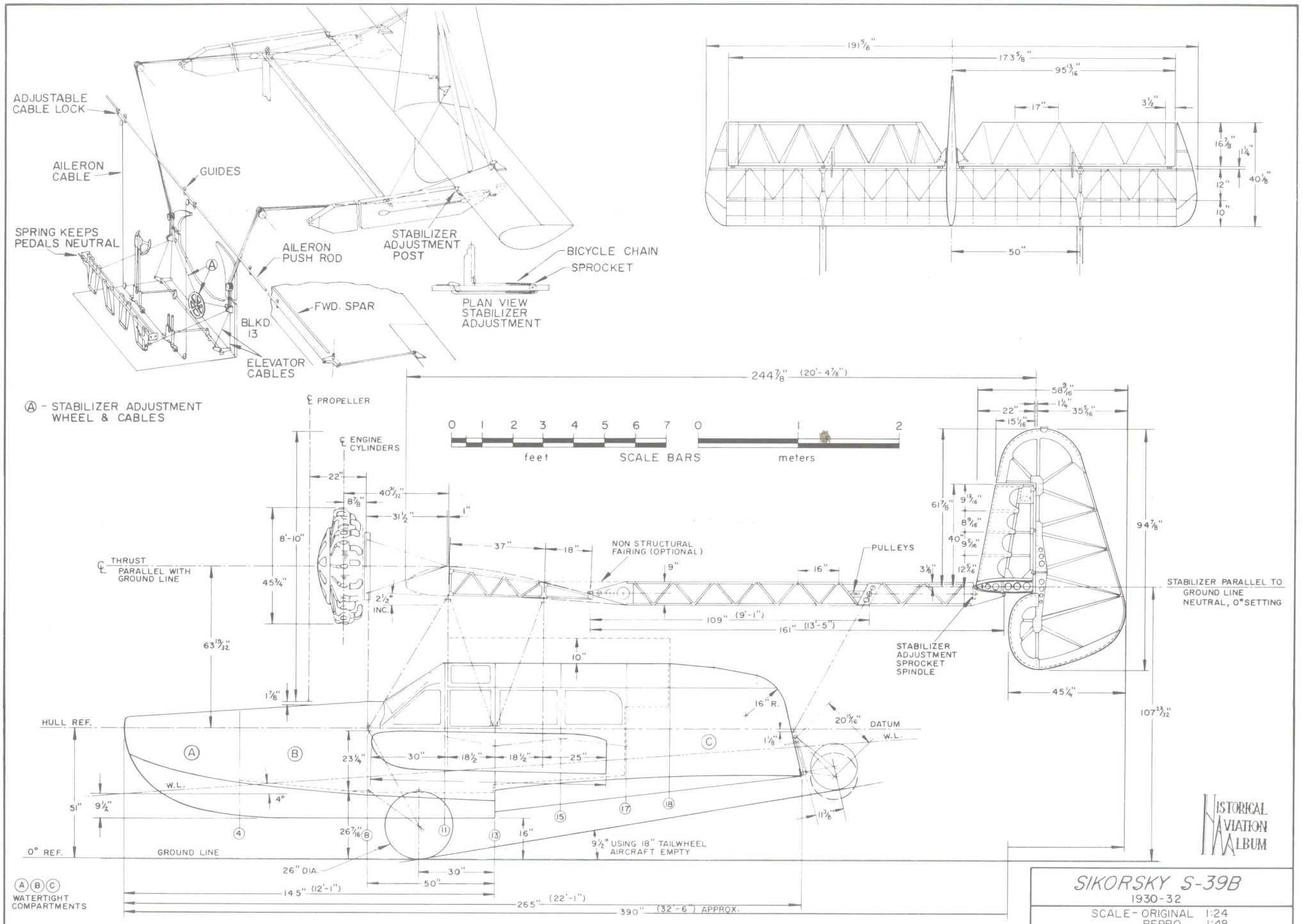

SIKORSKY S-39B

1930-32

SCALE - ORIGINAL 1:24
REPRO. 1:48
DRAWN BY - PAUL R. MATT

© HISTORICAL AVIATION ALBUM 1975
P. O. BOX 33

DRAWING No. 14-100-A

HYDRAULIC RETRACTING SYSTEM
S-39 LANDING GEAR

THE OLEO STRUT HAS TWO HYDRAULIC LINES, ONE AT THE TOP AND

KEYS (LOCK PINS)

OLEO STRUT

P.O. BOX 33
TEMPLE CITY, CALIF. 91780

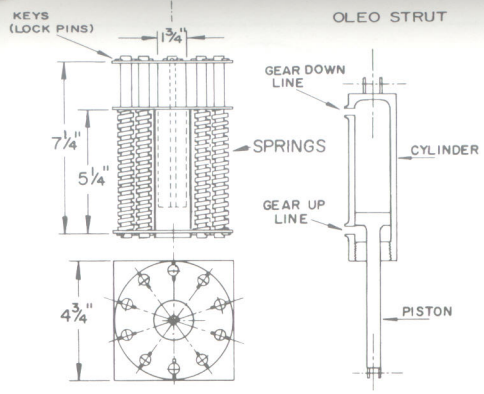

HYDRAULIC SHOCK ACCUMULATOR FOR RAISING AND LOWERING LANDING GEAR. TWO REQUIRED, ONE FOR RIGHT & ONE FOR LEFT GEAR

HYDRAULIC RETRACTING SYSTEM S-39 LANDING GEAR

THE OLEO STRUT HAS TWO HYDRAULIC LINES, ONE AT THE TOP AND ONE AT THE BOTTOM OF THE CYLINDER. TWO SHOCK ACCUMULATORS, ONE FOR EACH LANDING GEAR, WHICH ARE MOUNTED IN THE FORWARD BAGGAGE COMPARTMENT AT STATION No. 8.

ON THE CENTER INSTRUMENT PANEL IS A GEAR-UP OR GEAR-DOWN SELECTOR HANDLE. A HAND PUMP, BETWEEN THE PILOT'S SEATS, IS USED TO PUMP FLUID FROM A RESERVOIR TANK, THROUGH THE PUMP AND OUT TO THE OLEO STRUT. IF THE SELECTOR HANDLE IS UP, THE FLUID WILL BE PUMPED TO THE BOTTOM OF THE CYLINDER; IF DOWN, THE FLUID GOES TO THE TOP OF THE CYLINDER, EFFECTIVELY EXTENDING OR PUSHING THE LANDING GEAR DOWN.

UPON LANDING ON LAND, THE INITIAL SHOCK IS TAKEN BY THE TIRES, THEN TRANSFERRED TO THE HYDRAULIC SHOCK ACCUMULATOR. THE IMPACT FORCES THE FLUID OUT OF THE STRUT INTO THE ACCUMULATOR-COMPRESSING THE SPRINGS AND RESULTING ABSORBTION.

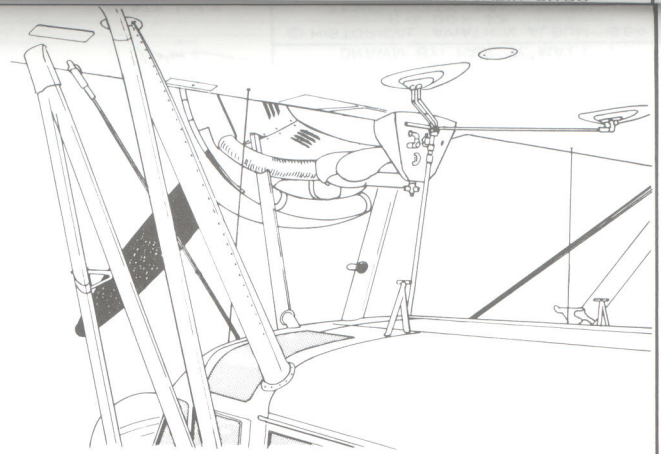

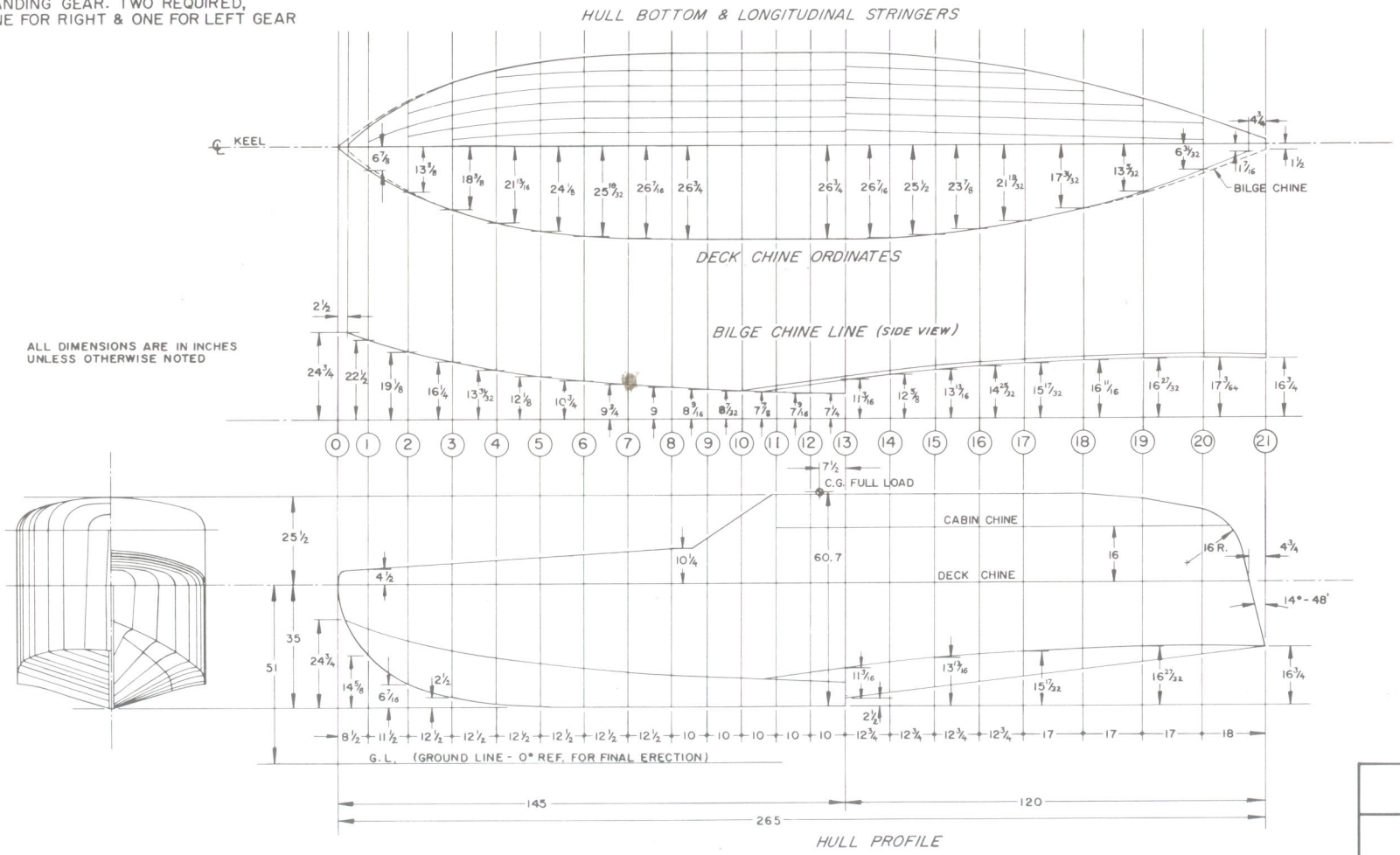

HISTORICAL AVIATION ALBUM

SIKORSKY S-39B
1930-32

SCALE - ORIGINAL 1:24
REPRO. 1:48
DRAWN BY PAUL R. MATT

© HISTORICAL AVIATION ALBUM 1975
P.O. BOX 33
TEMPLE CITY, CALIF. 91780

DRAWING No. 14-100-A

GENERAL SPECIFICATION

WEIGHT EMPTY (INCL. WATER, OIL BUT WITHOUT FUEL)	1,874 lbs.
USEFUL LOAD	426 lbs.
GROSS WEIGHT	2,300 lbs.
WING AREA (INCL. AILERONS)	429 sq.ft.
AILERON AREA, EACH	21 sq.ft.
HIGH SPEED	85 mph
NORMAL CRUISE	68 mph
LANDING SPEED	37 mph
FUEL CAPACITY	30 gals.
OIL CAPACITY	3 gals.

POWER: VIRTUALLY ANY IN-LINE ENGINE OF THE ERA 90hp TO 180hp

COMMON ENGINES USED:

CURTISS OX-5	90 hp
HALL-SCOTT A-7	90 hp
A-7A	100 hp
A-5	125 hp
HISPANO-SUIZA-A	150 hp
-B	180 hp
ROBERTS	100 hp

COLORING NOTES

ENTIRE AIRCRAFT CLEAR DOPED OR SILVER PIGMENTED, METAL DECKING AND COWLING - COLOR OF OWNERS CHOICE

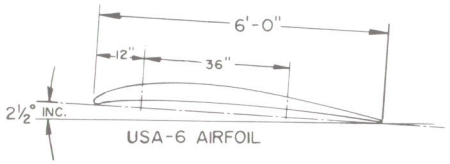

USA-6 AIRFOIL

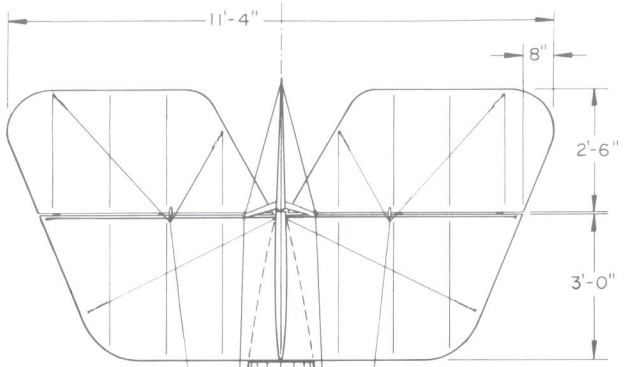

NOTE
ALL TRAILING EDGES OF WINGS AND TAIL SURFACES ARE FORMED WITH SPRUCE WOOD

SCALE BARS

TYPICAL LANDING GEAR

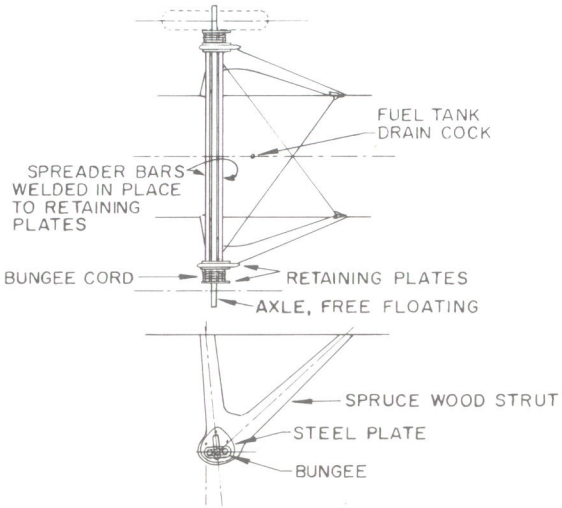

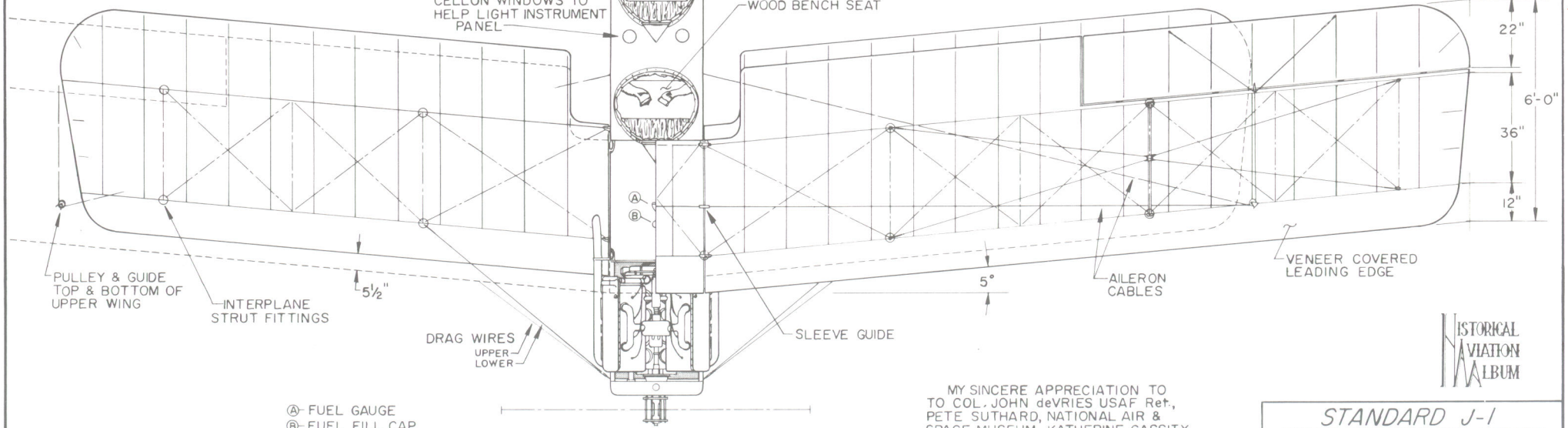

Ⓐ- FUEL GAUGE
Ⓑ- FUEL FILL CAP

MY SINCERE APPRECIATION TO TO COL. JOHN deVRIES USAF Ret., PETE SUTHARD, NATIONAL AIR & SPACE MUSEUM, KATHERINE CASSITY, U.S. AIR FORCE MUSEUM AND LEO. E. OPDYCKE, WW I AERO PUBLICATION FOR THEIR HELP WITH THESE DRAWINGS

HISTORICAL AVIATION ALBUM

STANDARD J-1

TYPICAL, POST WAR, CIVIL, MODIFIED
1917-1926

SCALE: ORIGINAL 1:24
REPRO. 1:48

DRAWN BY: PAUL R. MATT

© HISTORICAL AVIATION ALBUM 1984

DRAWN BY: PAUL R. MATT

© HISTORICAL AVIATION ALBUM 1984
P.O. BOX 33

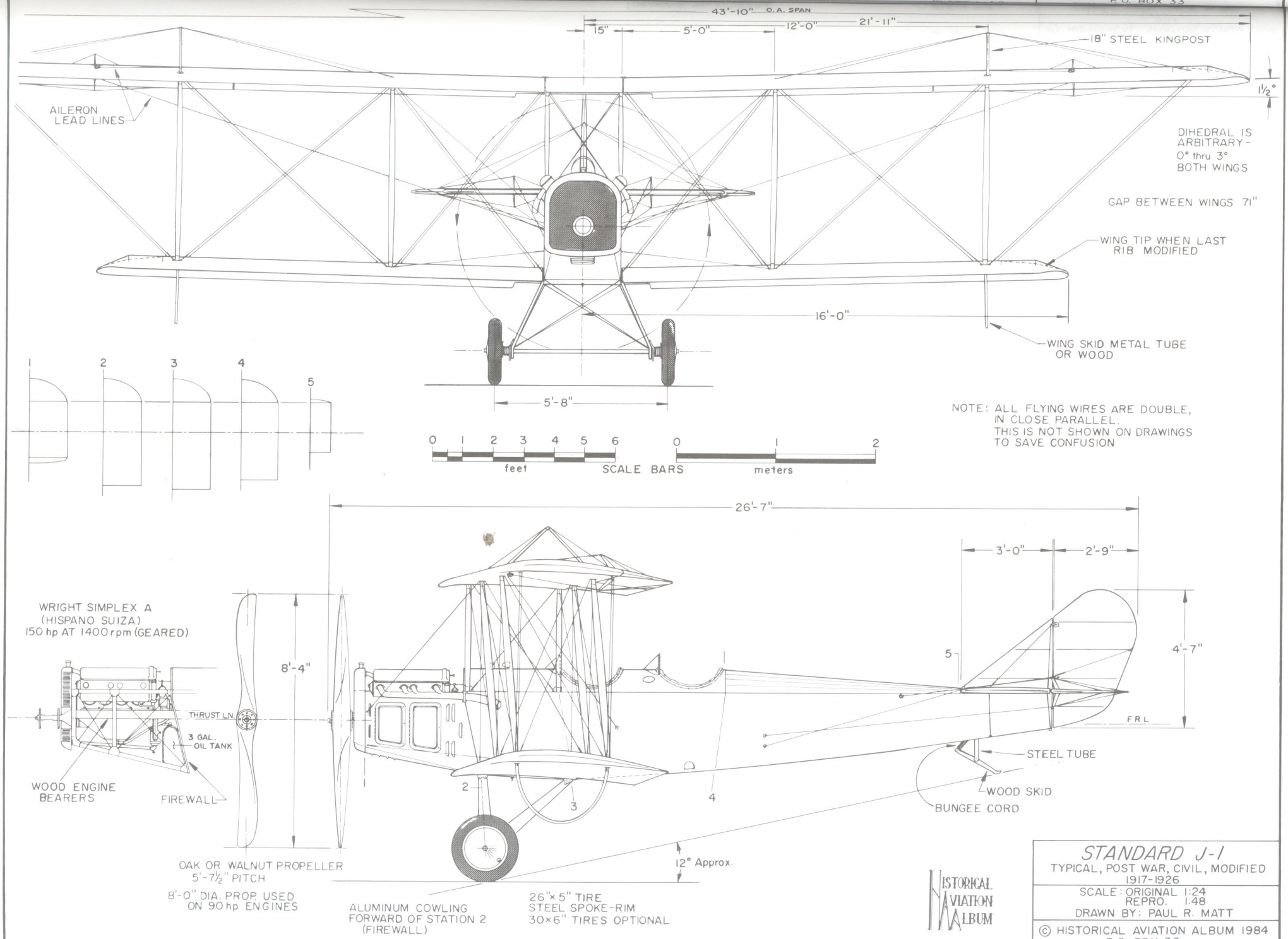

DRAWING No. 17-110-A

PLATE 2 of 2

HISTORICAL AVIATION ALBUM

STANDARD J-1

TYPICAL, POST WAR, CIVIL, MODIFIED
1917-1926

SCALE: ORIGINAL 1:24
REPRO. 1:48

DRAWN BY: PAUL R. MATT

© HISTORICAL AVIATION ALBUM 1984
P.O. BOX 33
TEMPLE CITY, CALIF. 91780

GENERAL SPECIFICATIONS

WEIGHT EMPTY	525 lbs.
USEFUL LOAD	400 lbs.
GROSS WEIGHT	925 lbs.
WING AREA	184 lbs.
WING LOADING	6 lbs/sq.ft.
POWER LOADING	22 lbs/H.P.
MAXIMUM SPEED	80 mph at 3000 feet
CRUISING SPEED	68 mph
LANDING SPEED	28 mph
RANGE AT CRUISE	204 miles
SERVICE CEILING	12,000 feet
FUEL CAPACITY	9 gals.
OIL CAPACITY	4 quarts
FUEL CONSUMPTION	3 gal/hr.

POWER: CONTINENTAL A-40-2,
35-37 HP at 2,550 rpm

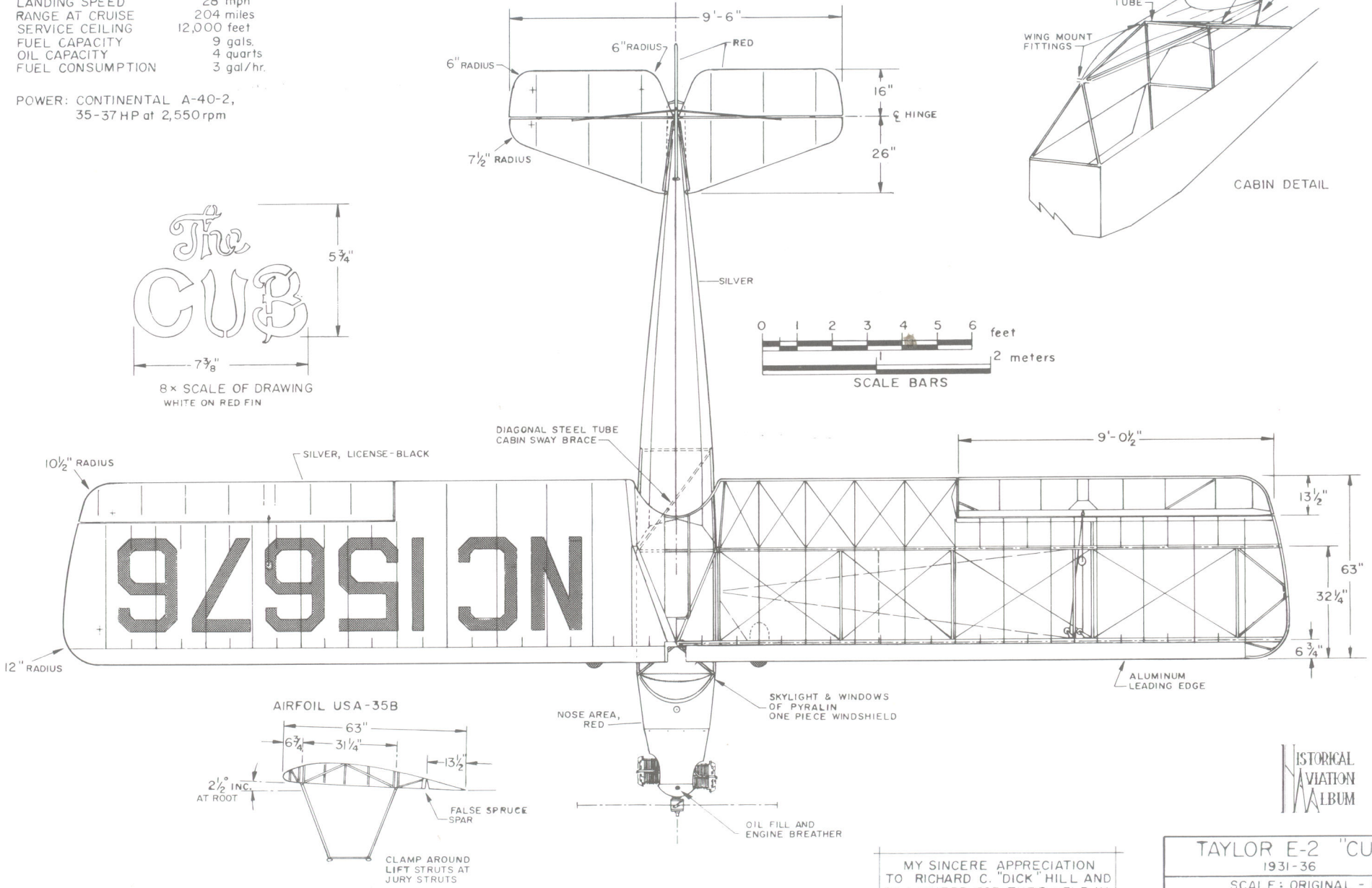

MY SINCERE APPRECIATION TO RICHARD C. "DICK" HILL AND BILL KNEPP FOR THEIR HELP IN THE PREPARATION OF THESE DRAWINGS.

HISTORICAL AVIATION ALBUM

TAYLOR E-2 "CUB"
1931-36

SCALE: ORIGINAL - 1:24
REPRO. - 1:48
DRAWN BY: PAUL R. MATT

© HISTORICAL AVIATION ALBUM 1986
P.O. BOX 33

© HISTORICAL AVIATION ALBUM 1986
P.O. BOX 33
TEMPLE CITY, CALIF. 91780

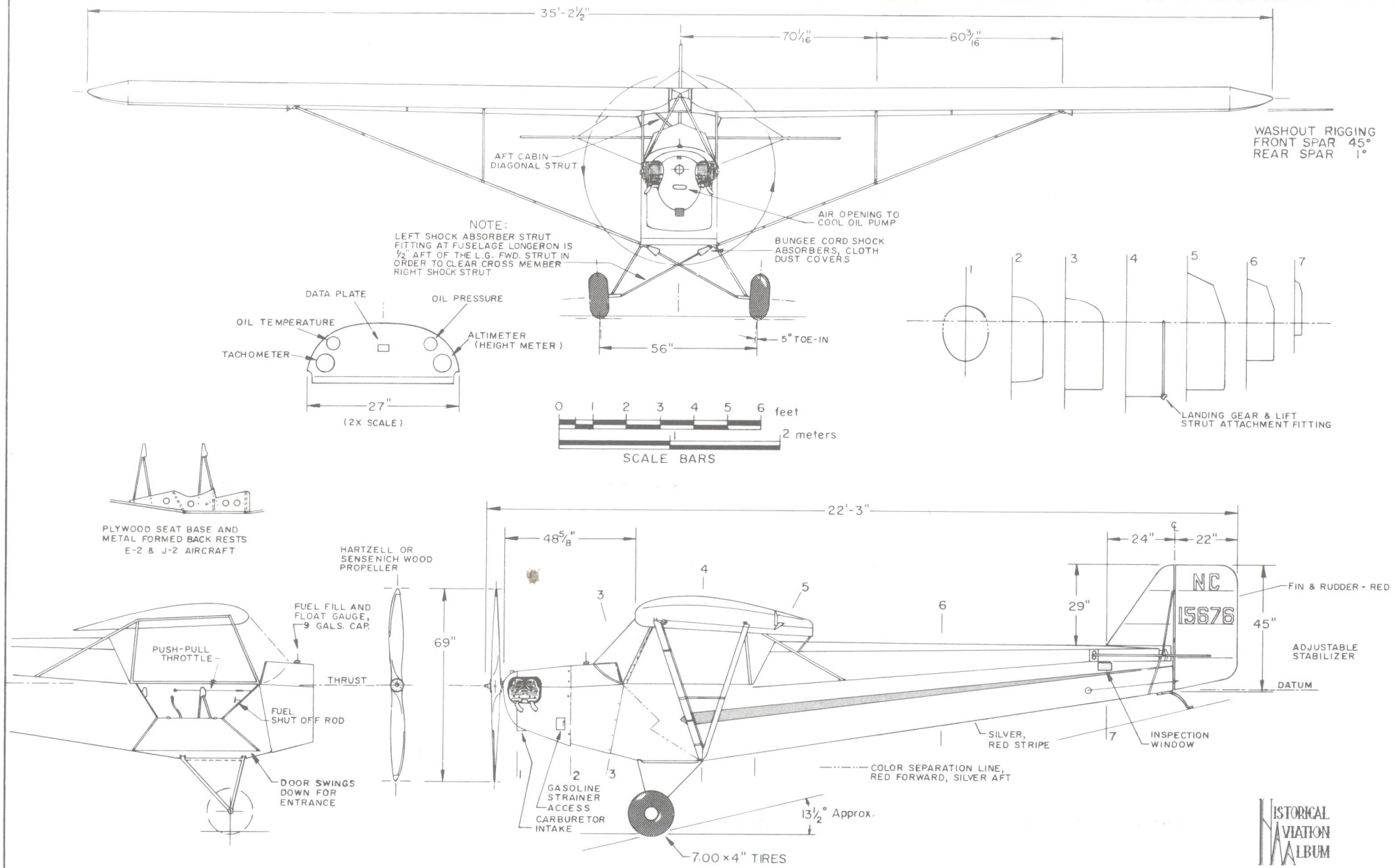

HISTORICAL AVIATION ALBUM

TAYLOR E-2 "CUB" 1931-36
SCALE: ORIGINAL - 1:24 REPRO. - 1:48 DRAWN BY: PAUL R. MATT
© HISTORICAL AVIATION ALBUM 1986 P.O. BOX 33 TEMPLE CITY, CALIF. 91780

GENERAL SPECIFICATIONS

WEIGHT EMPTY	563 lbs.
USEFUL LOAD	407 lbs.
GROSS WEIGHT	970 lbs.
WING AREA	178 sq. ft.
WING LOADING	5.44 lbs/sq. ft.
POWER LOADING	25.5 lbs/HP
MAXIMUM SPEED	85 mph
CRUISING SPEED	70 mph
LANDING SPEED	29 mph
RANGE AT CRUISE	200 miles
SERVICE CEILING	12,000 feet
FUEL CAPACITY	9 gals.
OIL CAPACITY	4 quarts
FUEL CONSUMPTION	3 gal/hr.

POWER: CONTINENTAL A-40-4,
37 HP at 2550 rpm
40 HP at 2575 rpm LIMITED

COLORING NOTES

OVERALL SILVER WITH THREE DARK BLUE OR RED FUSELAGE STRIPES

OPTIONAL-RED, BLUE OR GREEN FUSELAGE, VERTICAL, STRUTS & LANDING GEAR WITH SILVER OR YELLOW WINGS & HORIZONTAL TAIL SURFACES

CUSTOM COLORS AVAILABLE INCLUDING OVERALL METALLIC BRONZE-GOLD WITH RED TRIM

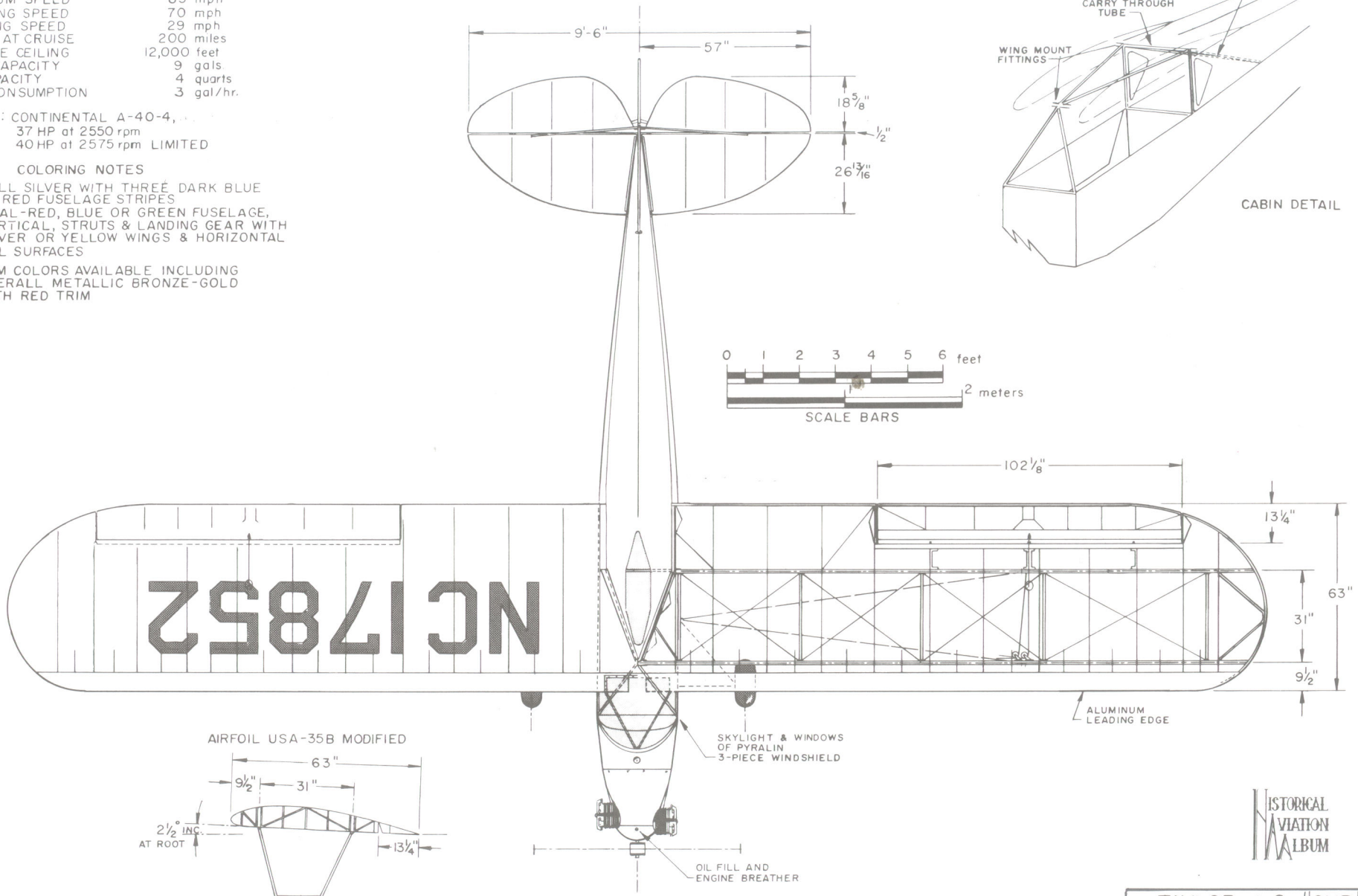

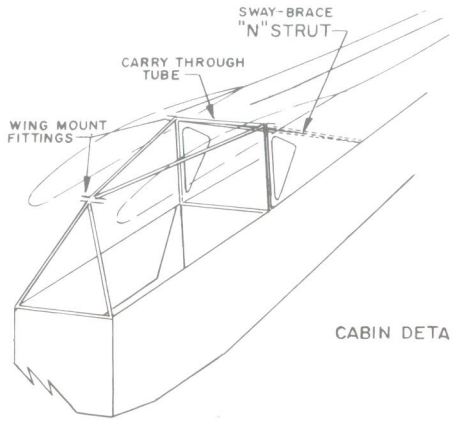

CABIN DETAIL

AIRFOIL USA-35B MODIFIED

CLAMP AROUND LIFT STUTS AT JURY STRUTS

MY SINCERE APPRECIATION TO RICHARD C. "DICK" HILL AND BILL KNEPP FOR THEIR HELP IN THE PREPARATION OF THESE DRAWINGS.

Paul R. Matt

HISTORICAL AVIATION ALBUM

TAYLOR J-2 "CUB"

"THE SILVER CUB" 1937

SCALE: ORIGINAL - 1:24
REPRO. - 1:48

DRAWN BY: PAUL R. MATT

© HISTORICAL AVIATION ALBUM 1986
P.O. BOX 33

35'-2 1/2"

© HISTORICAL AVIATION ALBUM 1986
P.O. BOX 33
TEMPLE CITY, CALIF. 91780

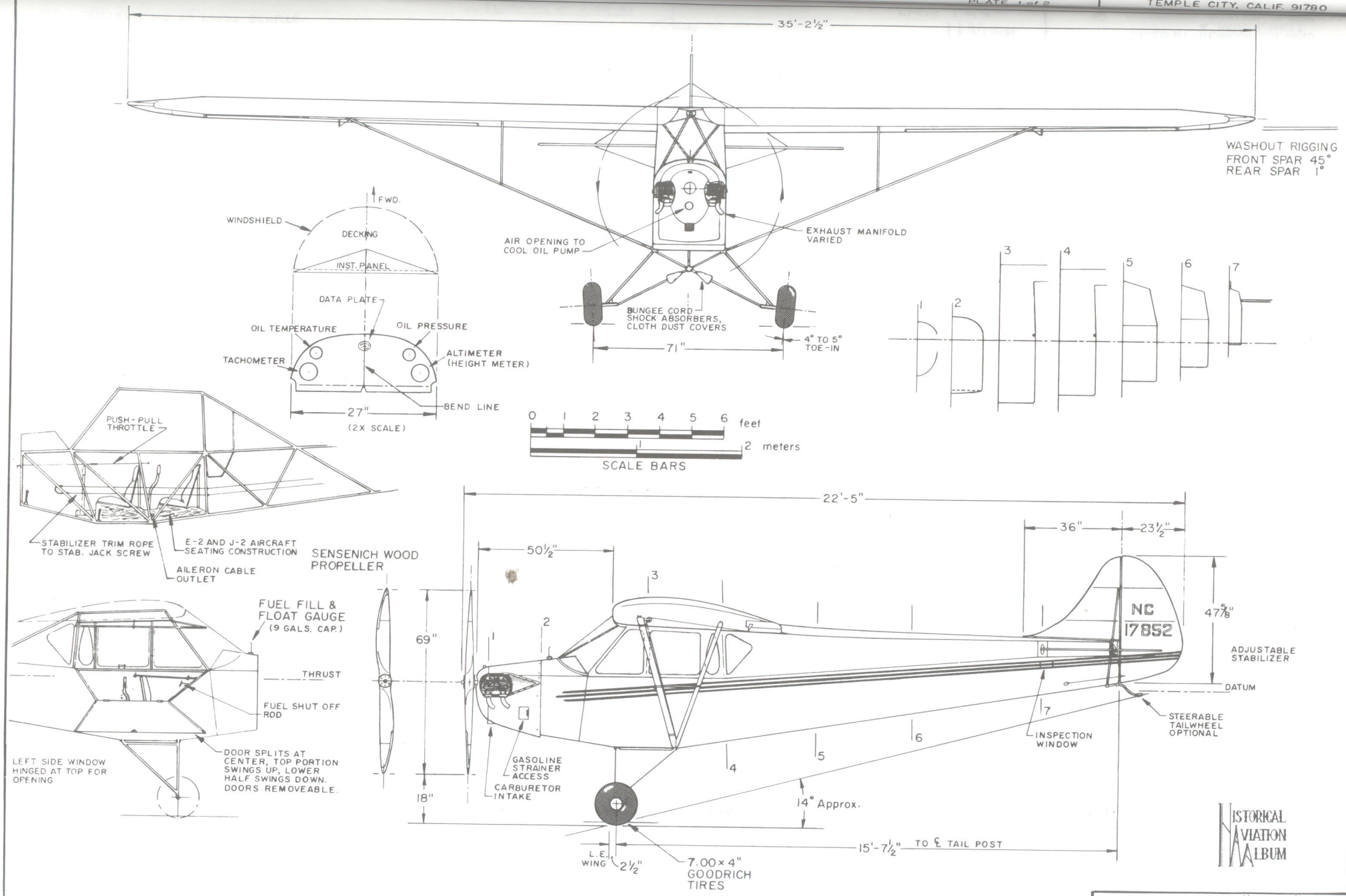

TAYLOR J-2 "CUB"
"THE SILVER CUB" 1937
SCALE: ORIGINAL - 1:24
REPRO. - 1:48
DRAWN BY: PAUL R. MATT

© HISTORICAL AVIATION ALBUM 1986
P.O. BOX 33
TEMPLE CITY, CALIF. 91780

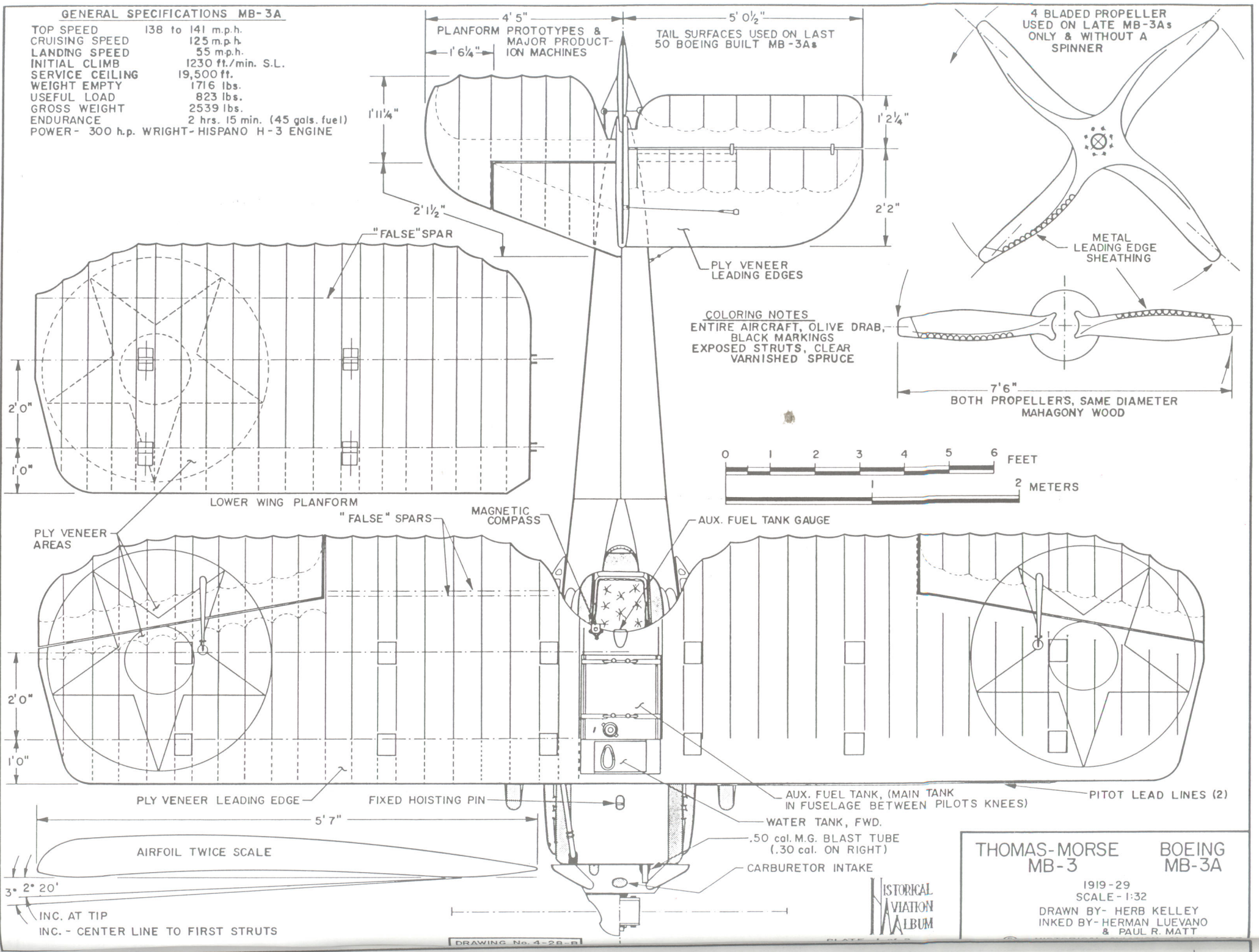
GENERAL SPECIFICATIONS MB-3A
TOP SPEED 138 to 141 m.p.h.
CRUISING SPEED 125 m.p.h.
LANDING SPEED 55 m.p.h.
INITIAL CLIMB 1230 ft./min. S.L.
SERVICE CEILING 19,500 ft.
WEIGHT EMPTY 1716 lbs.
USEFUL LOAD 823 lbs.
GROSS WEIGHT 2539 lbs.
ENDURANCE 2 hrs. 15 min. (45 gals. fuel)
POWER - 300 h.p. WRIGHT-HISPANO H-3 ENGINE
4' 5"
PLANFORM PROTOTYPES & MAJOR PRODUCTION MACHINES
1' 6¼"
5' 0½"
TAIL SURFACES USED ON LAST 50 BOEING BUILT MB-3As
1' 11¼"
1' 2¼"
2' 1½"
2' 2"
PLY VENEER LEADING EDGES
4 BLADED PROPELLER USED ON LATE MB-3As ONLY & WITHOUT A SPINNER
METAL LEADING EDGE SHEATHING
"FALSE" SPAR
COLORING NOTES
ENTIRE AIRCRAFT, OLIVE DRAB, BLACK MARKINGS
EXPOSED STRUTS, CLEAR VARNISHED SPRUCE
7' 6"
BOTH PROPELLERS, SAME DIAMETER MAHAGONY WOOD
2' 0"
1' 0"
LOWER WING PLANFORM
0 1 2 3 4 5 6 FEET
1 2 METERS
PLY VENEER AREAS
"FALSE" SPARS
MAGNETIC COMPASS
AUX. FUEL TANK GAUGE
2' 0"
1' 0"
PLY VENEER LEADING EDGE
FIXED HOISTING PIN
AUX. FUEL TANK, (MAIN TANK IN FUSELAGE BETWEEN PILOTS KNEES)
PITOT LEAD LINES (2)
5' 7"
WATER TANK, FWD.
.50 cal. M.G. BLAST TUBE (.30 cal. ON RIGHT)
AIRFOIL TWICE SCALE
CARBURETOR INTAKE
3° 2° 20'
INC. AT TIP
INC. - CENTER LINE TO FIRST STRUTS
HISTORICAL AVIATION ALBUM
THOMAS-MORSE MB-3
BOEING MB-3A
1919-29
SCALE - 1:32
DRAWN BY- HERB KELLEY
INKED BY- HERMAN LUEVANO & PAUL R. MATT
DRAWING No. 4-28-B
26' 0"

DRAWING No. 4-28-B

PLATE 1 of 2

DRAWN BY- HERB KELLEY
INKED BY- HERMAN LUEVANO
& PAUL R. MATT

© HISTORICAL AVIATION ALBUM 1967

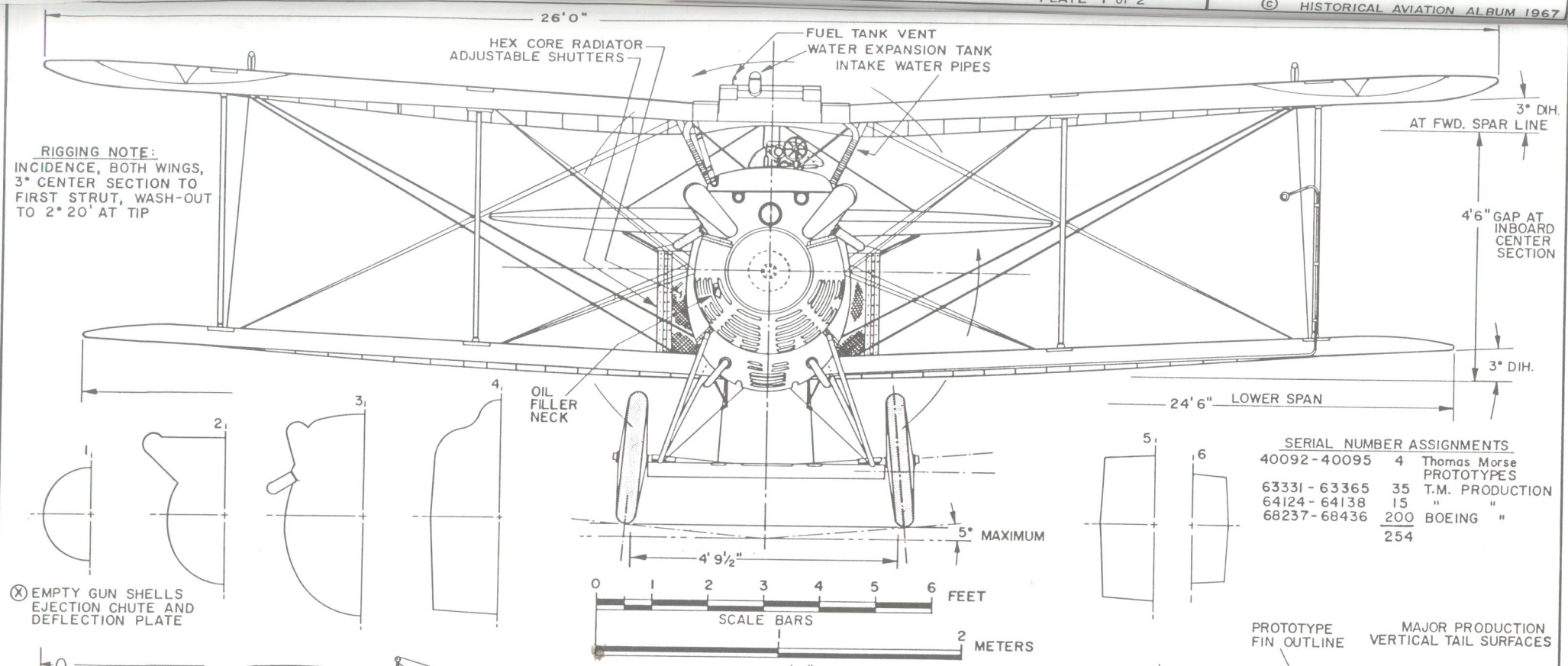

RIGGING NOTE:
INCIDENCE, BOTH WINGS, 3° CENTER SECTION TO FIRST STRUT, WASH-OUT TO 2° 20' AT TIP

SERIAL NUMBER ASSIGNMENTS

40092-40095	4	Thomas Morse PROTOTYPES
63331-63365	35	T.M. PRODUCTION
64124-64138	15	" "
68237-68436	200	BOEING "
	254	

(X) EMPTY GUN SHELLS EJECTION CHUTE AND DEFLECTION PLATE

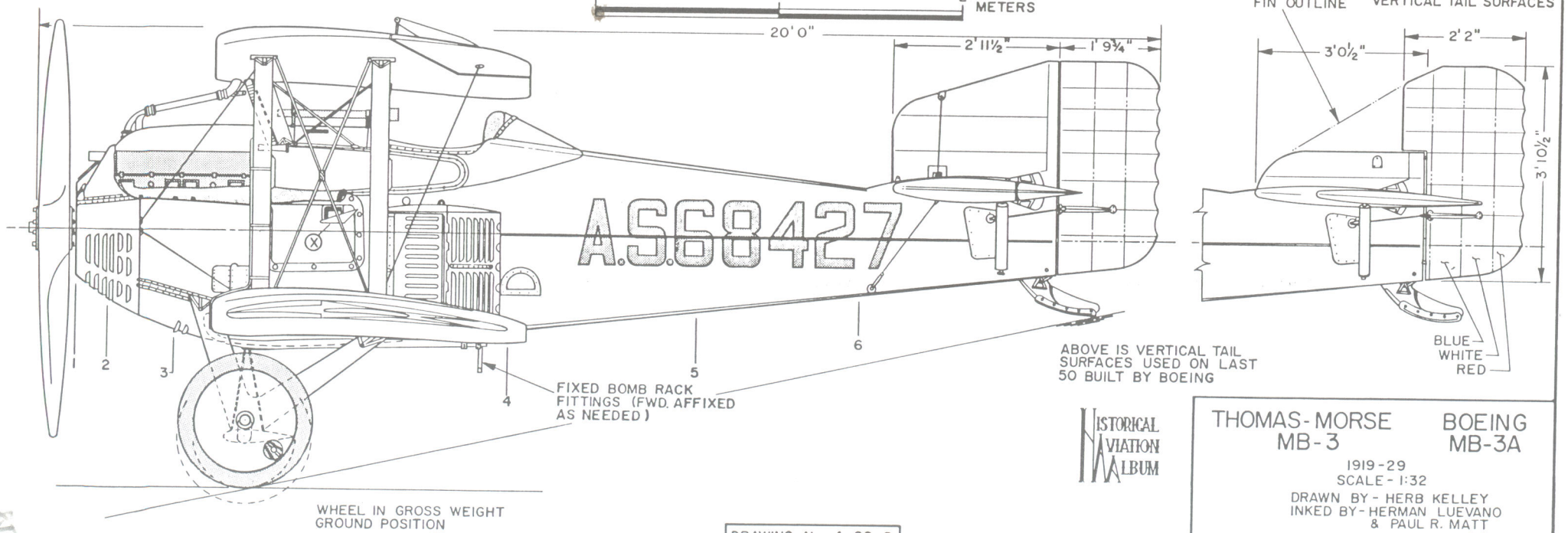

HISTORICAL AVIATION ALBUM

THOMAS-MORSE MB-3 — BOEING MB-3A

1919-29
SCALE - 1:32

DRAWN BY - HERB KELLEY
INKED BY - HERMAN LUEVANO
& PAUL R. MATT

© HISTORICAL AVIATION ALBUM 1967

DRAWING No. 4-28-B

PLATE 2 of 2

GENERAL SPECIFICATIONS

WEIGHT EMPTY	1663 lbs. (Model C-185)
USEFUL LOAD	702 lbs.
GROSS WEIGHT	2365 lbs.
TOP SPEED	118 mph (100 hp Kinner powered)
CRUISING SPEED	92 mph
LANDING SPEED	35 mph
RATE OF CLIMB, INITIAL	640 ft./min. at S.L.
SERVICE CEILING	18,000 feet
CRUISE RANGE	500 miles
WING AREA (incl. ailerons)	236 sq. ft.

COLLEGIATE NC 887E, PORTRAYED, WAS COMPLETED MARCH 12, 1929

POWER - CURTISS R-600 CHALLENGER 6-CYL. RADIAL, 170 hp at 1800 rpm, 185 hp at 2000 rpm

COLORING NOTES

EXACT COLORING OF NC 887E IS NO LONGER REMEMBERED, BUT BELIEVED TO HAVE BEEN SILVER WINGS & TAIL SURFACES, DARK BLUE FUSELAGE AND BLACK DETAILS.

OUR SINCERE APPRECIATION IS EXTENDED TO MR. OTTO TIMM FOR HIS PERSONAL HELP AND INTEREST IN MAKING THESE DRAWINGS POSSIBLE. A SPECIAL THANKS ALSO TO REVEREND BOARDMAN C. REED FOR HIS UNTIRING PERSONAL INTEREST IN THE TIMM COLLEGIATE PROJECT.

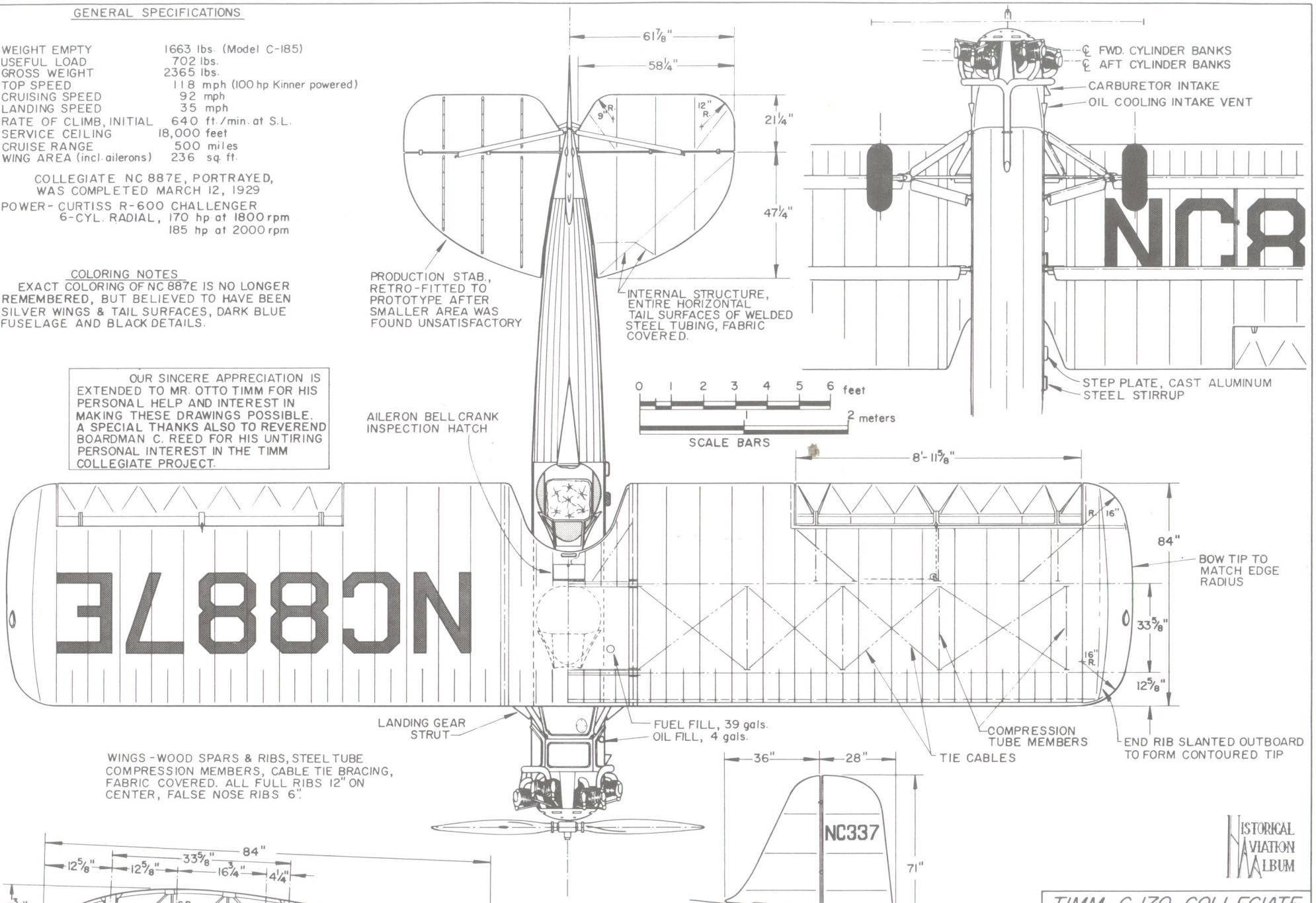

WINGS - WOOD SPARS & RIBS, STEEL TUBE COMPRESSION MEMBERS, CABLE TIE BRACING, FABRIC COVERED. ALL FULL RIBS 12" ON CENTER, FALSE NOSE RIBS 6".

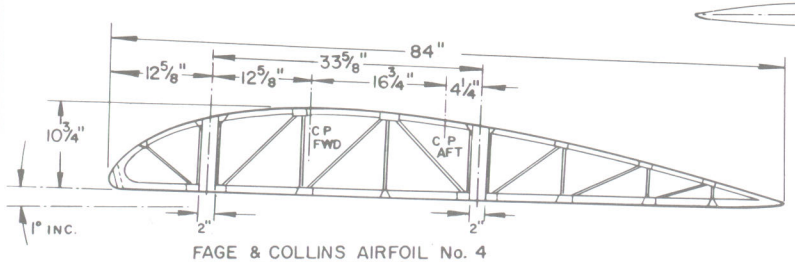

FAGE & COLLINS AIRFOIL No. 4
NACA REPORT 124
(DRAWN TWICE SCALE)

HISTORICAL AVIATION ALBUM

TIMM C-170 COLLEGIATE
1928-31

SCALE - ORIGINAL 1:24
REPRO. 1:48
DRAWN BY - PAUL R. MATT

© HISTORICAL AVIATION ALBUM 1970
P. O. BOX 33
TEMPLE CITY, CALIF. 91780

DRAWING No. 8-72-A

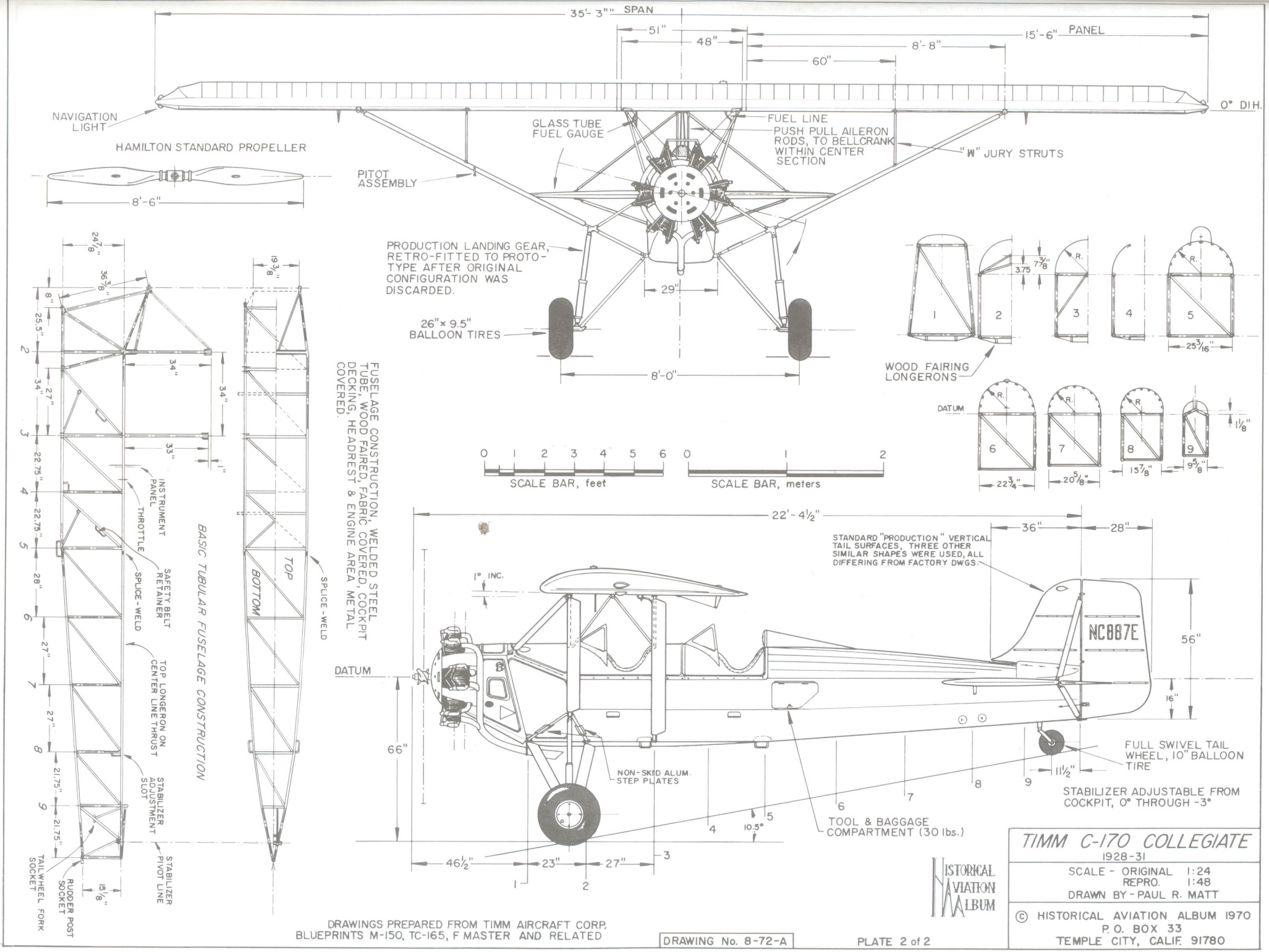

DRAWINGS PREPARED FROM TIMM AIRCRAFT CORP. BLUEPRINTS M-150, TC-165, F MASTER AND RELATED

HISTORICAL AVIATION ALBUM

TIMM C-170 COLLEGIATE

1928-31

SCALE - ORIGINAL 1:24
REPRO. 1:48
DRAWN BY - PAUL R. MATT

© HISTORICAL AVIATION ALBUM 1970
P. O. BOX 33
TEMPLE CITY, CALIF. 91780

GENERAL SPECIFICATIONS
R-3 IN FINAL CONFIGURATION

WEIGHT EMPTY	2032 lbs. WITH WATER
USEFUL LOAD	471 lbs. INCLUDING 271 lbs. OF DISPOSABLE WEIGHT
GROSS WEIGHT	2503 lbs.
MAXIMUM SPEED	219 m.p.h. I.A.S. at 2400 r.p.m. OVER MEASURED TRIANGLE COURSE (T.A.S. 235 mph)
LANDING SPEED	73.2 m.p.h.
STALLING SPEED	78 m.p.h.
FUEL CAPACITY	40 gals.
OIL CAPACITY	4 gals.
WING AREA	146.5 sq. ft.
POWER - CURTISS D-12	500 h.p. at 2200 r.p.m.
	507 h.p. at 2380 r.p.m.
	(NOT HIGH COMPRESSION ENGINE)

CONSTRUCTION NOTES

WINGS - WOOD, PLYWOOD RIBS, TAPERED SPRUCE BOX SPARS, PLYWOOD COVERED
FUSELAGE - WELDED STEEL TUBING, FABRIC COVERED AFT PORTIONS, ALUMINUM COVERED FORWARD
EMPENNAGE - WELDED STEEL TUBING, FABRIC COVERED

COLORING NOTES

ENTIRE AIRCRAFT - SILVER
LETTERING - BLACK
RUDDER STRIPES - RED, WHITE & BLUE, BLUE TO TAILPOST
WING RADIATORS - RUSTIC BRASS

THREE R-3s WERE BUILT, A.S. 22-326, 22-327 AND 22-328 (1922). DESIGNED BY ALFRED V. VERVILLE, CHIEF OF PURSUIT AND RACING PLANE DESIGN PROJECTS, USAS ENGINEERING DIVISION, McCOOK FIELD, DAYTON, OHIO BY DIRECTION OF BRIG. GEN. WILLIAM MITCHELL, ASST. CHIEF U.S. ARMY AIR SERVICE. LAWRENCE SPERRY AIRCRAFT CO., FARMINGDALE, LONG ISLAND WAS AWARDED THE CONTRACT TO CONSTRUCT THE AIRCRAFT. FINAL MODIFICATION OF R-3 A.S. 22-328 WAS MADE IN 1923 AND IT'S ULTIMATE DESIGN FEATURES BECAME P-362 IN 1924 AND IS PORTRAYED ON THESE DRAWINGS.

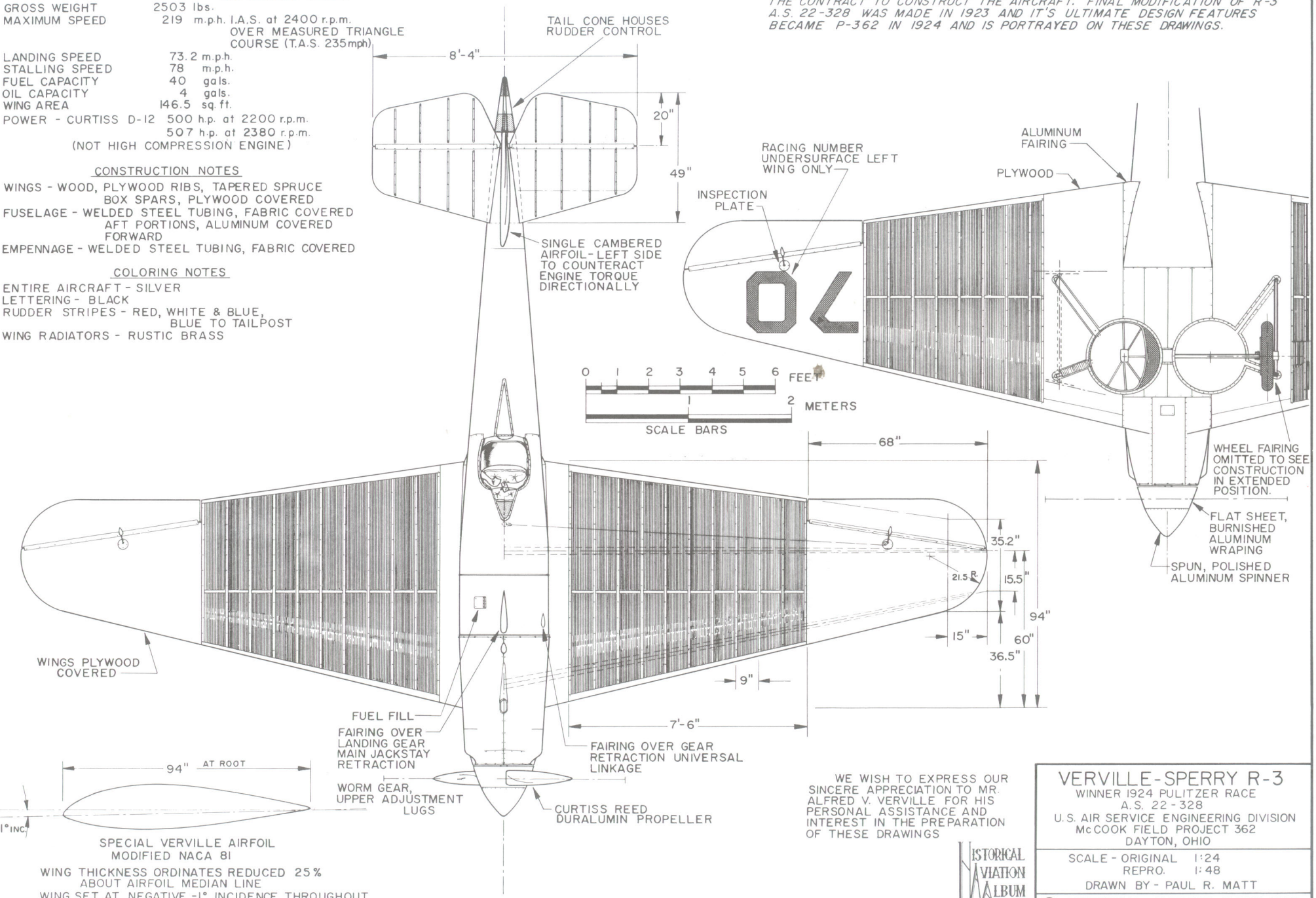

SPECIAL VERVILLE AIRFOIL MODIFIED NACA 81

WING THICKNESS ORDINATES REDUCED 25% ABOUT AIRFOIL MEDIAN LINE
WING SET AT NEGATIVE -1° INCIDENCE THROUGHOUT

WE WISH TO EXPRESS OUR SINCERE APPRECIATION TO MR. ALFRED V. VERVILLE FOR HIS PERSONAL ASSISTANCE AND INTEREST IN THE PREPARATION OF THESE DRAWINGS

HISTORICAL AVIATION ALBUM

VERVILLE-SPERRY R-3

WINNER 1924 PULITZER RACE
A.S. 22-328
U.S. AIR SERVICE ENGINEERING DIVISION
McCOOK FIELD PROJECT 362
DAYTON, OHIO

SCALE - ORIGINAL 1:24
REPRO. 1:48
DRAWN BY - PAUL R. MATT

© HISTORICAL AVIATION ALBUM 1969
P.O. BOX 33
TEMPLE CITY, CALIF. 91780

DRAWING No. 6-58-A

GENERAL SPECIFICATIONS
R-3 IN FINAL CONFIGURATION

WEIGHT EMPTY	2032 lbs. WITH WATER
USEFUL LOAD	471 lbs. INCLUDING 271 lbs. OF DISPOSABLE WEIGHT
GROSS WEIGHT	2503 lbs.
MAXIMUM SPEED	219 m.p.h. I.A.S. at 2400 r.p.m. OVER MEASURED TRIANGLE COURSE (T.A.S. 235 mph)
LANDING SPEED	73.2 m.p.h.
STALLING SPEED	78 m.p.h.
FUEL CAPACITY	40 gals.
OIL CAPACITY	4 gals.
WING AREA	146.5 sq. ft.
POWER - CURTISS D-12	500 h.p. at 2200 r.p.m.
	507 h.p. at 2380 r.p.m.
	(NOT HIGH COMPRESSION ENGINE)

CONSTRUCTION NOTES

WINGS - WOOD, PLYWOOD RIBS, TAPERED SPRUCE BOX SPARS, PLYWOOD COVERED
FUSELAGE - WELDED STEEL TUBING, FABRIC COVERED AFT PORTIONS, ALUMINUM COVERED FORWARD
EMPENNAGE - WELDED STEEL TUBING, FABRIC COVERED

COLORING NOTES

ENTIRE AIRCRAFT - SILVER
LETTERING - BLACK
RUDDER STRIPES - RED, WHITE & BLUE, BLUE TO TAILPOST
WING RADIATORS - RUSTIC BRASS

THREE R-3s WERE BUILT, A.S. 22-326, 22-327 AND 22-328 (1922). DESIGNED BY ALFRED V. VERVILLE, CHIEF OF PURSUIT AND RACING PLANE DESIGN PROJECTS, USAS ENGINEERING DIVISION, McCOOK FIELD, DAYTON, OHIO BY DIRECTION OF BRIG. GEN. WILLIAM MITCHELL, ASST. CHIEF U.S. ARMY AIR SERVICE. LAWRENCE SPERRY AIRCRAFT CO., FARMINGDALE, LONG ISLAND WAS AWARDED THE CONTRACT TO CONSTRUCT THE AIRCRAFT. FINAL MODIFICATION OF R-3 A.S. 22-328 WAS MADE IN 1923 AND IT'S ULTIMATE DESIGN FEATURES BECAME P-362 IN 1924 AND IS PORTRAYED ON THESE DRAWINGS.

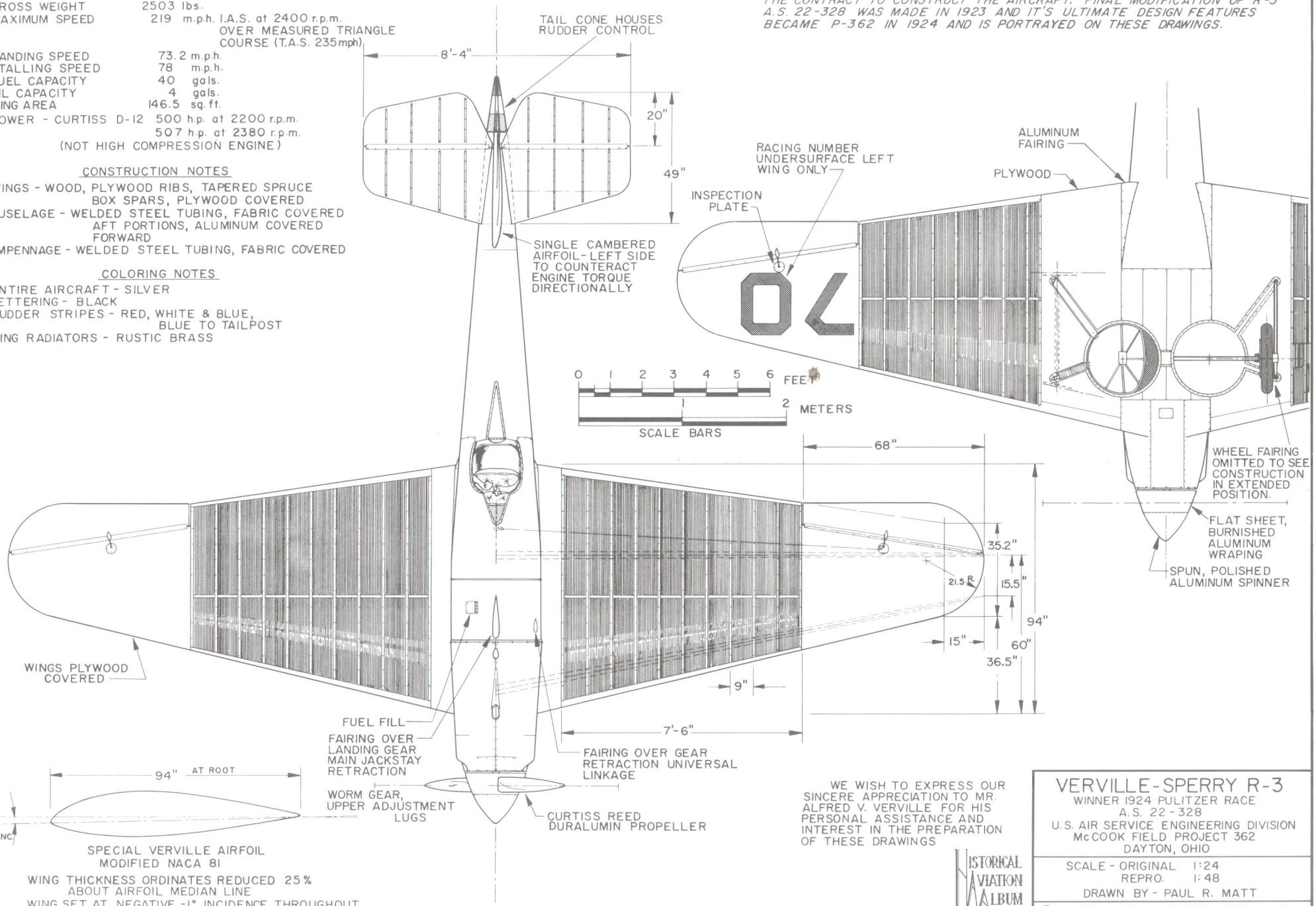

SPECIAL VERVILLE AIRFOIL MODIFIED NACA 81

WING THICKNESS ORDINATES REDUCED 25% ABOUT AIRFOIL MEDIAN LINE
WING SET AT NEGATIVE -1° INCIDENCE THROUGHOUT

WE WISH TO EXPRESS OUR SINCERE APPRECIATION TO MR. ALFRED V. VERVILLE FOR HIS PERSONAL ASSISTANCE AND INTEREST IN THE PREPARATION OF THESE DRAWINGS

HISTORICAL AVIATION ALBUM

VERVILLE-SPERRY R-3

WINNER 1924 PULITZER RACE
A.S. 22-328
U.S. AIR SERVICE ENGINEERING DIVISION
McCOOK FIELD PROJECT 362
DAYTON, OHIO

SCALE - ORIGINAL 1:24
REPRO. 1:48
DRAWN BY - PAUL R. MATT

© HISTORICAL AVIATION ALBUM 1969
P.O. BOX 33
TEMPLE CITY, CALIF. 91780

DRAWING No. 6-58-A

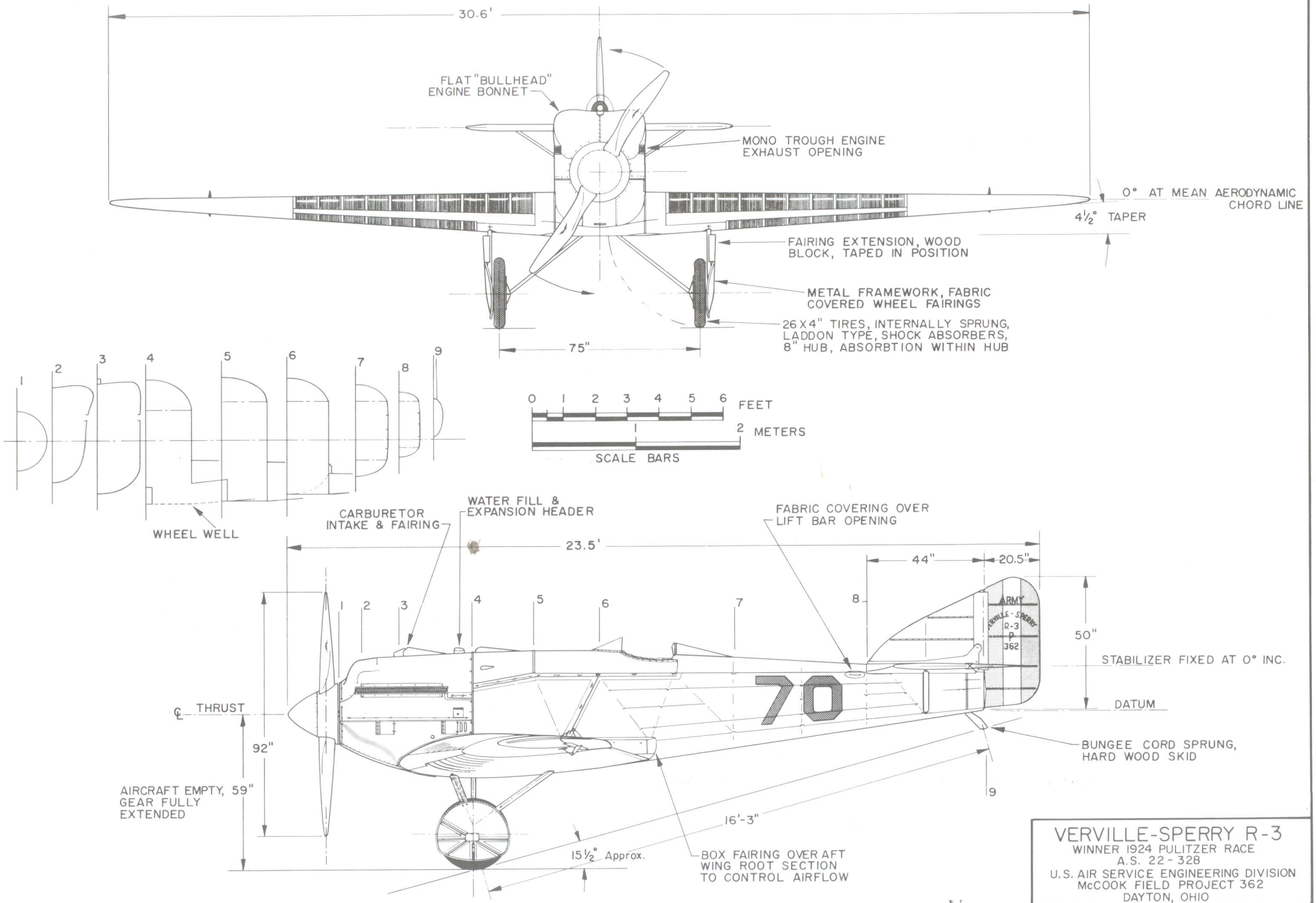

VERVILLE-SPERRY R-3

WINNER 1924 PULITZER RACE
A.S. 22-328
U.S. AIR SERVICE ENGINEERING DIVISION
McCOOK FIELD PROJECT 362
DAYTON, OHIO

SCALE - ORIGINAL 1:24
REPRO. 1:48
DRAWN BY - PAUL R. MATT

© HISTORICAL AVIATION ALBUM 1969
P.O. BOX 33
TEMPLE CITY, CALIF. 91780

HISTORICAL AVIATION ALBUM

DRAWING No. 6-58-A

PLATE 2 of 2

Vought F4U-1
"Corsair"

F4U-1D "Corsair", June 6, 1944.

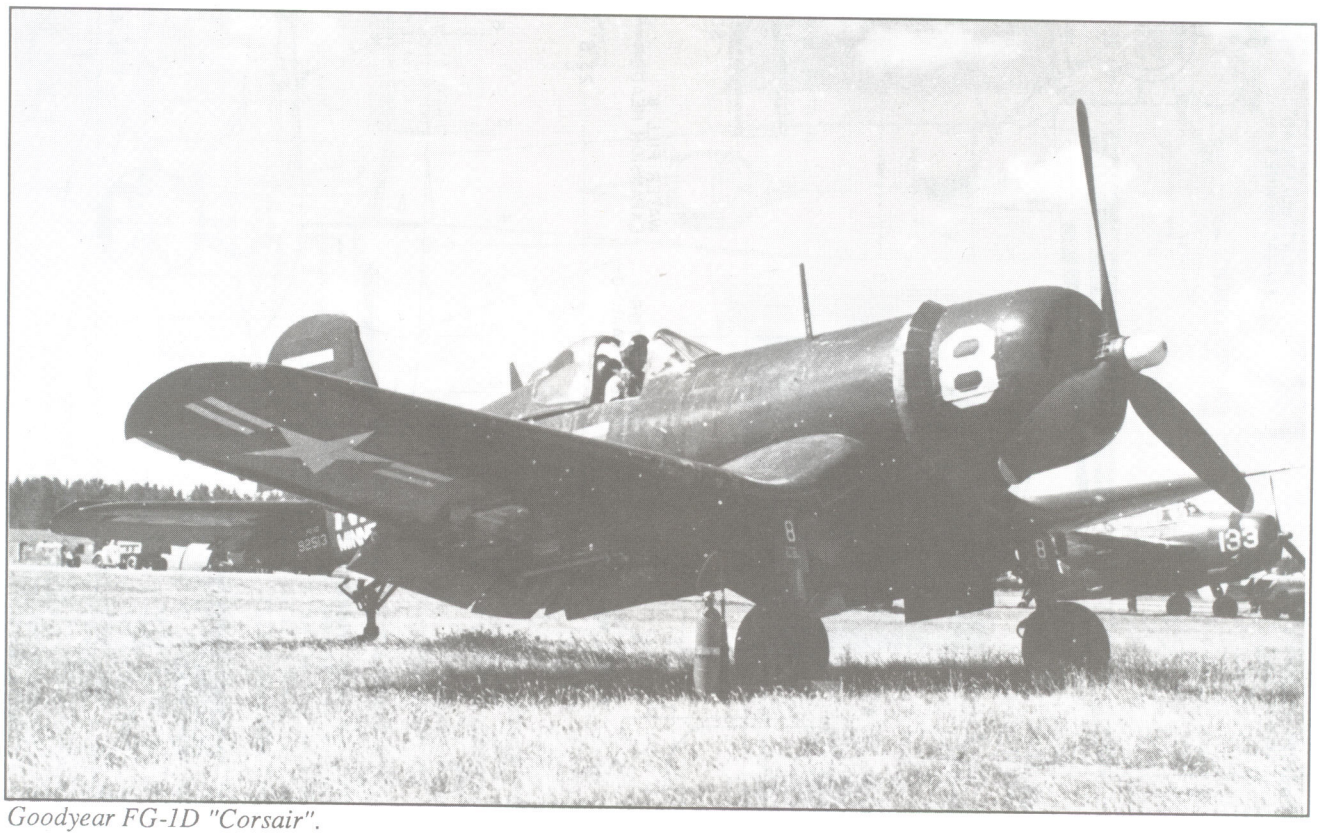

Goodyear FG-1D "Corsair".

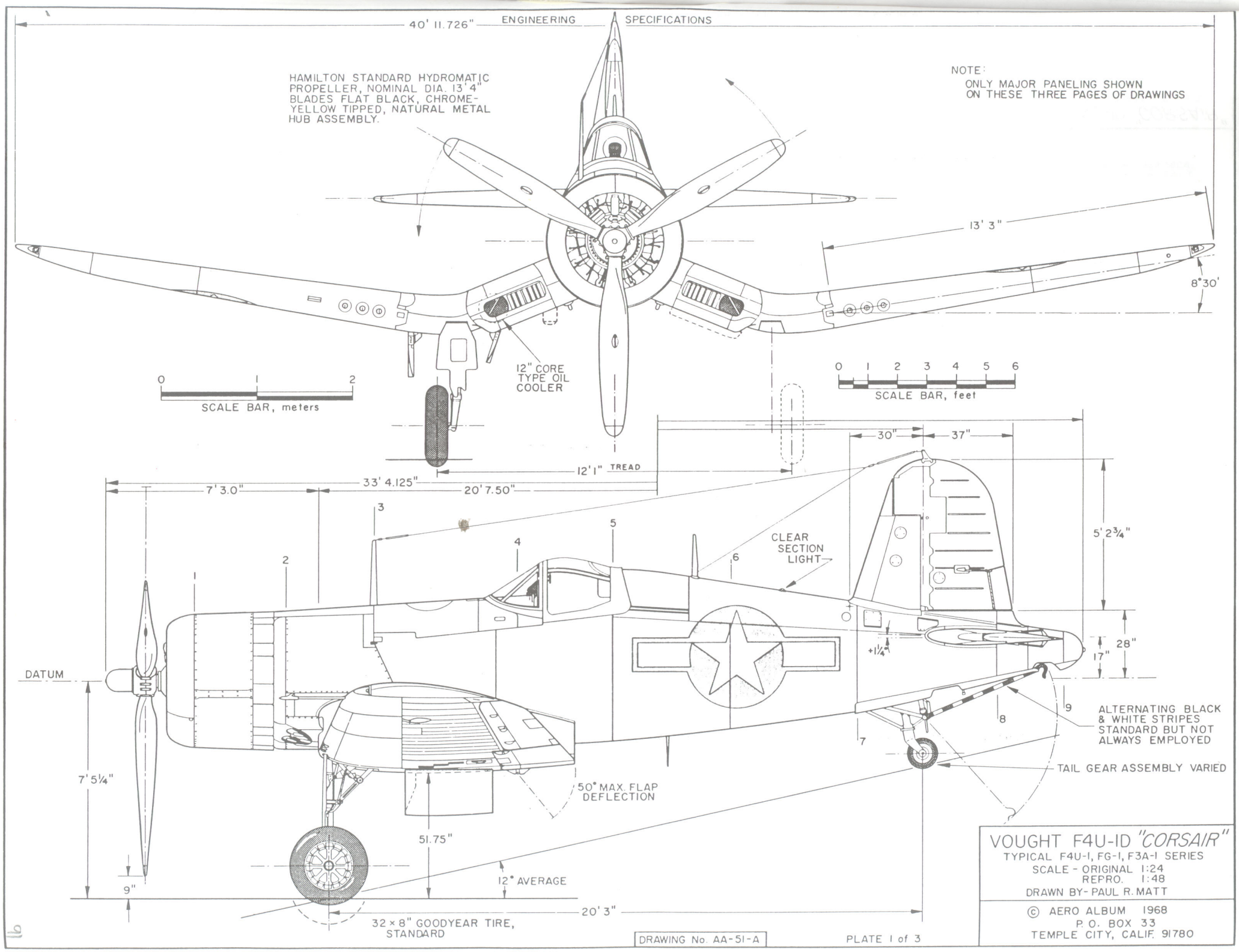
ENGINEERING SPECIFICATIONS
40' 11.726"
HAMILTON STANDARD HYDROMATIC PROPELLER, NOMINAL DIA. 13' 4" BLADES FLAT BLACK, CHROME-YELLOW TIPPED, NATURAL METAL HUB ASSEMBLY.
NOTE:
ONLY MAJOR PANELING SHOWN ON THESE THREE PAGES OF DRAWINGS
13' 3"
8°30'
12" CORE TYPE OIL COOLER
0 1 2
SCALE BAR, meters
0 1 2 3 4 5 6
SCALE BAR, feet
30"
37"
12' 1" TREAD
33' 4.125"
7' 3.0"
20' 7.50"
5' 2¾"
CLEAR SECTION LIGHT
+1¼°
28"
17"
DATUM
7' 5¼"
9"
51.75"
50° MAX. FLAP DEFLECTION
12° AVERAGE
20' 3"
32 × 8" GOODYEAR TIRE, STANDARD
ALTERNATING BLACK & WHITE STRIPES STANDARD BUT NOT ALWAYS EMPLOYED
TAIL GEAR ASSEMBLY VARIED
1
2
3
4
5
6
7
8
9
VOUGHT F4U-1D "CORSAIR"
TYPICAL F4U-1, FG-1, F3A-1 SERIES
SCALE - ORIGINAL 1:24
REPRO. 1:48
DRAWN BY - PAUL R. MATT
© AERO ALBUM 1968
P. O. BOX 33
TEMPLE CITY, CALIF. 91780
DRAWING No. AA-51-A
PLATE 1 of 3

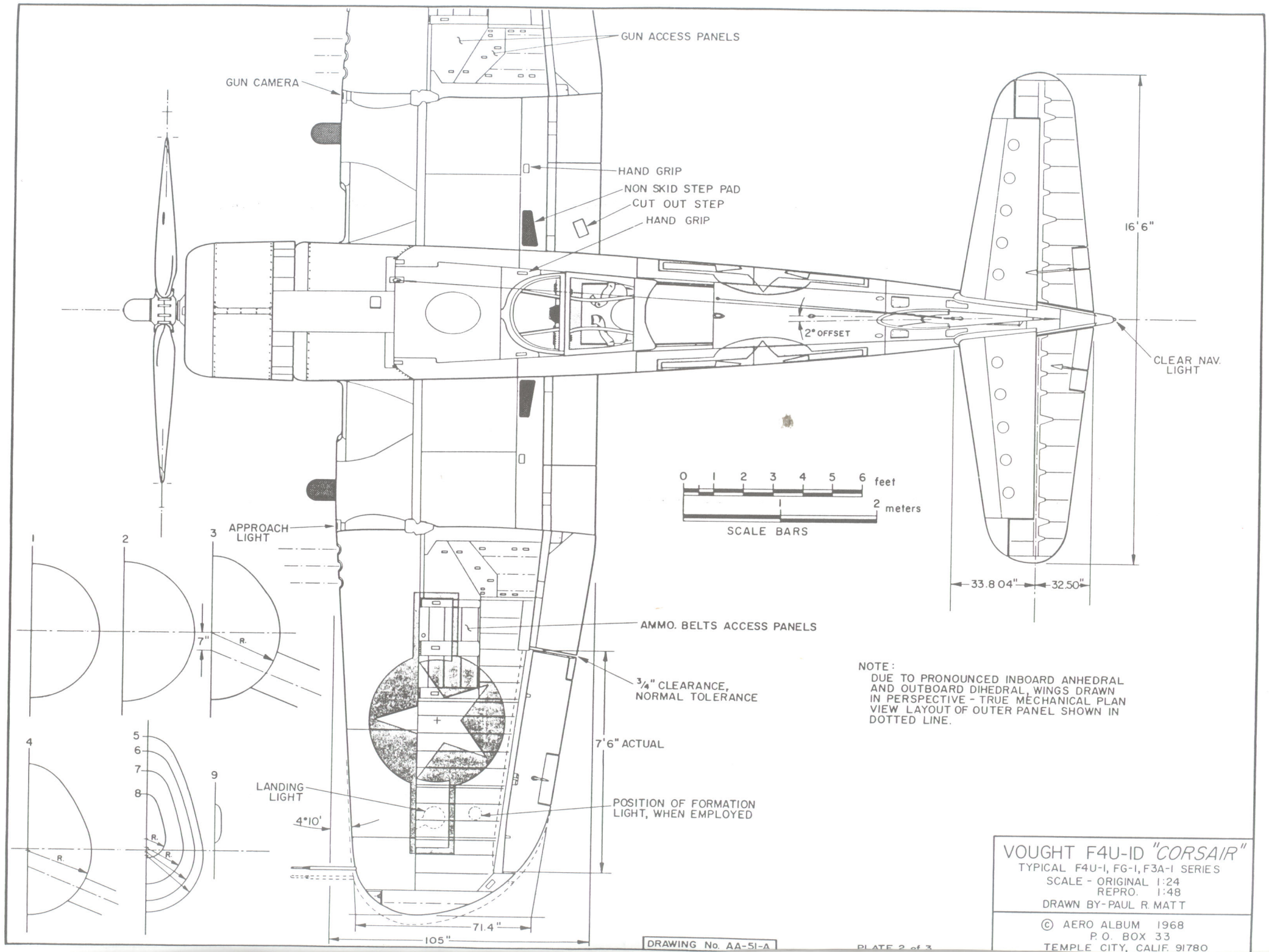
GUN ACCESS PANELS
GUN CAMERA
HAND GRIP
NON SKID STEP PAD
CUT OUT STEP
HAND GRIP
16'6"
2° OFFSET
CLEAR NAV. LIGHT
0 1 2 3 4 5 6 feet
1 2 meters
SCALE BARS
33.804"
32.50"
APPROACH LIGHT
1
2
3
7"
R.
AMMO. BELTS ACCESS PANELS
3/4" CLEARANCE, NORMAL TOLERANCE
4
5
6
7
8
9
R.
R.
R.
7'6" ACTUAL
LANDING LIGHT
POSITION OF FORMATION LIGHT, WHEN EMPLOYED
4°10'
71.4"
105"
NOTE:
DUE TO PRONOUNCED INBOARD ANHEDRAL AND OUTBOARD DIHEDRAL, WINGS DRAWN IN PERSPECTIVE - TRUE MECHANICAL PLAN VIEW LAYOUT OF OUTER PANEL SHOWN IN DOTTED LINE.
VOUGHT F4U-ID "CORSAIR"
TYPICAL F4U-1, FG-1, F3A-1 SERIES
SCALE - ORIGINAL 1:24
REPRO. 1:48
DRAWN BY-PAUL R. MATT
© AERO ALBUM 1968
P.O. BOX 33
TEMPLE CITY, CALIF. 91780
DRAWING No. AA-51-A
PLATE 2 of 3

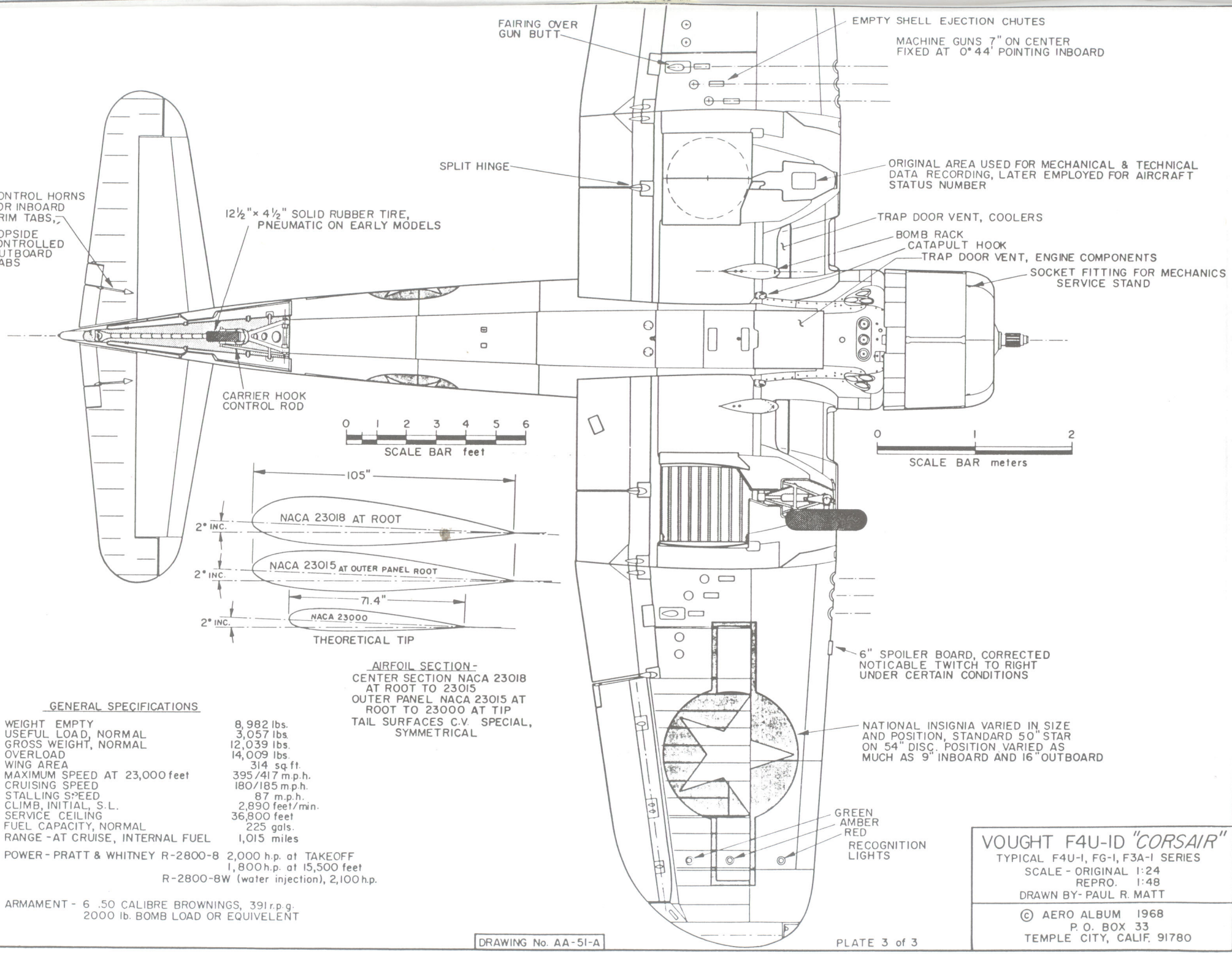
FAIRING OVER GUN BUTT
EMPTY SHELL EJECTION CHUTES
MACHINE GUNS 7" ON CENTER FIXED AT 0° 44' POINTING INBOARD
SPLIT HINGE
ORIGINAL AREA USED FOR MECHANICAL & TECHNICAL DATA RECORDING, LATER EMPLOYED FOR AIRCRAFT STATUS NUMBER
CONTROL HORNS FOR INBOARD TRIM TABS,
TOPSIDE CONTROLLED OUTBOARD TABS
12½" × 4½" SOLID RUBBER TIRE, PNEUMATIC ON EARLY MODELS
TRAP DOOR VENT, COOLERS
BOMB RACK
CATAPULT HOOK
TRAP DOOR VENT, ENGINE COMPONENTS
SOCKET FITTING FOR MECHANICS SERVICE STAND
CARRIER HOOK CONTROL ROD
0 1 2 3 4 5 6
SCALE BAR feet
0 1 2
SCALE BAR meters
105"
NACA 23018 AT ROOT
2° INC.
NACA 23015 AT OUTER PANEL ROOT
2° INC.
71.4"
NACA 23000
2° INC.
THEORETICAL TIP
AIRFOIL SECTION-
CENTER SECTION NACA 23018 AT ROOT TO 23015
OUTER PANEL NACA 23015 AT ROOT TO 23000 AT TIP
TAIL SURFACES C.V. SPECIAL, SYMMETRICAL
6" SPOILER BOARD, CORRECTED NOTICABLE TWITCH TO RIGHT UNDER CERTAIN CONDITIONS
NATIONAL INSIGNIA VARIED IN SIZE AND POSITION, STANDARD 50" STAR ON 54" DISC. POSITION VARIED AS MUCH AS 9" INBOARD AND 16" OUTBOARD
GREEN
AMBER
RED
RECOGNITION LIGHTS
GENERAL SPECIFICATIONS
WEIGHT EMPTY 8,982 lbs.
USEFUL LOAD, NORMAL 3,057 lbs.
GROSS WEIGHT, NORMAL 12,039 lbs.
OVERLOAD 14,009 lbs.
WING AREA 314 sq. ft.
MAXIMUM SPEED AT 23,000 feet 395/417 m.p.h.
CRUISING SPEED 180/185 m.p.h.
STALLING SPEED 87 m.p.h.
CLIMB, INITIAL, S.L. 2,890 feet/min.
SERVICE CEILING 36,800 feet
FUEL CAPACITY, NORMAL 225 gals.
RANGE - AT CRUISE, INTERNAL FUEL 1,015 miles
POWER - PRATT & WHITNEY R-2800-8 2,000 h.p. at TAKEOFF
1,800 h.p. at 15,500 feet
R-2800-8W (water injection), 2,100 h.p.
ARMAMENT - 6 .50 CALIBRE BROWNINGS, 391 r.p.g.
2000 lb. BOMB LOAD OR EQUIVELENT
DRAWING No. AA-51-A
PLATE 3 of 3
VOUGHT F4U-1D "CORSAIR"
TYPICAL F4U-1, FG-1, F3A-1 SERIES
SCALE - ORIGINAL 1:24
REPRO. 1:48
DRAWN BY- PAUL R. MATT
© AERO ALBUM 1968
P. O. BOX 33
TEMPLE CITY, CALIF. 91780

GENERAL SPECIFICATIONS

WEIGHT EMPTY	3600 lbs.
USEFUL LOAD	1920 "
GROSS WEIGHT	5520 "
MAXIMUM SPEED (EMPTY)	200 mph
MAXIMUM SPEED (MILITARY LOAD)	165 mph
CRUISING SPEED (EMPTY)	169 mph
CRUISING SPEED (MILITARY LOAD)	130 mph
	¼ THROTTLE, FORMATION FLIGHT
LANDING SPEED (CARRIER, FULL FLAPS)	65/75 knts.
SERVICE CEILING	23,700 ft.
ENDURANCE AT CRUISE	5.5 hrs. - 750 nautical mi.
NORMAL SCOUTING MISSION	3 hrs. ENDURANCE
RED LINE DIVE SPEED (FULL LOAD, FULL FLAPS, PROP. IN HIGH PITCH)	- 200 knts.
CAPABLE OF 275 knots IN DIVE BUT NOT NORMAL PROCEDURE	
ENGINE, PRATT & WHITNEY R-1535-80, 600 H.P. (700 H.P. MAX. MILITARY POWER)	

SBU-2 WAS BASICALLY SAME AS -1 MODEL, INCORPORATED REFINEMENTS AND IMPROVED R-1535-98 ENGINE OF APPROXIMATELY SAME POWER RATING.

BU. NO. ASSIGNMENT	No. BUILT
XSBU-1	9222 - 1
SBU-1	9750-9833 - 84
SBU-2	0802-0841 - 40

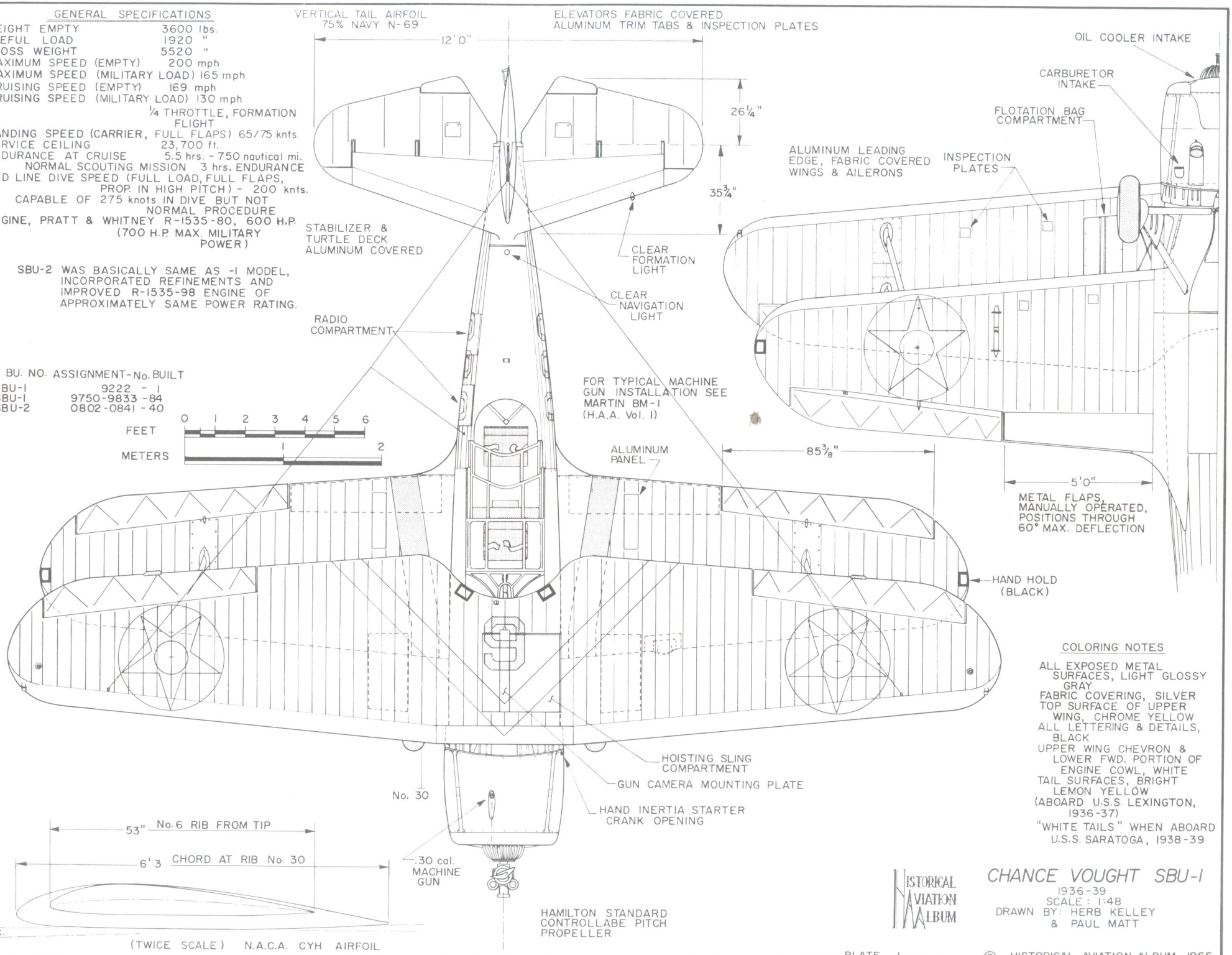

COLORING NOTES

ALL EXPOSED METAL SURFACES, LIGHT GLOSSY GRAY
FABRIC COVERING, SILVER
TOP SURFACE OF UPPER WING, CHROME YELLOW
ALL LETTERING & DETAILS, BLACK
UPPER WING CHEVRON & LOWER FWD. PORTION OF ENGINE COWL, WHITE
TAIL SURFACES, BRIGHT LEMON YELLOW (ABOARD U.S.S. LEXINGTON, 1936-37)
"WHITE TAILS" WHEN ABOARD U.S.S. SARATOGA, 1938-39

HISTORICAL AVIATION ALBUM

CHANCE VOUGHT SBU-1

1936-39
SCALE: 1:48
DRAWN BY: HERB KELLEY & PAUL MATT

© HISTORICAL AVIATION ALBUM 1966

33' 3"

5' 6½"

(A)

CLEAR FORMATION LIGHT

0° DIH. AT 30% CHORD

1° UNDER SURFACE TAPER

5' 6⅞" GAP

11' 11½"

10' 3"

TIE DOWN RING

NOTE: BOMB CAPACITY LIMITED TO EITHER WING STORES OR ℄ 500 lbs.

200 lbs. G.P. BOMB (500 lbs. G.P. BOMB ON ℄)

FEET 0 1 2 3 4 5 6

0 1 2 METERS

12"

31' 1¾"

6' 1"

(A) BOTH WING PANELS OF SAME PHYSICAL LENGTH & OUTLINE

27' 9⅜"

RED
YELLOW
BLUE

2° INC.

2°

10' 0"

METAL FIN

FABRIC COVERED RUDDER

75⅝"

METAL TRIM TAB

9756

SBU-1

3-S-6

U.S. NAVY

SOLID RUBBER TIRE 6 x 2.5"

HORIZONTAL STABILIZER FIXED AT +5° INCIDENCE AIRFOIL NAVY N-69

46"

T.E. AT FUSELAGE STA. 7

30°

10"

FLAT BLACK

27" DIA. "STREAMLINE" TIRE

5°

5°

INSIGNIA COLORS VS-3B
INDIAN HEAD, BLACK SILHOUTTE DETAILED IN RED
OUTER CIRCLE, BLACK
INNER DISC, RED
TEETH & HAIR CLASPS, WHITE

NOTE: PORT SIDE BAGGAGE COMPARTMENT SUFFICIENT FOR OVERNIGHT SUITCASE AND 4 FIFTHS OF SCOTCH

HISTORICAL AVIATION ALBUM

CHANCE VOUGHT SBU-1

1936-39
SCALE: 1:48
DRAWN BY: HERB KELLEY & PAUL MATT

PLATE 2

© HISTORICAL AVIATION ALBUM 1966

Vought XF5U-1

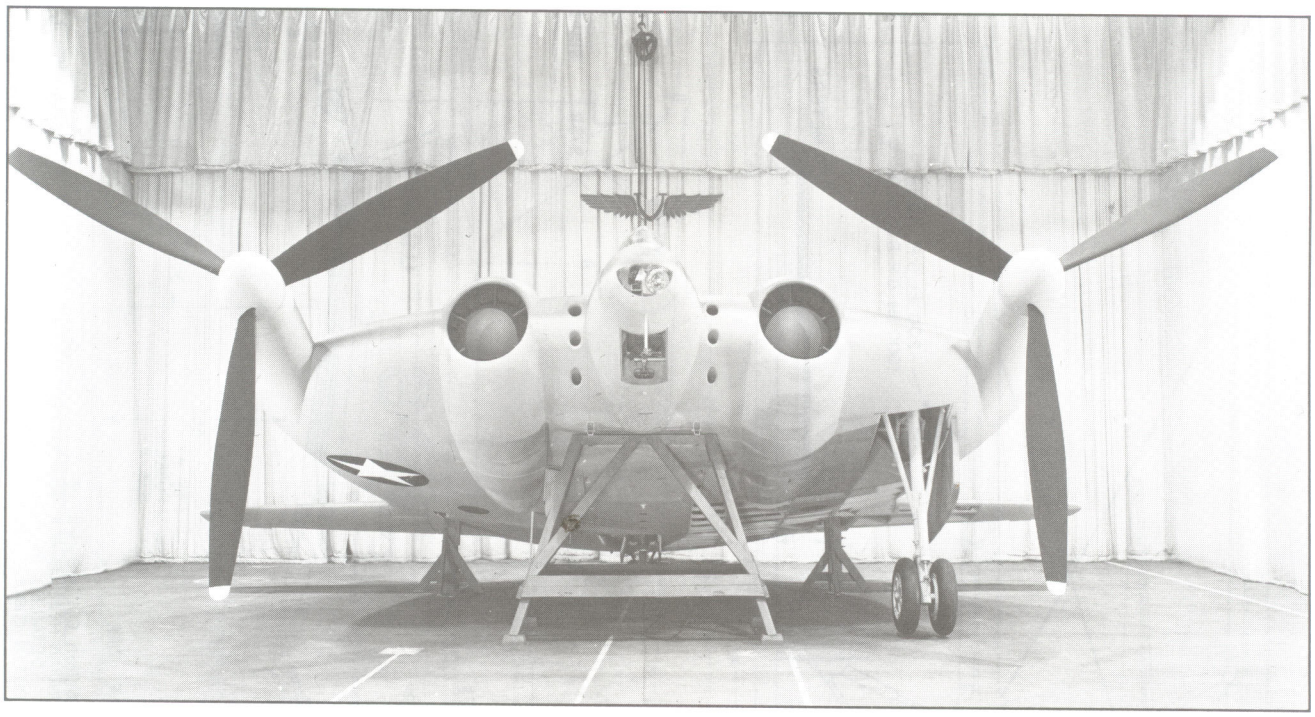

Vought XF5U-1, mock up completed.

Vought XF5U-1 airplane under ground run conditions, August 21, 1947.

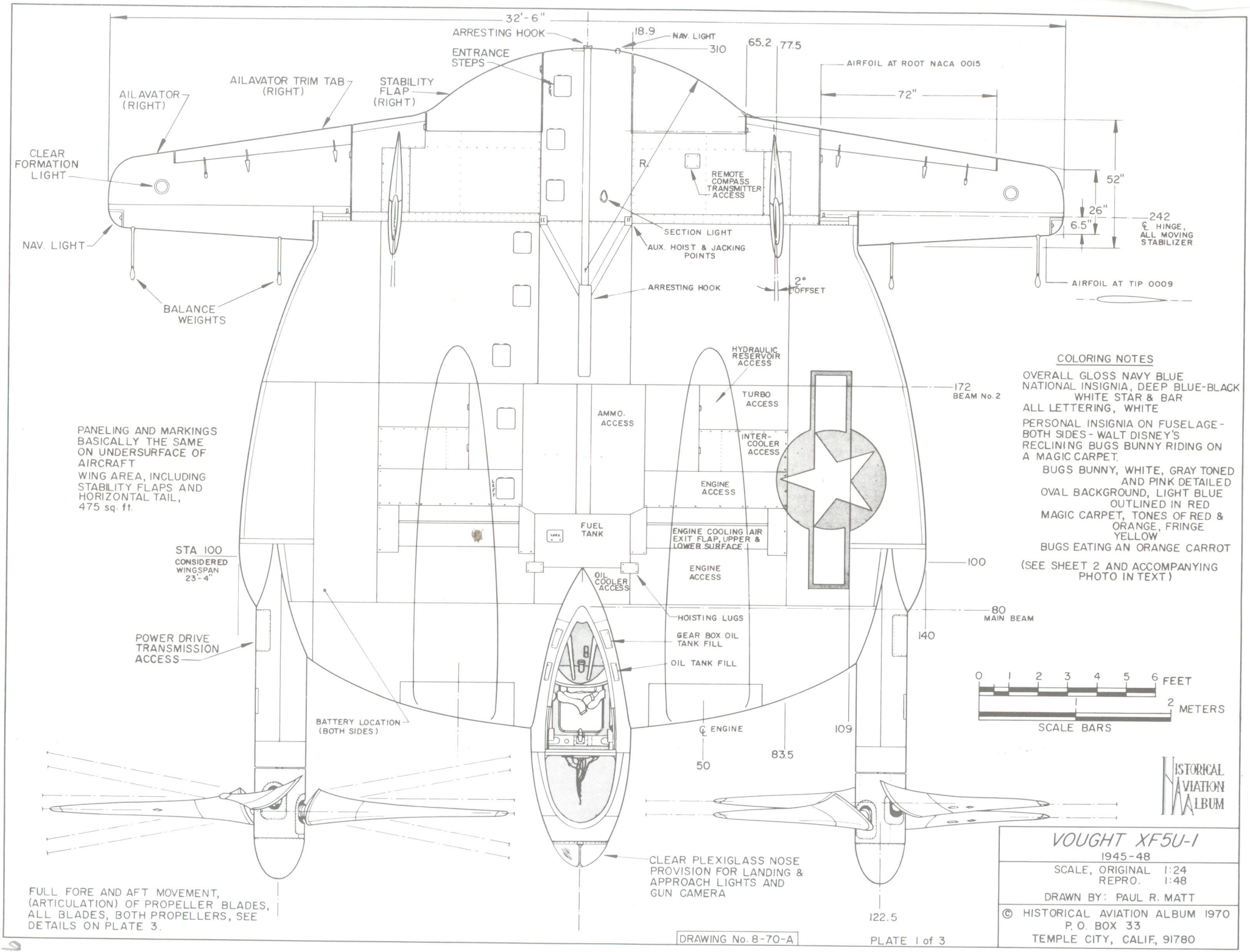
32'-6"
ARRESTING HOOK
18.9
NAV. LIGHT
310
65.2
77.5
ENTRANCE STEPS
AIRFOIL AT ROOT NACA 0015
72"
AILAVATOR (RIGHT)
AILAVATOR TRIM TAB (RIGHT)
STABILITY FLAP (RIGHT)
CLEAR FORMATION LIGHT
R
REMOTE COMPASS TRANSMITTER ACCESS
52"
26"
6.5"
242
℄ HINGE, ALL MOVING STABILIZER
SECTION LIGHT
AUX. HOIST & JACKING POINTS
NAV. LIGHT
ARRESTING HOOK
2° OFFSET
AIRFOIL AT TIP 0009
BALANCE WEIGHTS
HYDRAULIC RESERVOIR ACCESS
172
BEAM No. 2
TURBO ACCESS
AMMO. ACCESS
INTER-COOLER ACCESS
ENGINE ACCESS
FUEL TANK
ENGINE COOLING AIR EXIT FLAP, UPPER & LOWER SURFACE
ENGINE ACCESS
OIL COOLER ACCESS
100
80
MAIN BEAM
HOISTING LUGS
GEAR BOX OIL TANK FILL
OIL TANK FILL
140
POWER DRIVE TRANSMISSION ACCESS
BATTERY LOCATION (BOTH SIDES)
℄ ENGINE
109
83.5
50
122.5
CLEAR PLEXIGLASS NOSE PROVISION FOR LANDING & APPROACH LIGHTS AND GUN CAMERA
FULL FORE AND AFT MOVEMENT, (ARTICULATION) OF PROPELLER BLADES, ALL BLADES, BOTH PROPELLERS, SEE DETAILS ON PLATE 3.
PANELING AND MARKINGS BASICALLY THE SAME ON UNDERSURFACE OF AIRCRAFT
WING AREA, INCLUDING STABILITY FLAPS AND HORIZONTAL TAIL, 475 sq. ft.
STA 100 CONSIDERED WINGSPAN 23'-4"
COLORING NOTES
OVERALL GLOSS NAVY BLUE
NATIONAL INSIGNIA, DEEP BLUE-BLACK WHITE STAR & BAR
ALL LETTERING, WHITE
PERSONAL INSIGNIA ON FUSELAGE - BOTH SIDES - WALT DISNEY'S RECLINING BUGS BUNNY RIDING ON A MAGIC CARPET.
BUGS BUNNY, WHITE, GRAY TONED AND PINK DETAILED
OVAL BACKGROUND, LIGHT BLUE OUTLINED IN RED
MAGIC CARPET, TONES OF RED & ORANGE, FRINGE YELLOW
BUGS EATING AN ORANGE CARROT
(SEE SHEET 2 AND ACCOMPANYING PHOTO IN TEXT)
0 1 2 3 4 5 6 FEET
2 METERS
SCALE BARS
HISTORICAL AVIATION ALBUM
VOUGHT XF5U-1
1945-48
SCALE, ORIGINAL 1:24
REPRO. 1:48
DRAWN BY: PAUL R. MATT
© HISTORICAL AVIATION ALBUM 1970
P. O. BOX 33
TEMPLE CITY, CALIF, 91780
DRAWING No. 8-70-A
PLATE 1 of 3

GENERAL SPECIFICATIONS

BASED ON ENGINEERING AND GROUND EVALUATION
ACTUAL FLIGHT TESTS CANCELLED BY U.S. NAVY

WEIGHT, BASIC (Approx.)	14,500 lbs.
WEIGHT, NORMAL	16,500 lbs.
WEIGHT, MAX. LOADED	18,635 lbs.
TAKEOFF DISTANCE, NO WIND	710 feet
17 KNOT HEADWIND	490 feet
CLIMB, AT 14,550 lbs.	3,000 ft./min S.L. TO 5,000 feet GRADUATING DOWN TO 1,000 ft./min. AT 12,000 feet
MAXIMUM SPEED, CONTIOUS	388 mph AT 15,000 feet 368 mph AT 20,000 feet
RANGE, MAX. (INTERNAL FUEL)	740 miles
AT CRUISE OF	280 mph AT 10,000 feet

PERFORMANCE BASED ON USE OF TWO P&W R-2000-7 AIR COOLED RADIAL ENGINES OF
1,350 h.p. at 2,700 r.p.m.
1,100 h.p. at 2,550 r.p.m. (NORMAL)

PROPOSED ARMAMENT (NEVER FITTED)
SIX .50 CAL. COLT BROWNING M.G.s, 400 R.P.G. INTERCHANGABLE WITH FOUR 20 mm CANNON AND/OR TWO 1,000 lb. BOMBS OR TWO 125 gal. LONG RANGE EXTERNAL FUEL TANKS.

EXTERIOR CONSTRUCTION - CHANCE VOUGHT DEVELOPED *METALITE*, ALUMINUM SHEETS BONDED OVER A CORE (SANDWICH) OF BALSA WOOD. CONSTRUCTION WAS EXCEPTIONALLY STRONG, FINISH EXTREMELY SMOOTH.

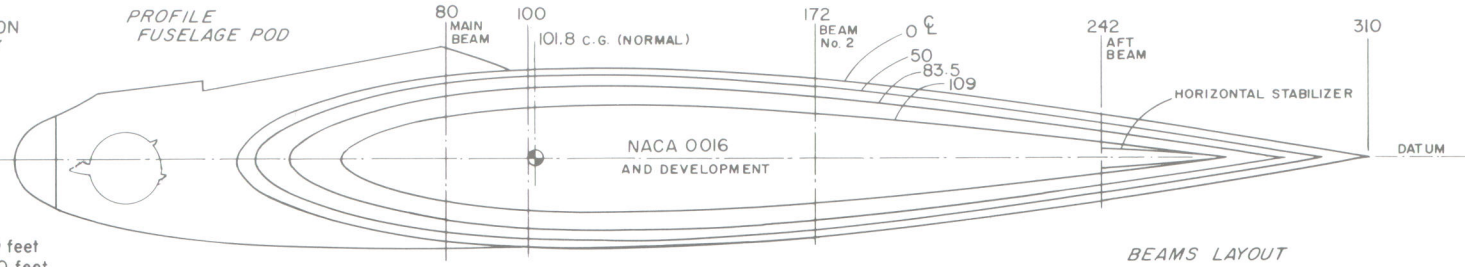

PERSONA INSIGNIA
DISC 18" DIA.
3× SCALE APPROX.
FOR DETAILS SEE
SHEET-1.

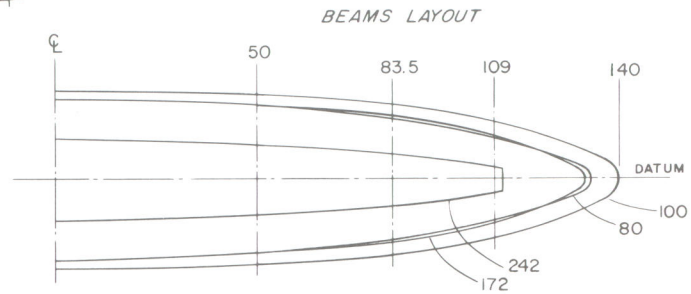

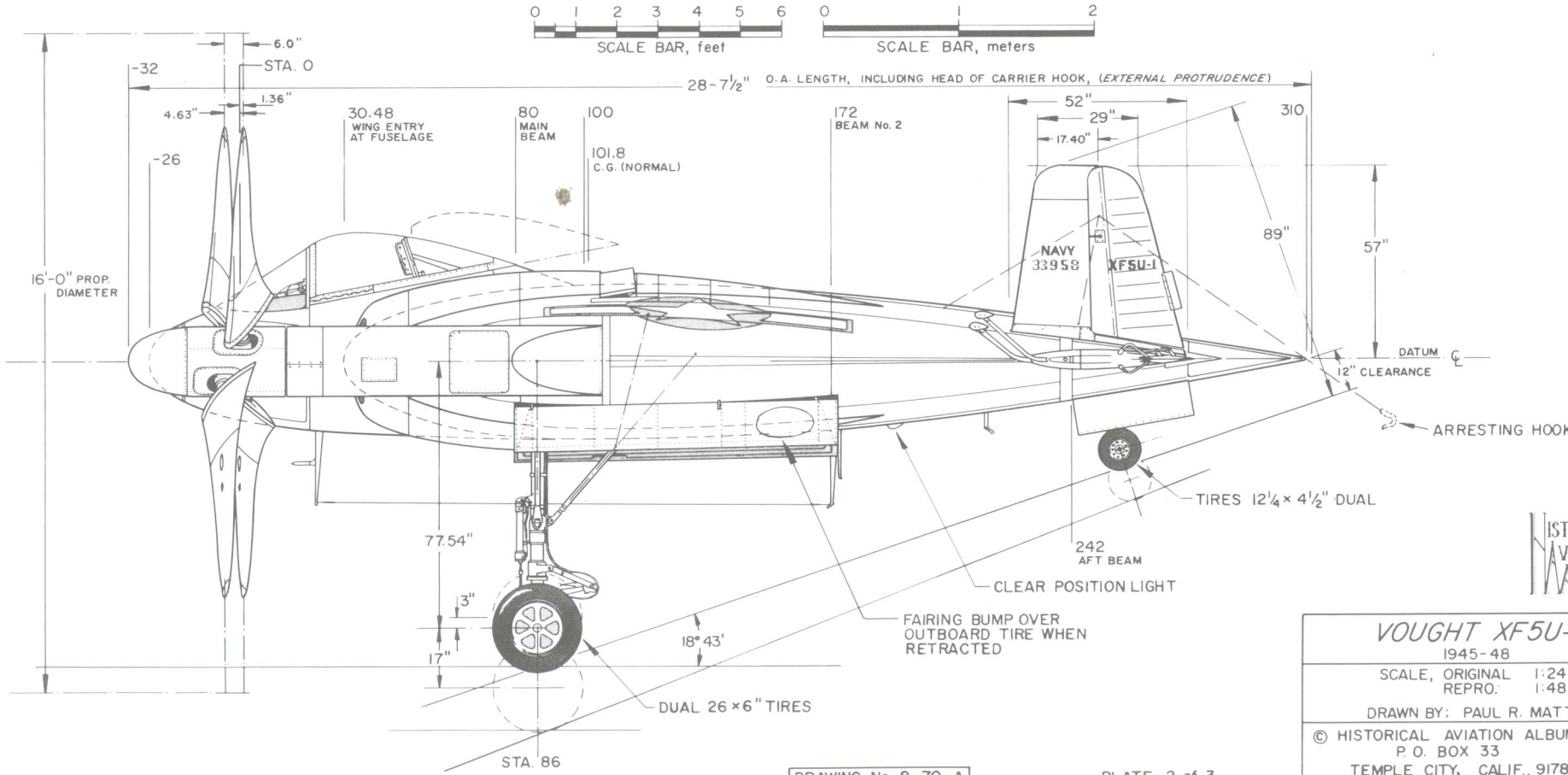

HISTORICAL AVIATION ALBUM

VOUGHT XF5U-1
1945-48
SCALE, ORIGINAL 1:24 REPRO. 1:48
DRAWN BY: PAUL R. MATT
© HISTORICAL AVIATION ALBUM 1970 P.O. BOX 33 TEMPLE CITY, CALIF., 91780

DRAWING No. 8-70-A

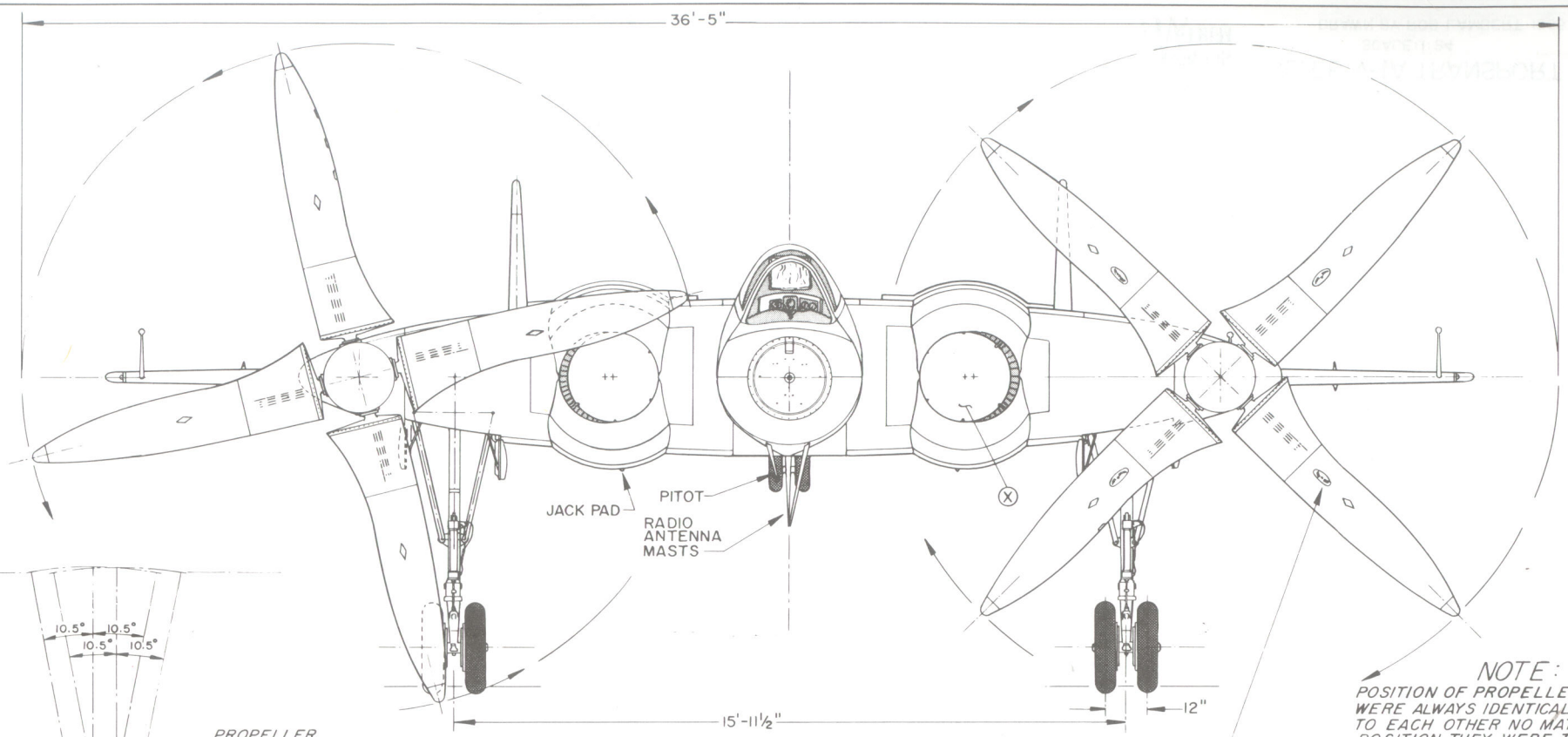

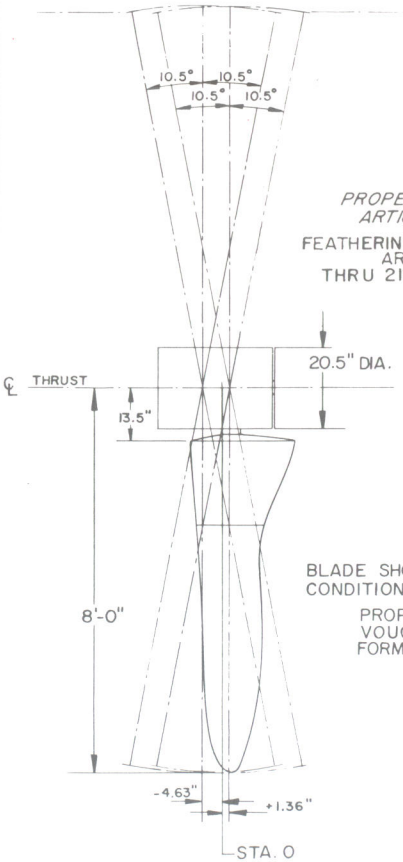

PROPELLER ARTICULATION & FEATHERING

FEATHERING ADJUSTABLE FROM COCKPIT. ARTICULATION WAS SELF-ADJUSTING THRU 21° ARC POSITIONS. BLADES OPERATED IN A MANNER SIMILAR TO THE HELICOPTER ROTOR BLADES. EACH PROPELLER SYSTEM GEARED TO OPERATE IN HARMONY WITH EACH OTHER AT ALL TIMES.

(X)-MASTER AIR INTAKE, ENGINE, OIL COOLING AND CARBURETOR AIR

HAMILTON-STANDARD PROPELLER TRADEMARK ON PORT SIDE BLADES ONLY. WHITE TRACKING DIAMONDS ON ALL BLADES, YELLOW TIPPED.

NOTE:

POSITION OF PROPELLER BLADES WERE ALWAYS IDENTICAL OR RELATED TO EACH OTHER NO MATTER WHAT POSITION THEY WERE TURNING IN, STOPPED OR STARTED. THEY WERE GEARED TO HARMONIZE AIR FLOW AND TORQUE EVENLY AND THE SAME ON BOTH SIDES OF THE AIRCRAFT AT ALL TIMES. WE HAVE MOVED THEM INTO UNRELATED POSITIONS SO THAT OTHER AFT DETAILS SHOW MORE CLEARLY.

BLADE SHOWN IN FULL FEATHERED CONDITION AND FLAT LAYOUT PROFILE

PROPELLERS SPECIALLY DEVELOPED BY VOUGHT AND HAMILTON STANDARD ENGINEERS. FORMICA IMPREGNATED WOOD CONSTRUCTION.

OUR SINCERE APPRECIATION IS EXTENDED TO MR. CHARLES ZIMMERMAN, INVENTOR-BOON GUYTON, CHIEF TEST PILOT- WILLIAM Z. MILLER, CHIEF DRAFTSMAN- WILLIAM SCHOOLFIELD, CHIEF AERODYNAMICIST ON THE XF5U-1 PROJECT FOR THEIR TIME, EFFORT AND INTEREST IN REVIEWING, CORRECTING AND COMMENTING ON THESE DRAWINGS AND THE ACCOMPANYING ARTICLE BY ARTHUR L. SCHOENI.
A SPECIAL THANKS TO MR. SCHOENI FOR MAKING IT COME ABOUT. THE ASSISTANCE OF THESE MEN IS HIGHLY VALUED, MAKING THIS A JOINT EFFORT AND THE VIEWS HEREWITH AS ACCURATE AS POSSIBLE.

DRAWINGS PREPARED FROM CV401000 PRINTS AND RELATED AND PERSONAL CHECKING BY WILLIAM Z. MILLER- XF5U-1 CHIEF DRAFTSMAN

DRAWING No. 8-70-A

PLATE 3 of 3

HISTORICAL AVIATION ALBUM

VOUGHT XF5U-1

1945-48

SCALE, ORIGINAL 1:24
REPRO. 1:48

DRAWN BY: PAUL R. MATT

© HISTORICAL AVIATION ALBUM 1970
P.O. BOX 33
TEMPLE CITY, CALIF., 91780

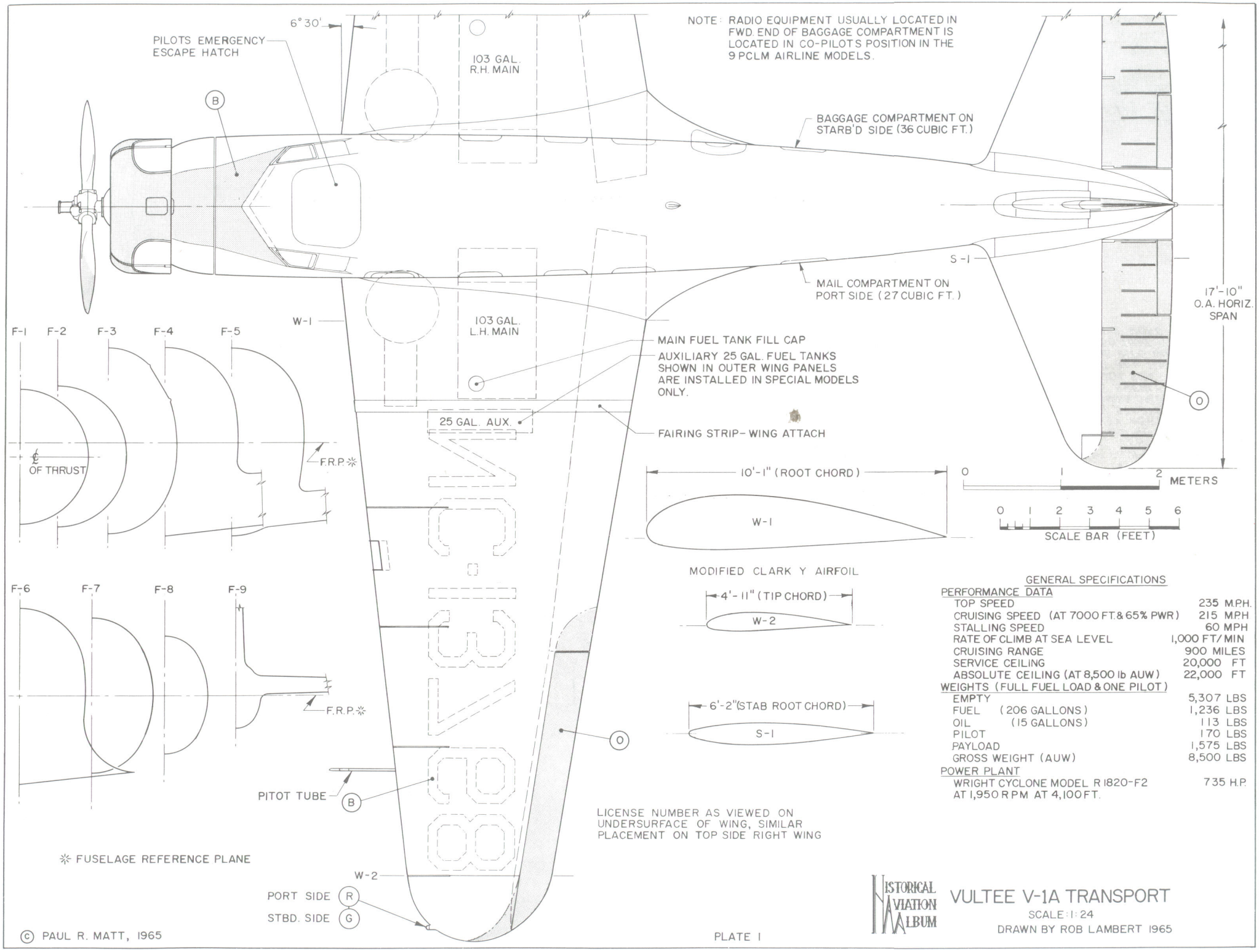

GENERAL SPECIFICATIONS

PERFORMANCE DATA	
TOP SPEED	235 M.P.H.
CRUISING SPEED (AT 7000 FT. & 65% PWR)	215 M.P.H
STALLING SPEED	60 MPH
RATE OF CLIMB AT SEA LEVEL	1,000 FT/MIN
CRUISING RANGE	900 MILES
SERVICE CEILING	20,000 FT
ABSOLUTE CEILING (AT 8,500 lb AUW)	22,000 FT
WEIGHTS (FULL FUEL LOAD & ONE PILOT)	
EMPTY	5,307 LBS
FUEL (206 GALLONS)	1,236 LBS
OIL (15 GALLONS)	113 LBS
PILOT	170 LBS
PAYLOAD	1,575 LBS
GROSS WEIGHT (AUW)	8,500 LBS
POWER PLANT	
WRIGHT CYCLONE MODEL R 1820-F2 AT 1,950 RPM AT 4,100 FT.	735 H.P.

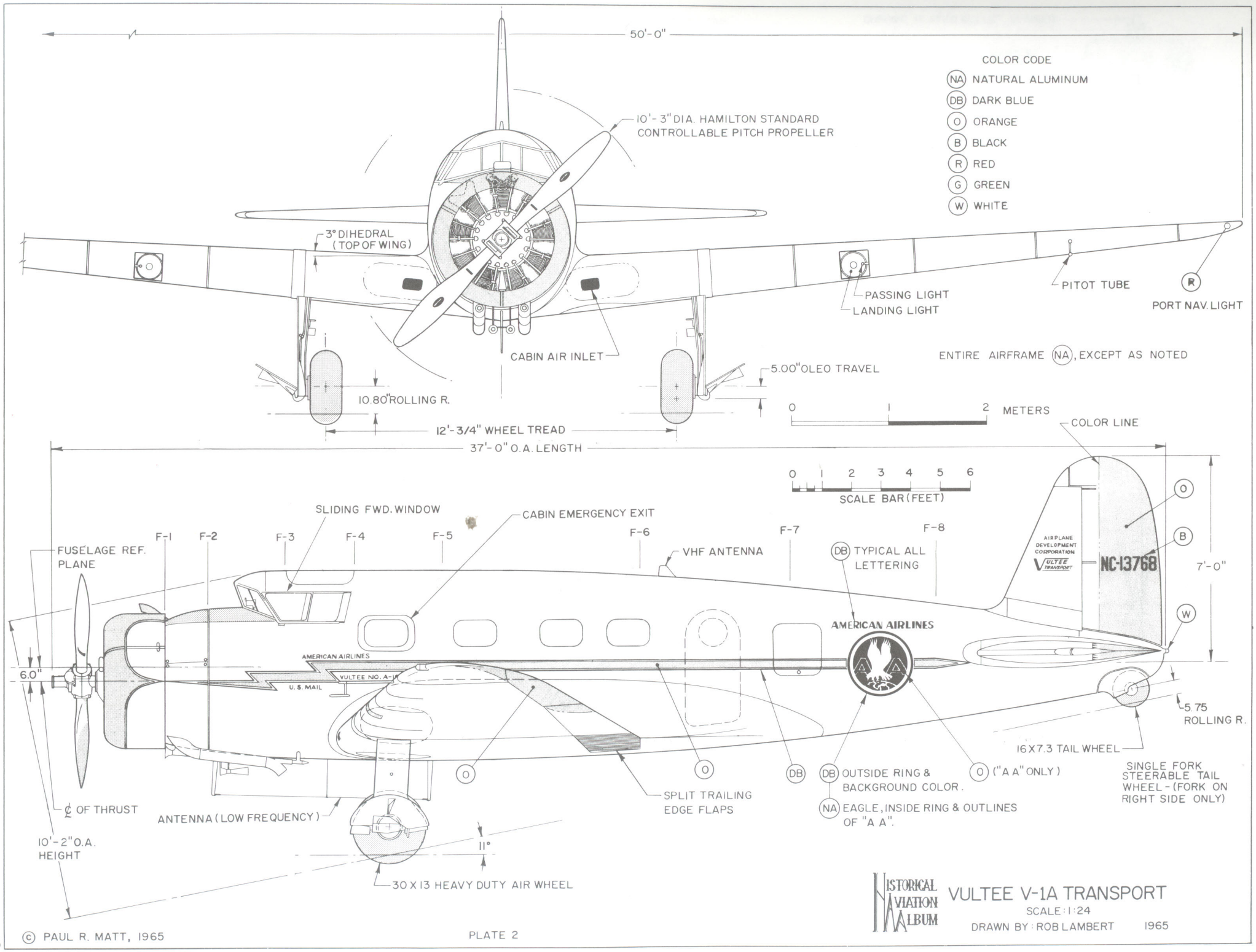
50'-0"
COLOR CODE
NA NATURAL ALUMINUM
DB DARK BLUE
O ORANGE
B BLACK
R RED
G GREEN
W WHITE
10'-3" DIA. HAMILTON STANDARD CONTROLLABLE PITCH PROPELLER
3° DIHEDRAL (TOP OF WING)
PITOT TUBE
PASSING LIGHT
LANDING LIGHT
PORT NAV. LIGHT
CABIN AIR INLET
ENTIRE AIRFRAME NA, EXCEPT AS NOTED
5.00" OLEO TRAVEL
10.80" ROLLING R.
0 1 2 METERS
12'-3/4" WHEEL TREAD
COLOR LINE
37'-0" O.A. LENGTH
0 1 2 3 4 5 6
SCALE BAR (FEET)
SLIDING FWD. WINDOW
CABIN EMERGENCY EXIT
F-1 F-2 F-3 F-4 F-5 F-6 F-7 F-8
FUSELAGE REF. PLANE
VHF ANTENNA
DB TYPICAL ALL LETTERING
AIRPLANE DEVELOPMENT CORPORATION
VULTEE TRANSPORT
NC-13768
7'-0"
AMERICAN AIRLINES
AMERICAN AIRLINES
VULTEE NO. A-1
U. S. MAIL
6.0"
5.75 ROLLING R.
16 X 7.3 TAIL WHEEL
SINGLE FORK STEERABLE TAIL WHEEL - (FORK ON RIGHT SIDE ONLY)
DB OUTSIDE RING & BACKGROUND COLOR.
O ("A A" ONLY)
NA EAGLE, INSIDE RING & OUTLINES OF "A A".
SPLIT TRAILING EDGE FLAPS
℄ OF THRUST
ANTENNA (LOW FREQUENCY)
10'-2" O.A. HEIGHT
11°
30 X 13 HEAVY DUTY AIR WHEEL
HISTORICAL AVIATION ALBUM
VULTEE V-1A TRANSPORT
SCALE: 1:24
DRAWN BY: ROB LAMBERT 1965
© PAUL R. MATT, 1965
PLATE 2

Waco YMF-5

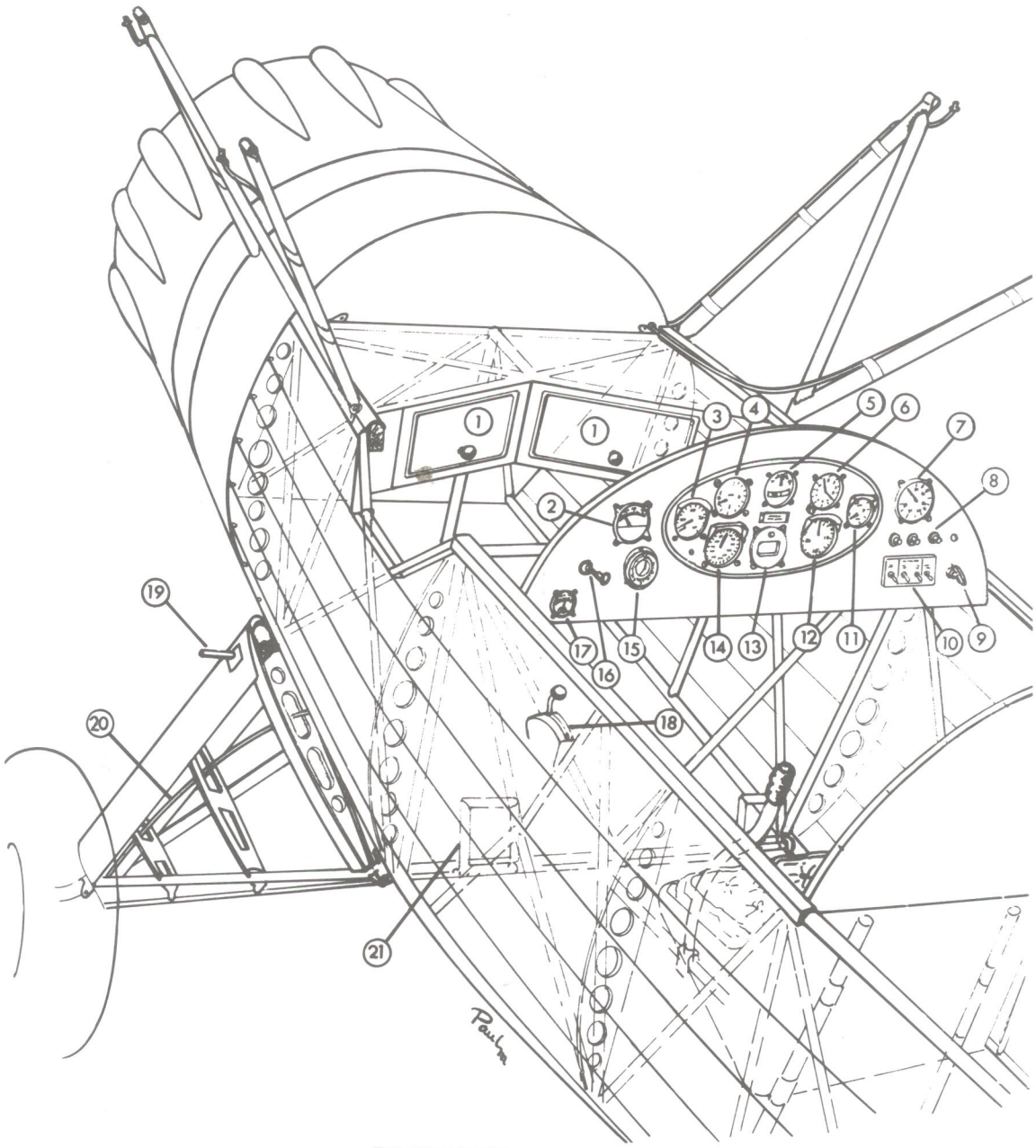

1	Glove Compartment	12	Tachometer
2	Cylinder Head Temp.	13	Compass
3	Oil Temp.	14	Airspeed
4	Climb Indicator	15	Clock
5	Turn & Bank	16	Engine Primer
6	Altimeter	17	Throttle and Mixture Control
7	Manifold Pressure	18	Service Step
8	Electrical Fuses	19	Brake Line
9	Parking Brake Lock	20	Rudder Pedal
10	Ignition Switches		
11	Oil Pressure		

GENERAL SPECIFICATIONS

	MODEL UMF	MODEL YMF
WEIGHT EMPTY	1485 lbs.	1540 lbs.
USEFULL LOAD	1015 lbs.	960 lbs.
GROSS WEIGHT	2500 lbs.	2500 lbs.
TOP SPEED	143 mph	147 mph
CRUISING SPEED	128 mph	129 mph
LANDING SPEED	47 mph	47 mph
RATE OF CLIMB, INITIAL	1100 ft/min	1250 ft/min
FUEL CAPACITY	50 gals.	50 gals.
OIL CAPACITY	5 gals.	5 gals.
CRUISING RANGE	450 miles	430 miles
SERVICE CEILING	14,500 ft.	16,000 ft.
WING AREA	233.5 sq.ft	233.5 sq.ft.
WING LOADING	10.7 lbs./sq ft	10.7 lbs./sq ft
POWER LOADING	11.9 lbs/h.p.	11.1 lbs/h.p.

POWER: UMF-3/5 7 Cylinder 210 H.P. CONTINENTAL W-670
YMF-3/5 7 Cylinder 225 H.P. JACOBS L-4

COLORING NOTES

AIRCRAFT PORTRAYED, NC 14031 c/n 3944
ORIGINAL OWNER, STEPHEN J. PATTERSON
ENTIRE AIRCRAFT - NAVY BLUE
TRIM - CREAM
FUSELAGE AND WHEEL PANTS STRIPING, PIN STRIPE ON ENGINE COWL & DECOR ON FAIRING BUMPS, WING & RUDDER LICENSE, PERSONALIZED EMBLEMS & NAMEPLATE, 9" EDGING AROUND TOPSIDE OF UPPER WING PANELS AND UNDERSURFACE OF LOWER WINGS.
ENTERIOR FINISH - BLUE LEATHER

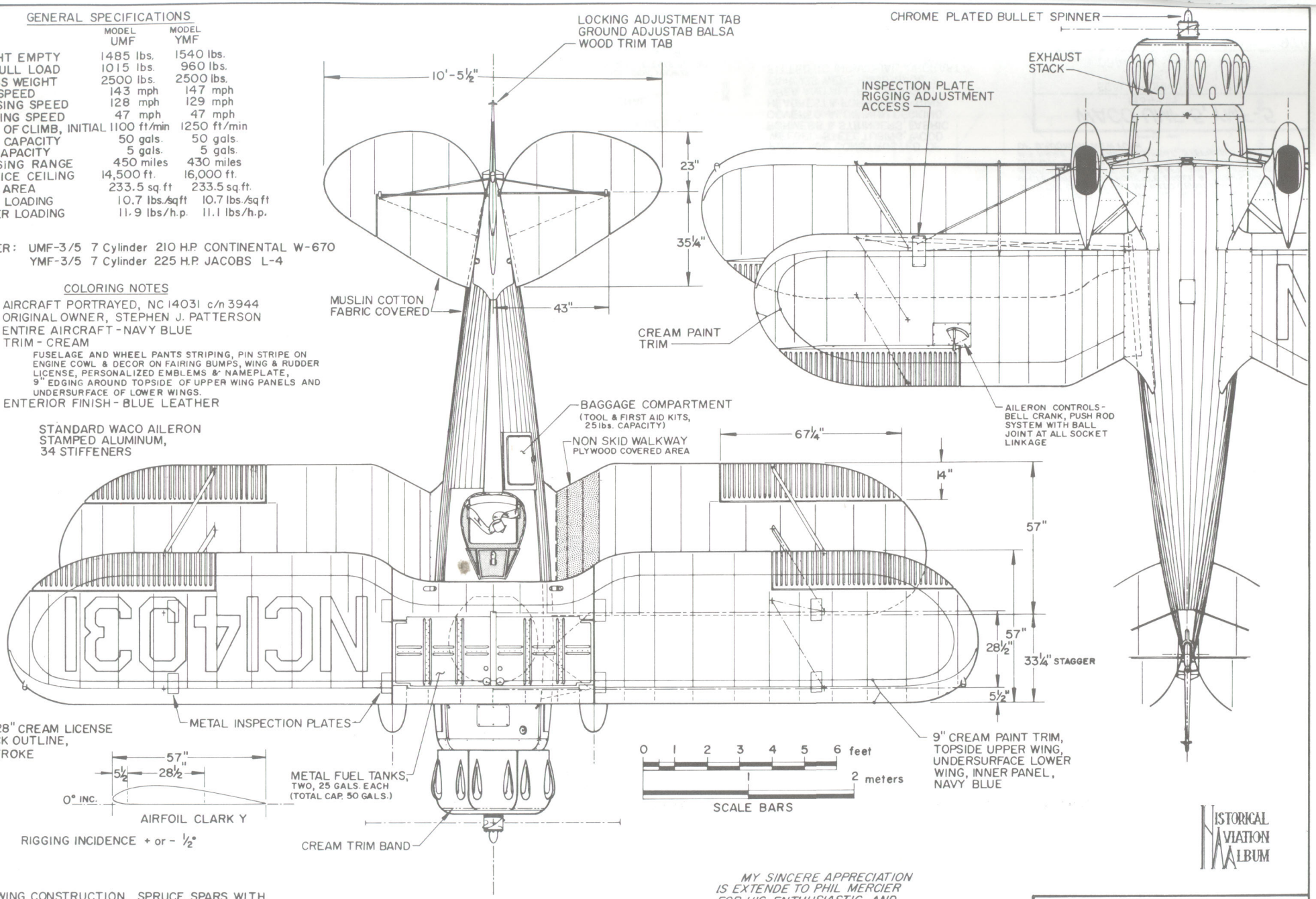

WING CONSTRUCTION, SPRUCE SPARS WITH SPRUCE & MAHOGANY RIBS, ALUMINUM SHEET LEADING EDGES, LINEN COVERED.

MY SINCERE APPRECIATION IS EXTENDE TO PHIL MERCIER FOR HIS ENTHUSIASTIC AND UNTIRING INTEREST AND HELP IN THE PREPARATION OF THESE DRAWINGS

HISTORICAL AVIATION ALBUM

WACO UMF-5, YMF-5

1934-35

SCALE - ORIGINAL 1:24
REPRO. 1:48
DRAWN BY - PAUL R. MATT

© HISTORICAL AVIATION ALBUM 1974
P.O. BOX 33
TEMPLE CITY, CALIF. 91780

DRAWING No. 13-97-A

103

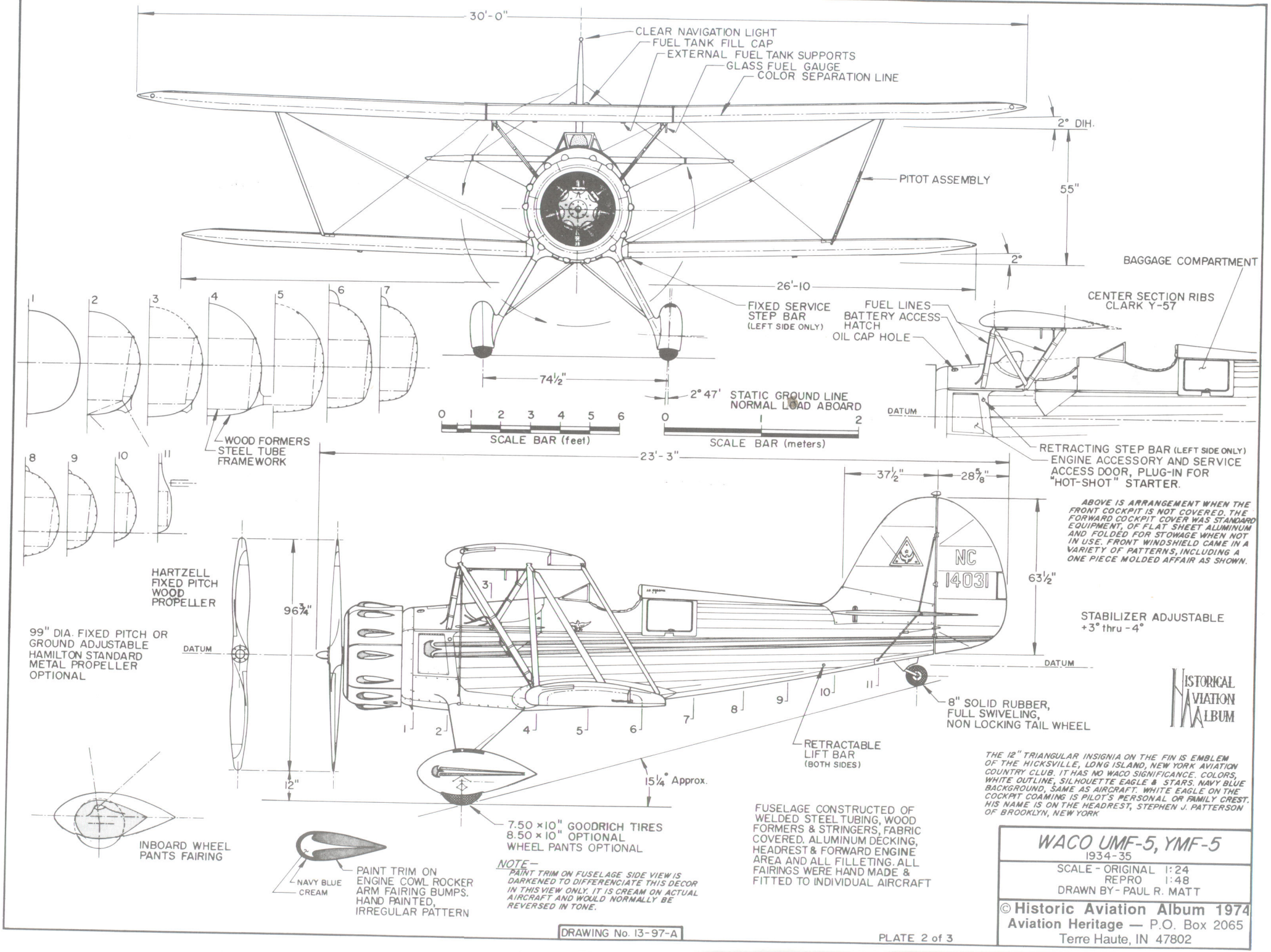
30'-0"
CLEAR NAVIGATION LIGHT
FUEL TANK FILL CAP
EXTERNAL FUEL TANK SUPPORTS
GLASS FUEL GAUGE
COLOR SEPARATION LINE
2° DIH.
PITOT ASSEMBLY
55"
2°
26'-10
FIXED SERVICE STEP BAR (LEFT SIDE ONLY)
74½"
2° 47'
STATIC GROUND LINE NORMAL LOAD ABOARD
SCALE BAR (feet)
SCALE BAR (meters)
BAGGAGE COMPARTMENT
CENTER SECTION RIBS CLARK Y-57
FUEL LINES
BATTERY ACCESS HATCH
OIL CAP HOLE
DATUM
RETRACTING STEP BAR (LEFT SIDE ONLY)
ENGINE ACCESSORY AND SERVICE ACCESS DOOR, PLUG-IN FOR "HOT-SHOT" STARTER.
WOOD FORMERS
STEEL TUBE FRAMEWORK
23'-3"
37½"
28⅝"
ABOVE IS ARRANGEMENT WHEN THE FRONT COCKPIT IS NOT COVERED. THE FORWARD COCKPIT COVER WAS STANDARD EQUIPMENT, OF FLAT SHEET ALUMINUM AND FOLDED FOR STOWAGE WHEN NOT IN USE. FRONT WINDSHIELD CAME IN A VARIETY OF PATTERNS, INCLUDING A ONE PIECE MOLDED AFFAIR AS SHOWN.
HARTZELL FIXED PITCH WOOD PROPELLER
96¾"
NC 14031
63½"
STABILIZER ADJUSTABLE +3° thru -4°
99" DIA. FIXED PITCH OR GROUND ADJUSTABLE HAMILTON STANDARD METAL PROPELLER OPTIONAL
DATUM
DATUM
8" SOLID RUBBER, FULL SWIVELING, NON LOCKING TAIL WHEEL
RETRACTABLE LIFT BAR (BOTH SIDES)
12"
15¼° Approx.
7.50 × 10" GOODRICH TIRES
8.50 × 10" OPTIONAL
WHEEL PANTS OPTIONAL
INBOARD WHEEL PANTS FAIRING
NAVY BLUE
CREAM
PAINT TRIM ON ENGINE COWL ROCKER ARM FAIRING BUMPS. HAND PAINTED, IRREGULAR PATTERN
NOTE— PAINT TRIM ON FUSELAGE SIDE VIEW IS DARKENED TO DIFFERENCIATE THIS DECOR IN THIS VIEW ONLY. IT IS CREAM ON ACTUAL AIRCRAFT AND WOULD NORMALLY BE REVERSED IN TONE.
FUSELAGE CONSTRUCTED OF WELDED STEEL TUBING, WOOD FORMERS & STRINGERS, FABRIC COVERED. ALUMINUM DECKING, HEADREST & FORWARD ENGINE AREA AND ALL FILLETING. ALL FAIRINGS WERE HAND MADE & FITTED TO INDIVIDUAL AIRCRAFT
THE 12" TRIANGULAR INSIGNIA ON THE FIN IS EMBLEM OF THE HICKSVILLE, LONG ISLAND, NEW YORK AVIATION COUNTRY CLUB. IT HAS NO WACO SIGNIFICANCE. COLORS, WHITE OUTLINE, SILHOUETTE EAGLE & STARS. NAVY BLUE BACKGROUND, SAME AS AIRCRAFT. WHITE EAGLE ON THE COCKPIT COAMING IS PILOT'S PERSONAL OR FAMILY CREST. HIS NAME IS ON THE HEADREST, STEPHEN J. PATTERSON OF BROOKLYN, NEW YORK
HISTORICAL AVIATION ALBUM
WACO UMF-5, YMF-5
1934-35
SCALE - ORIGINAL 1:24
REPRO 1:48
DRAWN BY - PAUL R. MATT
© Historic Aviation Album 1974
Aviation Heritage — P.O. Box 2065
Terre Haute, IN 47802
DRAWING No. 13-97-A
PLATE 2 of 3

CENTER LINE LAYOUT OF MAJOR COMPONENTS

ALL DIMENSIONS ARE BETWEEN CENTER LINES UNLESS DRAWN OTHERWISE.
ALL DIMENSIONS ARE IN INCHES.

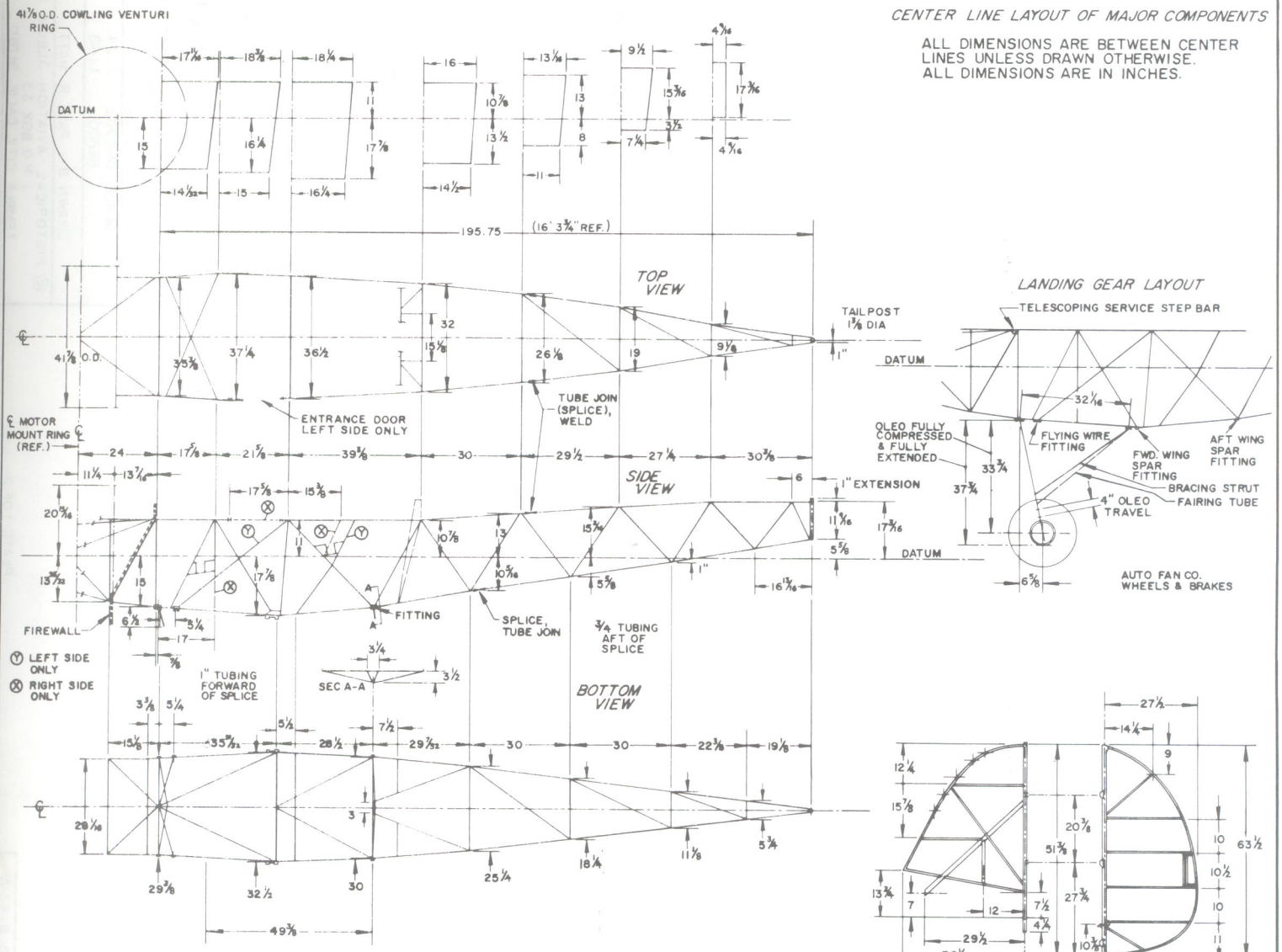

UPPER RIGHT WING PANEL

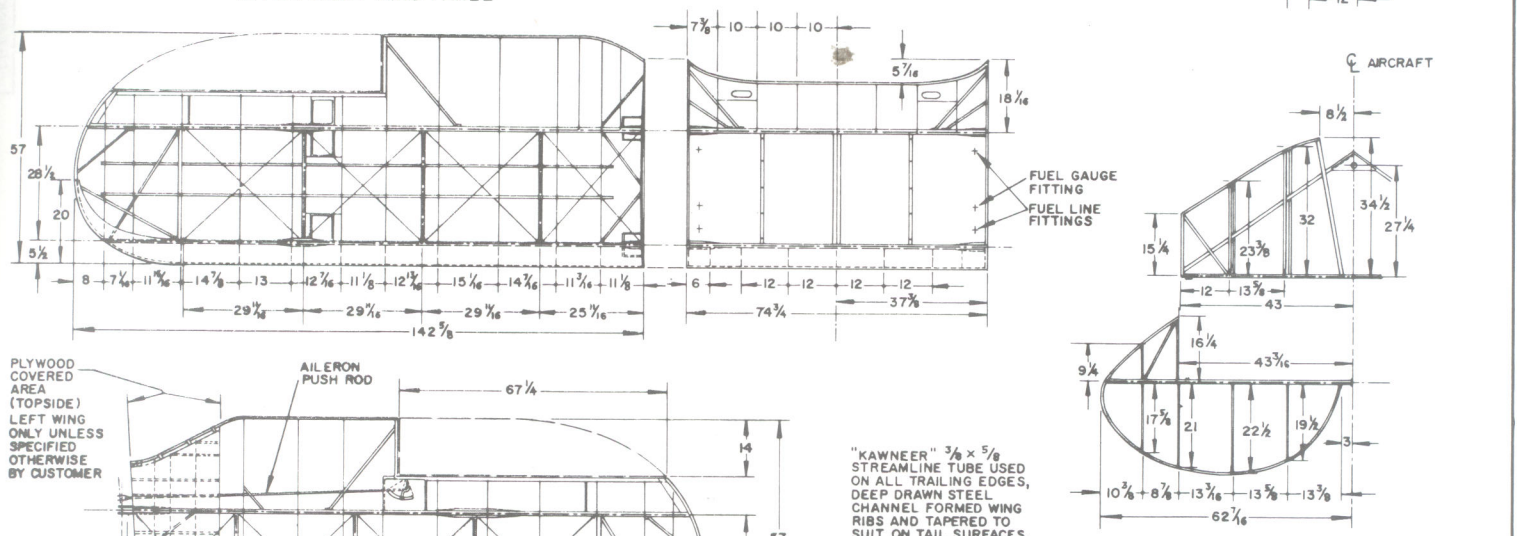

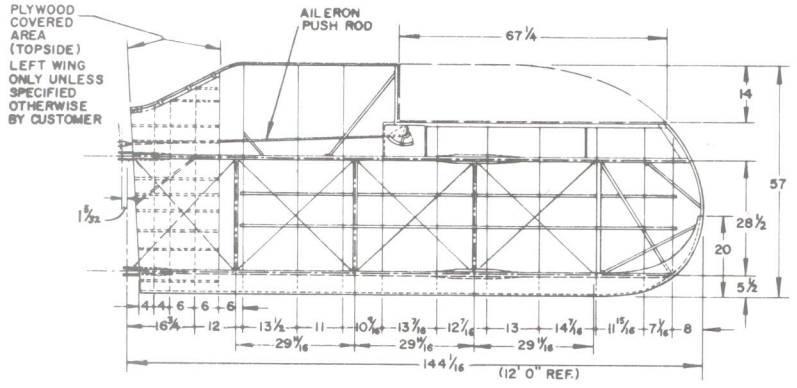

LOWER LEFT WING PANEL

"KAWNEER" 3/8 × 5/8 STREAMLINE TUBE USED ON ALL TRAILING EDGES, DEEP DRAWN STEEL CHANNEL FORMED WING RIBS AND TAPERED TO SUIT ON TAIL SURFACES.

HISTORICAL AVIATION ALBUM

WACO UMF-5, YMF-5

1934 - 35

SCALE - ORIGINAL 1:24
REPRO. 1:48
DRAWN BY - PAUL R. MATT

© HISTORICAL AVIATION ALBUM 1974
P. O. BOX 33
TEMPLE CITY, CALIF. 91780

DRAWING No. 13-97-A

PLATE 3 of 3

105

GENERAL SPECIFICATIONS

WEIGHT EMPTY	1870 lbs
USEFUL LOAD	780 lbs
GROSS WEIGHT	2650 lbs
TOP SPEED	138 mph
CRUISING SPEED	120 mph
LANDING SPEED	48 mph
RATE OF CLIMB	1000 ft/min, initial, S.L. 800
FUEL CAPACITY	50 gallons
OIL CAPACITY	5 gallons
CRUISING RANGE	520 miles
SERVICE CEILING	16,000 feet
WING AREA	244 sq. feet
WING LOADING	11.81 lbs/sq. ft.
POWER LOADING	11.81 lbs/hp

POWER - CONTINENTAL W670-6A, 220 HP.
225 H.P. MAXIMUM AT 2075 RPM
COMPRESSION RATIO 5.4:1
210 H.P. AT CRUISE AND ALTITUDE

COLORING NOTES

STANDARD ARMY AIR CORPS, CIVILIAN PILOT TRAINING PROGRAM AND MILITARY VERSIONS ROYAL BLUE FUSELAGE, VERTICAL TAIL SURFACES AND LANDING GEAR STRUTS, CHROME YELLOW WINGS, HORIZONTAL TAIL SURFACES AND INTER-PLANE STRUTS - DETAILS BLACK

WINGS ARE SPRUCE SPAR WITH SPRUCE AND MAHOGANY RIB CONSTRUCTION, ALUMINUM FORMED LEADING EDGE, LINEN COVERED, TITANINE DOPED BERRYLOID COLORS

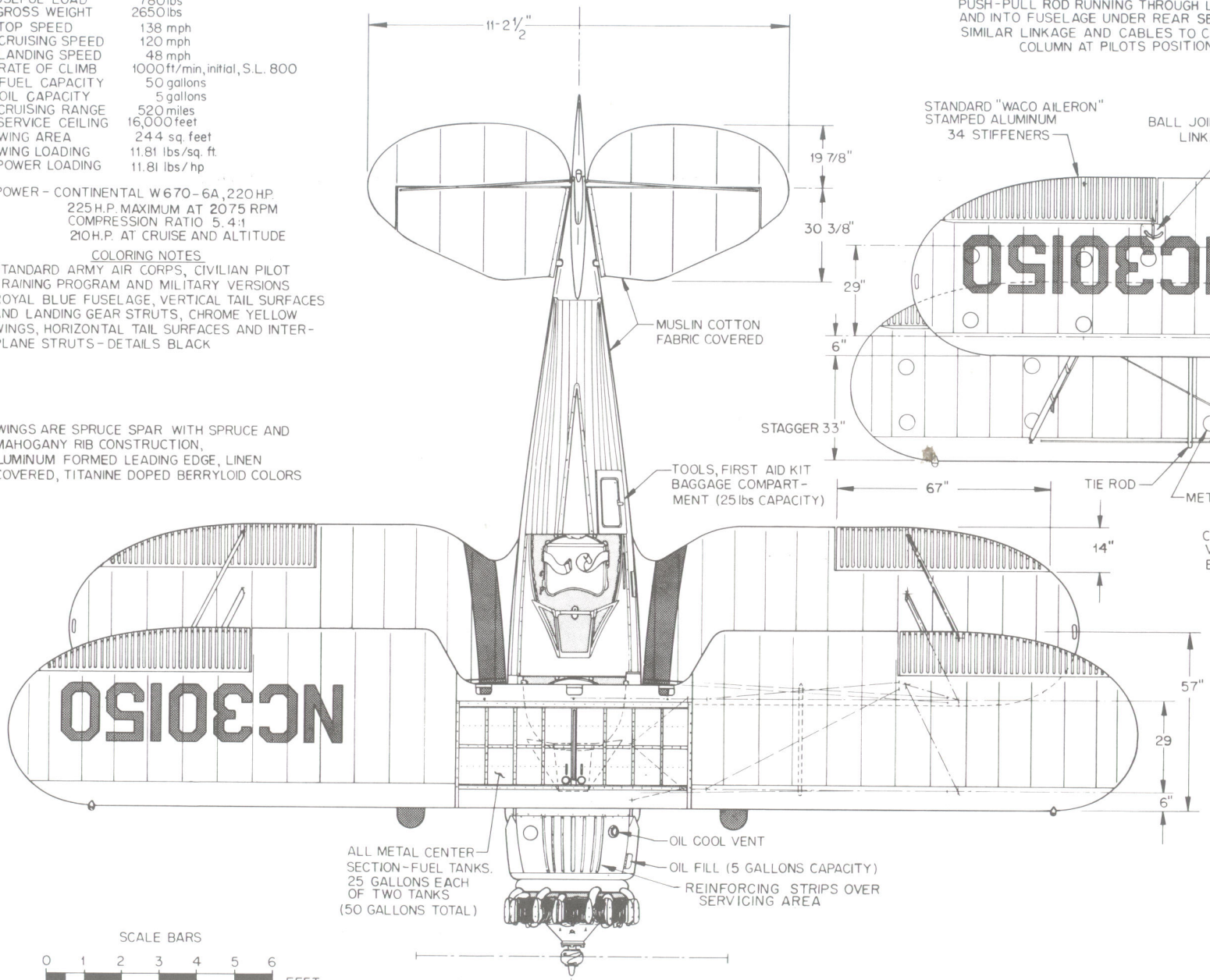

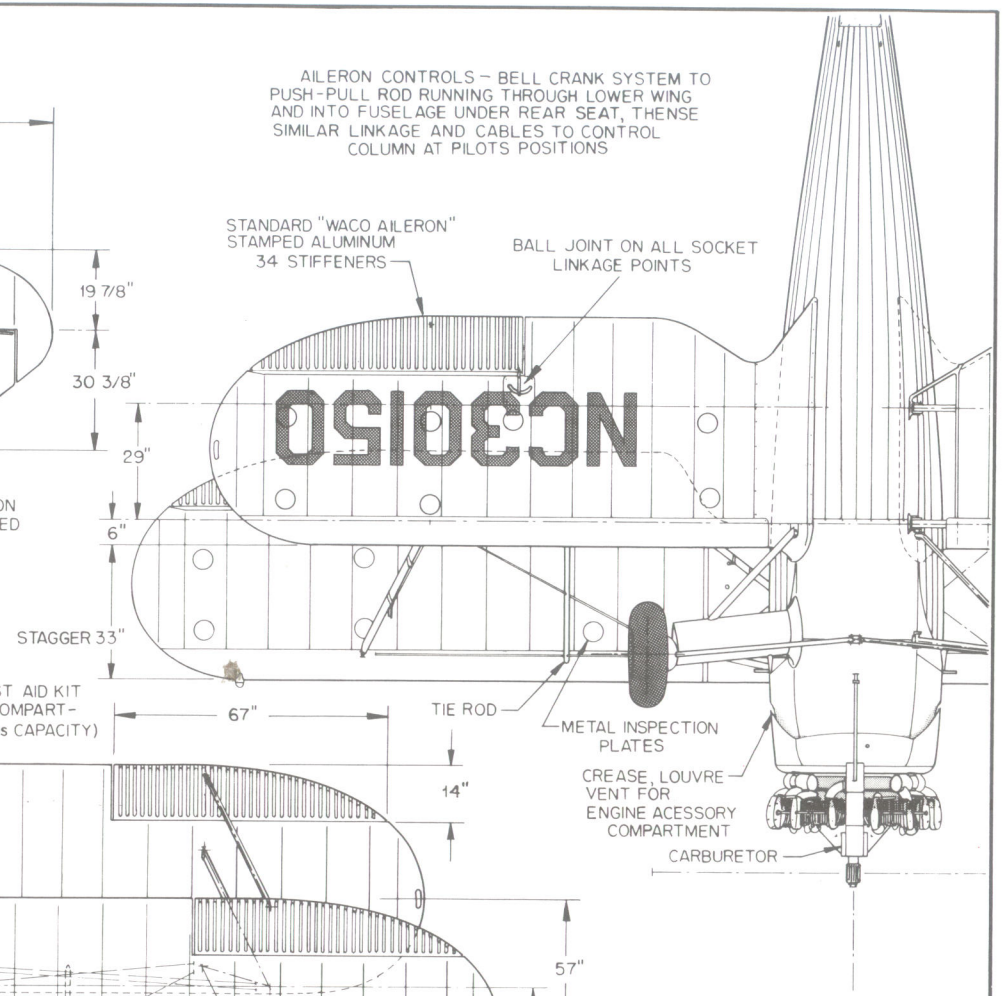

KNOWN REGISTRATION NUMBERS FOR STOCK UPF-7 AIRCRAFT

29308 thru	29363	-	55
29906 "	30179	-	273
32014 "	32195	-	181
	TOTAL		509

SCALE BARS

0 1 2 3 4 5 6 FEET

0 1 2 METERS

HISTORICAL AVIATION ALBUM

WACO UPF-7 1937-42	
SCALE - ORIGINAL	1:24
REPRO	1:48
DRAWN BY: PAUL R. MATT	

© HISTORICAL AVIATION ALBUM 1970
P.O BOX 33
TEMPLE CITY, CALIF. 91780

DRAWING NO. 8-67-A

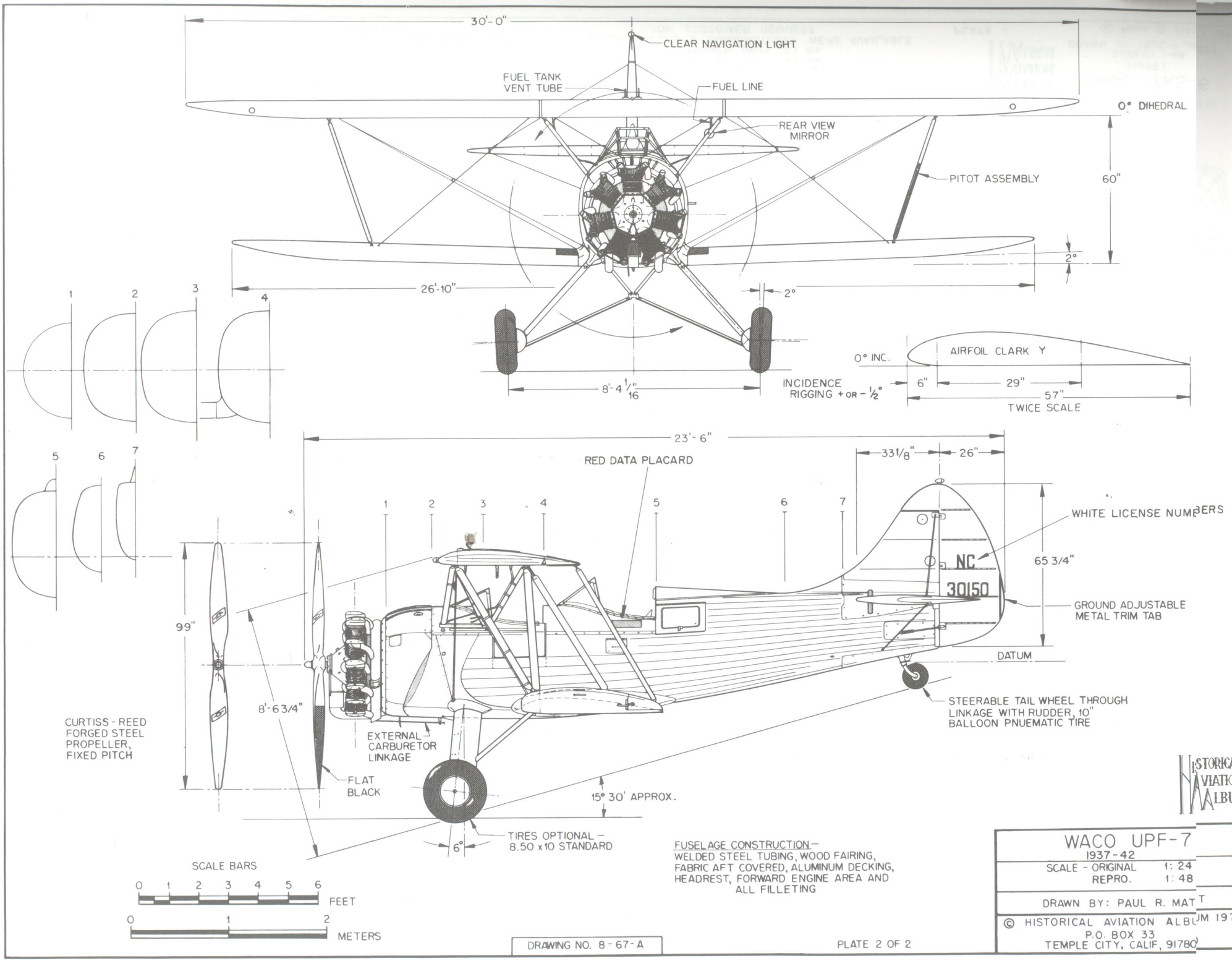
30'-0"
CLEAR NAVIGATION LIGHT
FUEL TANK VENT TUBE
FUEL LINE
0° DIHEDRAL
REAR VIEW MIRROR
PITOT ASSEMBLY
60"
2°
26'-10"
2°
8'-4 1/16"
INCIDENCE RIGGING + OR - 1/2°
0° INC.
AIRFOIL CLARK Y
6"
29"
57"
TWICE SCALE
23'-6"
33 1/8"
26"
RED DATA PLACARD
WHITE LICENSE NUMBERS
NC
30150
65 3/4"
GROUND ADJUSTABLE METAL TRIM TAB
DATUM
STEERABLE TAIL WHEEL THROUGH LINKAGE WITH RUDDER, 10" BALLOON PNUEMATIC TIRE
99"
8'-6 3/4"
CURTISS-REED FORGED STEEL PROPELLER, FIXED PITCH
EXTERNAL CARBURETOR LINKAGE
FLAT BLACK
15° 30' APPROX.
6°
TIRES OPTIONAL - 8.50 x 10 STANDARD
FUSELAGE CONSTRUCTION-
WELDED STEEL TUBING, WOOD FAIRING, FABRIC AFT COVERED, ALUMINUM DECKING, HEADREST, FORWARD ENGINE AREA AND ALL FILLETING
SCALE BARS
0 1 2 3 4 5 6 FEET
0 1 2 METERS
DRAWING NO. 8-67-A
PLATE 2 OF 2
HISTORICAL AVIATION ALBUM
WACO UPF-7
1937-42
SCALE - ORIGINAL 1:24
REPRO. 1:48
DRAWN BY: PAUL R. MATT
© HISTORICAL AVIATION ALBUM 1970
P.O. BOX 33
TEMPLE CITY, CALIF. 91780

GENERAL SPECIFICATIONS

WEIGHT EMPTY	1945 lbs.
USEFUL LOAD	767 lbs.
GROSS WEIGHT	2745 lbs.
TOP SPEED	144 m.p.h. at S.L.
CRUISING SPEED	135 m.p.h.
LANDING SPEED	55 m.p.h.
RATE OF CLIMB	850 ft./min.-initial
FUEL CAPACITY	70 gals.
OIL CAPACITY	5 gals.
CRUISING RANGE	518 miles
SERVICE CEILING	12,500 ft.
WING AREA	244 sq. ft.
WING LOADING	13.32 lbs./sq. ft.
POWER LOADING	14.44 lbs./H.P.

DATA APPROX. & APPLIES TO BASIC YKS-6 IN CLASS II CATEGORY UNDER A.T.C.-533

NOTE: THIS DRAWING IS TYPICAL OF THE ENTIRE -KS SERIES (UKS, VKS, YKS, ZKS, VKS-7F). MINOR CHANGES WERE INCORPORATED DURING VARIOUS YEARS OF PRODUCTION. DIMENSIONS & DESIGN VARIED LITTLE THROUGHOUT THESE YEARS O.A. LENGTH WITH PROPELLER USED, FUEL CAPACITY 50 to 70 gals., GEAR TREAD ACCORDING TO MODIFICATION & WEIGHT CLASS CATEGORY UNDER ATC PERMIT. GROSS WEIGHT & USEFUL LOADS VARIED ACCORDING TO OPTIONAL EQUIPMENT (INCL. ENGINE INSTALLATION) UNDER CLASS PERMIT ISSUED.

YKS-6 PLACARD SPEEDS - LEVEL FLIGHT 140 m.p.h. INDICATED
GLIDE OR DIVE 168 m.p.h. "

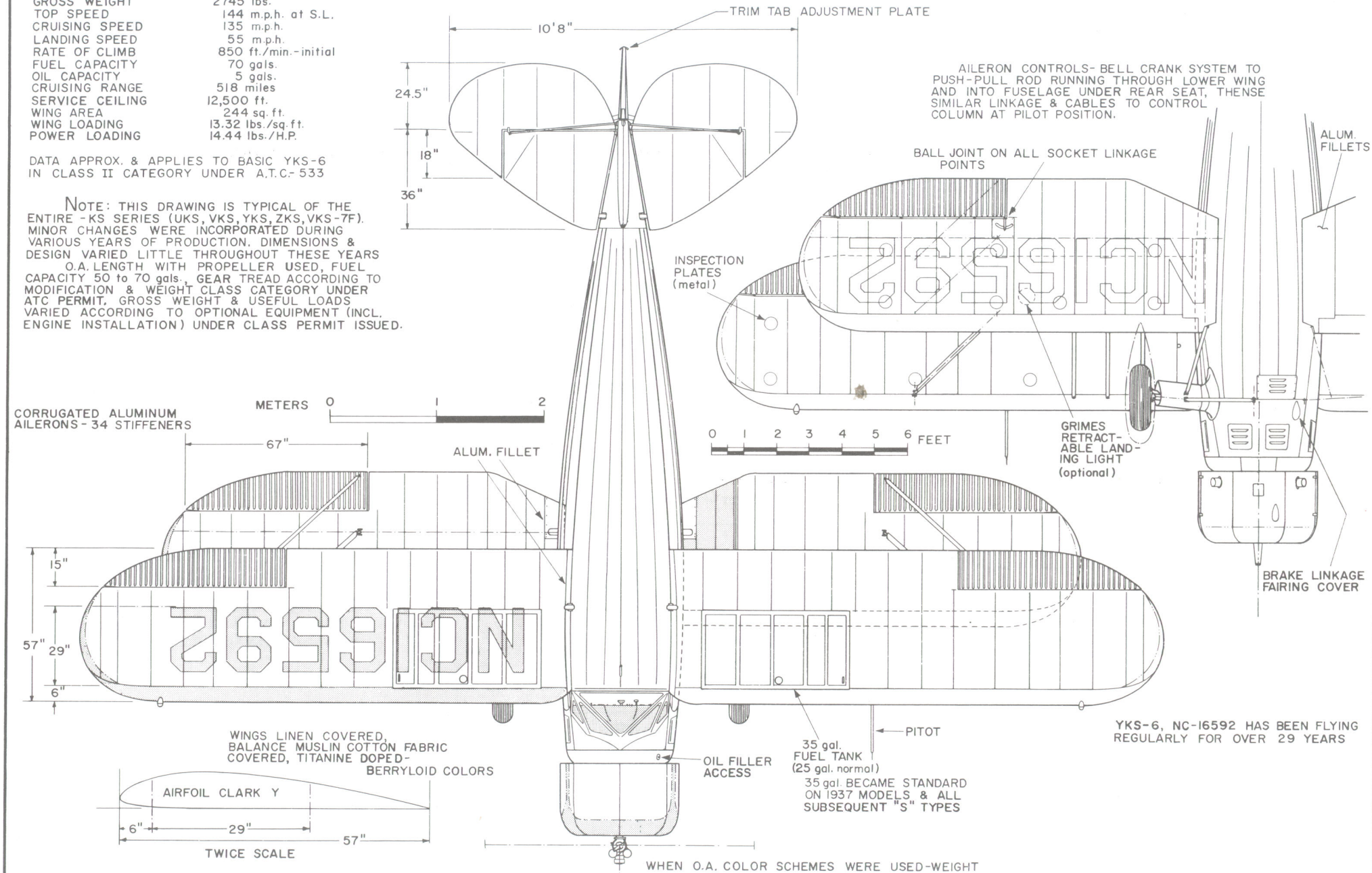

YKS-6, NC-16592 HAS BEEN FLYING REGULARLY FOR OVER 29 YEARS

COLORING NOTES:

AIRCRAFT PORTRAYED, O.A. SILVER, BLACK TRIM, NO PIN STRIPING - S/N 4526

STANDARD COLORS FOR -KC, -KS SERIES: GUNMETAL GRAY, SILVER, INSIGNIA BLUE WITH BLACK, VERMILLION, WHITE OR FRENCH GRAY TRIM

WHEN O.A. COLOR SCHEMES WERE USED-WEIGHT PENALTY WAS AS FOLLOWS;

SILVER	NONE
DARK BLUE	7 lbs.
BLACK	36 lbs.
VERMILLION	40 lbs.
WHITE	48 lbs.
FRENCH GRAY	51 lbs.

OTHER COLORS & COMBINATIONS WERE AVAILABLE UPON CUSTOMER REQUEST

HISTORICAL AVIATION ALBUM

WACO YKS-6

(1936)

SCALE: 1:48
DRAWN BY: PAUL R. MATT

PLATE 1

© PAUL R. MATT, 1965

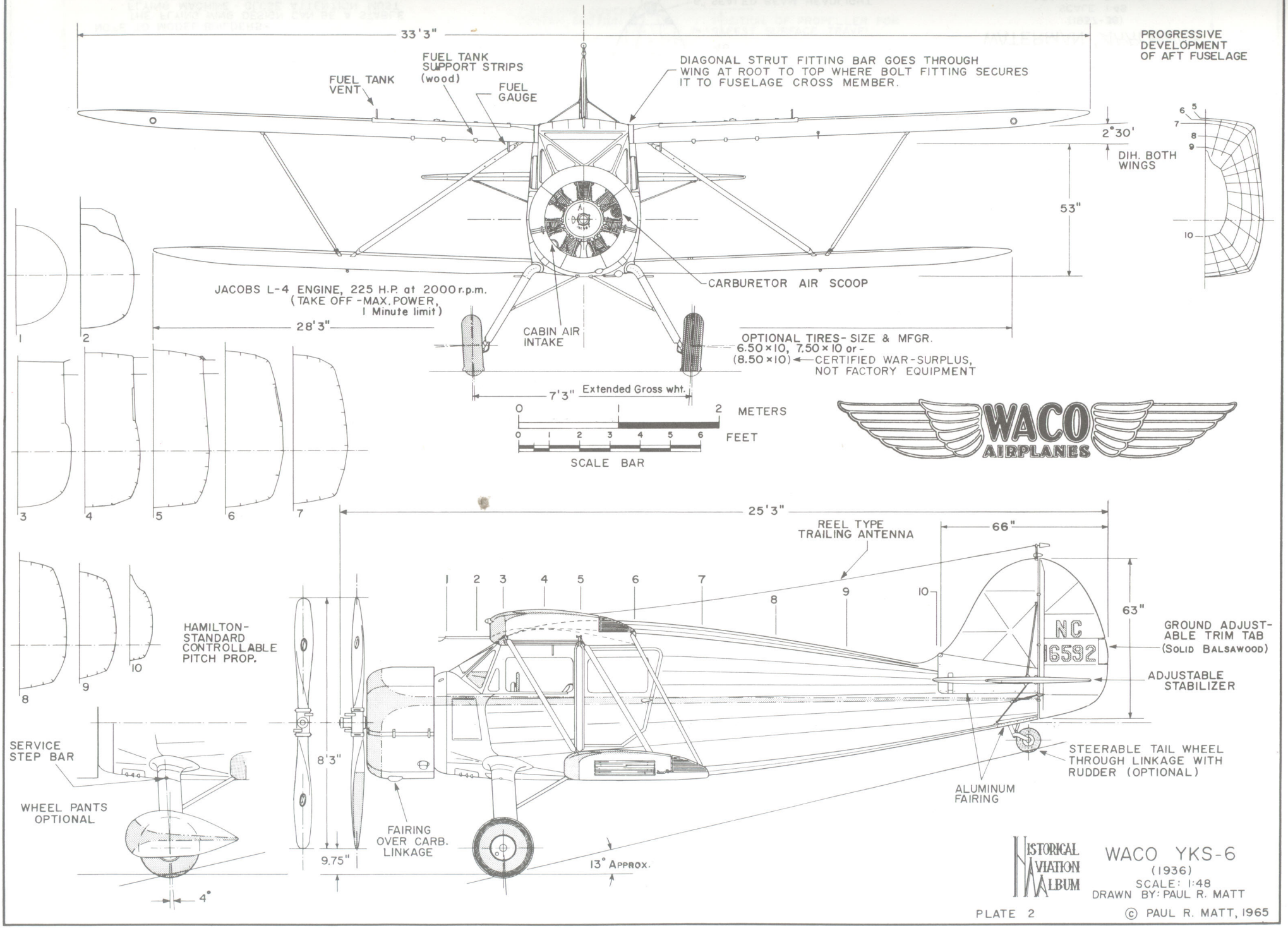
33'3"
FUEL TANK VENT
FUEL TANK SUPPORT STRIPS (wood)
FUEL GAUGE
DIAGONAL STRUT FITTING BAR GOES THROUGH WING AT ROOT TO TOP WHERE BOLT FITTING SECURES IT TO FUSELAGE CROSS MEMBER.
PROGRESSIVE DEVELOPMENT OF AFT FUSELAGE
2°30'
DIH. BOTH WINGS
53"
JACOBS L-4 ENGINE, 225 H.P. at 2000 r.p.m. (TAKE OFF - MAX. POWER, 1 Minute limit)
28'3"
CARBURETOR AIR SCOOP
CABIN AIR INTAKE
OPTIONAL TIRES - SIZE & MFGR. 6.50×10, 7.50×10 or - (8.50×10) ← CERTIFIED WAR-SURPLUS, NOT FACTORY EQUIPMENT
7'3" Extended Gross wht.
METERS
FEET
SCALE BAR
WACO AIRPLANES
25'3"
REEL TYPE TRAILING ANTENNA
66"
63"
HAMILTON-STANDARD CONTROLLABLE PITCH PROP.
NC 16592
GROUND ADJUSTABLE TRIM TAB (SOLID BALSAWOOD)
ADJUSTABLE STABILIZER
SERVICE STEP BAR
WHEEL PANTS OPTIONAL
8'3"
9.75"
FAIRING OVER CARB. LINKAGE
13° APPROX.
ALUMINUM FAIRING
STEERABLE TAIL WHEEL THROUGH LINKAGE WITH RUDDER (OPTIONAL)
4°
HISTORICAL AVIATION ALBUM
WACO YKS-6
(1936)
SCALE: 1:48
DRAWN BY: PAUL R. MATT
PLATE 2
© PAUL R. MATT, 1965

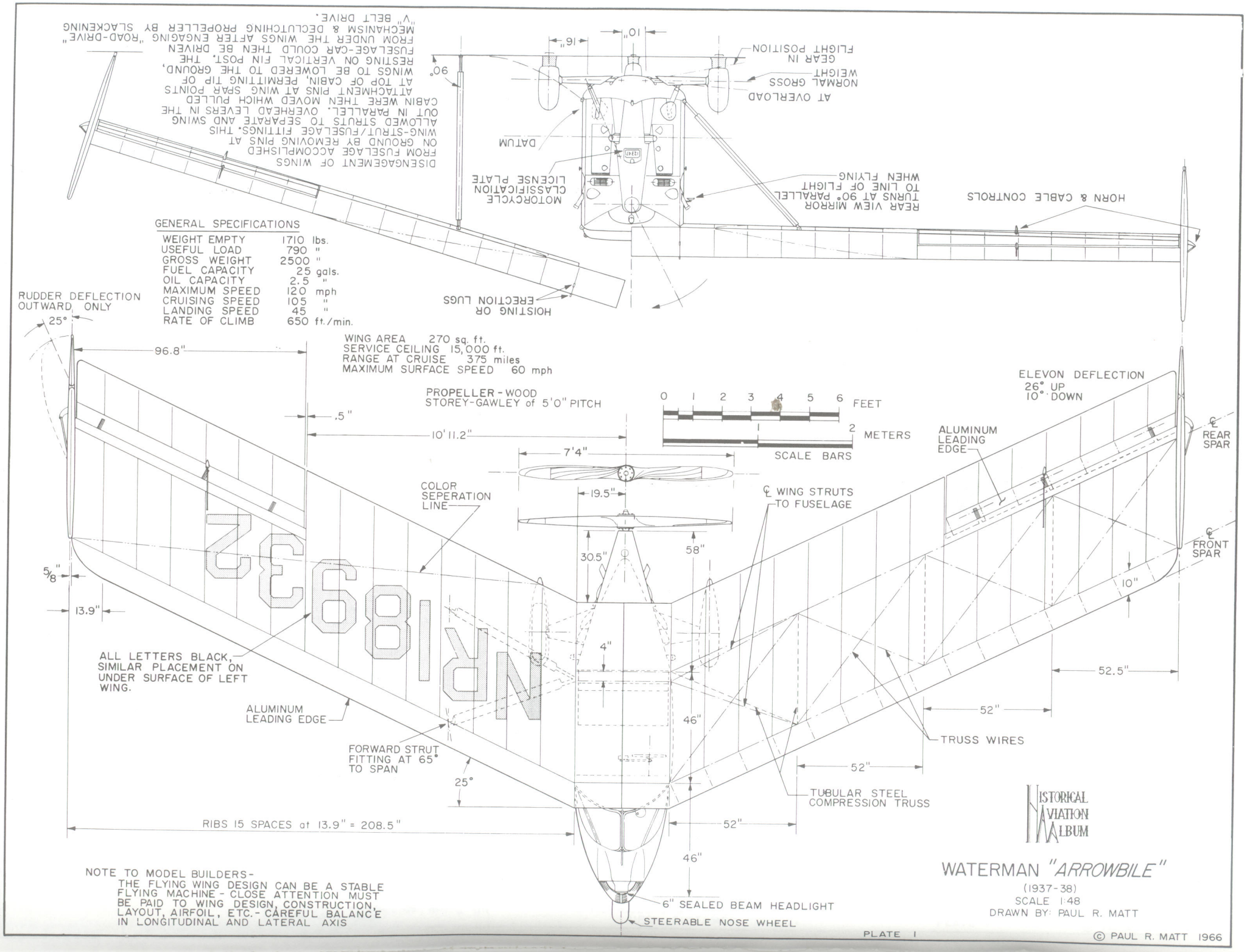
GENERAL SPECIFICATIONS
WEIGHT EMPTY 1710 lbs.
USEFUL LOAD 790 "
GROSS WEIGHT 2500 "
FUEL CAPACITY 25 gals.
OIL CAPACITY 2.5 "
MAXIMUM SPEED 120 mph
CRUISING SPEED 105 "
LANDING SPEED 45 "
RATE OF CLIMB 650 ft./min.
WING AREA 270 sq. ft.
SERVICE CEILING 15,000 ft.
RANGE AT CRUISE 375 miles
MAXIMUM SURFACE SPEED 60 mph
PROPELLER - WOOD
STOREY-GAWLEY of 5'0" PITCH
FEET
METERS
SCALE BARS
RUDDER DEFLECTION OUTWARD ONLY
25°
96.8"
.5"
10'11.2"
7'4"
19.5"
30.5"
58"
4"
46"
46"
52"
52"
52"
52.5"
10"
13.9"
5/8"
16"
10"
90°
DISENGAGEMENT OF WINGS FROM FUSELAGE ACCOMPLISHED ON GROUND BY REMOVING PINS AT WING-STRUT/FUSELAGE FITTINGS. THIS ALLOWED STRUTS TO SEPARATE AND SWING OUT IN PARALLEL. OVERHEAD LEVERS IN THE CABIN WERE THEN MOVED WHICH PULLED ATTACHMENT PINS AT WING SPAR POINTS AT TOP OF CABIN, PERMITTING TIP OF WINGS TO BE LOWERED TO THE GROUND, RESTING ON VERTICAL FIN POST. THE FUSELAGE-CAR COULD THEN BE DRIVEN FROM UNDER THE WINGS AFTER ENGAGING "ROAD-DRIVE" MECHANISM & DECLUTCHING PROPELLER BY SLACKENING "V" BELT DRIVE.
HOISTING OR ERECTION LUGS
DATUM
MOTORCYCLE CLASSIFICATION LICENSE PLATE
REAR VIEW MIRROR TURNS AT 90° PARALLEL TO LINE OF FLIGHT WHEN FLYING
AT OVERLOAD NORMAL GROSS WEIGHT
GEAR IN FLIGHT POSITION
HORN & CABLE CONTROLS
ELEVON DEFLECTION 26° UP 10° DOWN
ALUMINUM LEADING EDGE
℄ REAR SPAR
℄ FRONT SPAR
℄ WING STRUTS TO FUSELAGE
COLOR SEPERATION LINE
ALL LETTERS BLACK, SIMILAR PLACEMENT ON UNDER SURFACE OF LEFT WING.
NR18932
ALUMINUM LEADING EDGE
FORWARD STRUT FITTING AT 65° TO SPAN
TRUSS WIRES
TUBULAR STEEL COMPRESSION TRUSS
RIBS 15 SPACES at 13.9" = 208.5"
6" SEALED BEAM HEADLIGHT
STEERABLE NOSE WHEEL
NOTE TO MODEL BUILDERS-
THE FLYING WING DESIGN CAN BE A STABLE FLYING MACHINE - CLOSE ATTENTION MUST BE PAID TO WING DESIGN, CONSTRUCTION, LAYOUT, AIRFOIL, ETC. - CAREFUL BALANCE IN LONGITUDINAL AND LATERAL AXIS
HISTORICAL AVIATION ALBUM
WATERMAN "ARROWBILE"
(1937-38)
SCALE 1:48
DRAWN BY: PAUL R. MATT
PLATE 1
© PAUL R. MATT 1966

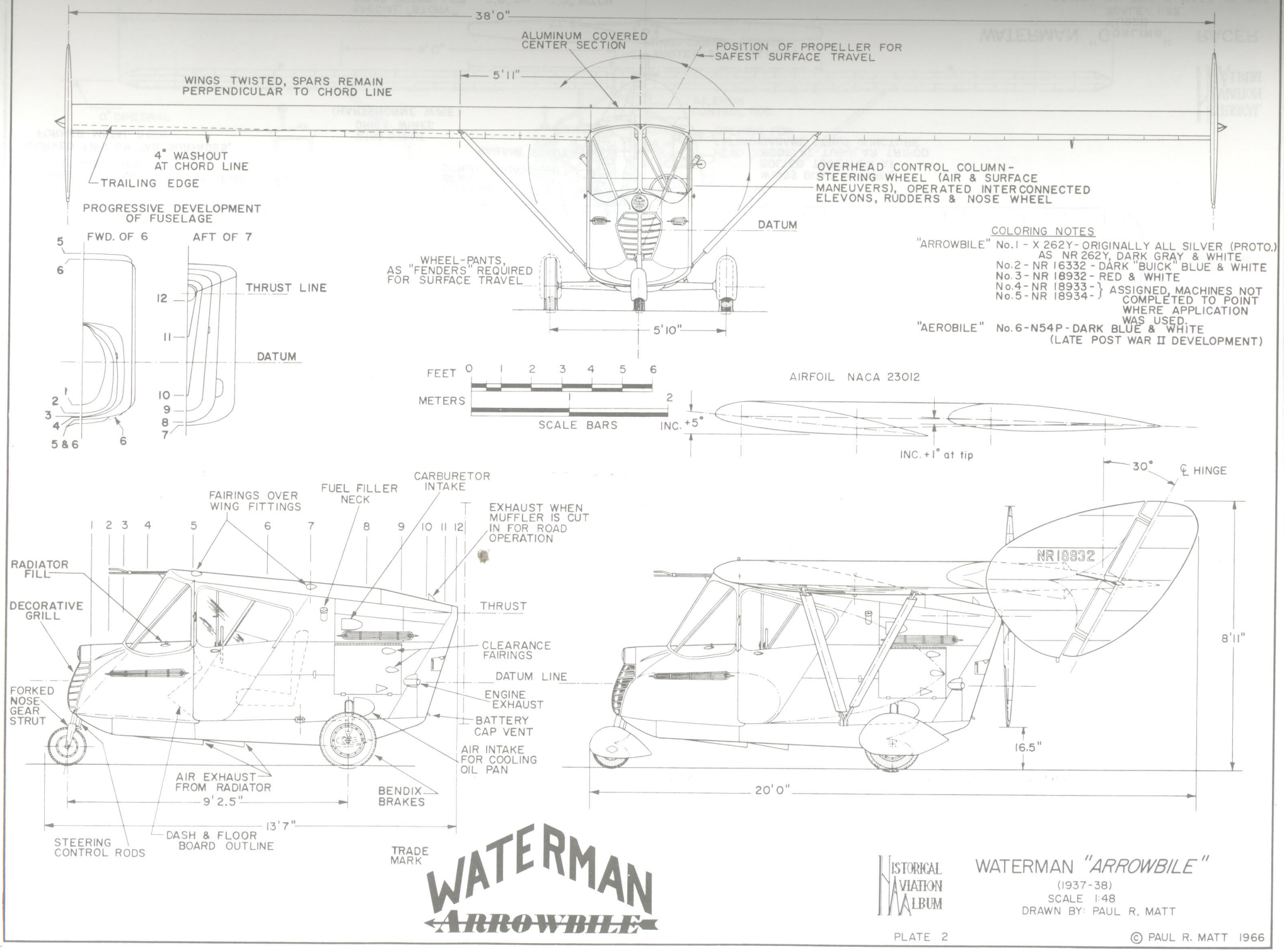
38'0"
ALUMINUM COVERED CENTER SECTION
POSITION OF PROPELLER FOR SAFEST SURFACE TRAVEL
5'11"
WINGS TWISTED, SPARS REMAIN PERPENDICULAR TO CHORD LINE
4° WASHOUT AT CHORD LINE
TRAILING EDGE
OVERHEAD CONTROL COLUMN - STEERING WHEEL (AIR & SURFACE MANEUVERS), OPERATED INTERCONNECTED ELEVONS, RUDDERS & NOSE WHEEL
DATUM
PROGRESSIVE DEVELOPMENT OF FUSELAGE
FWD. OF 6
AFT OF 7
THRUST LINE
DATUM
WHEEL-PANTS, AS "FENDERS" REQUIRED FOR SURFACE TRAVEL
5'10"
COLORING NOTES
"ARROWBILE" No.1 - X 262Y - ORIGINALLY ALL SILVER (PROTO.) AS NR 262Y, DARK GRAY & WHITE
No.2 - NR 16332 - DARK "BUICK" BLUE & WHITE
No.3 - NR 18932 - RED & WHITE
No.4 - NR 18933 - } ASSIGNED, MACHINES NOT COMPLETED TO POINT WHERE APPLICATION WAS USED.
No.5 - NR 18934 - }
"AEROBILE" No.6 - N54P - DARK BLUE & WHITE (LATE POST WAR II DEVELOPMENT)
FEET 0 1 2 3 4 5 6
METERS 1 2
SCALE BARS
AIRFOIL NACA 23012
INC. +5°
INC. +1° at tip
30°
℄ HINGE
NR18932
8'11"
16.5"
20'0"
CARBURETOR INTAKE
FUEL FILLER NECK
FAIRINGS OVER WING FITTINGS
EXHAUST WHEN MUFFLER IS CUT IN FOR ROAD OPERATION
RADIATOR FILL
DECORATIVE GRILL
THRUST
CLEARANCE FAIRINGS
DATUM LINE
ENGINE EXHAUST
FORKED NOSE GEAR STRUT
BATTERY CAP VENT
AIR INTAKE FOR COOLING OIL PAN
AIR EXHAUST FROM RADIATOR
BENDIX BRAKES
9'2.5"
13'7"
STEERING CONTROL RODS
DASH & FLOOR BOARD OUTLINE
TRADE MARK
WATERMAN ARROWBILE
HISTORICAL AVIATION ALBUM
WATERMAN "ARROWBILE"
(1937-38)
SCALE 1:48
DRAWN BY: PAUL R. MATT
PLATE 2
© PAUL R. MATT 1966

GENERAL SPECIFICATIONS

WEIGHT EMPTY	885 lbs.
USEFUL LOAD	245 "
GROSS WEIGHT	1130 "
FUEL CAPACITY	10 gals.
OIL CAPACITY	3 "
SPEED, MAX.	136 mph
LANDING SPEED	60 "
CRUISING SPEED	110 "
WING AREA	112 sq.ft.
WING LOADING	11.1 lbs/sq.ft.
POWER LOADING	12.5 lbs/H.P.
RANGE AT CRUISING	135 miles

COLORING:

FUSELAGE & ALL STRUTS - GLOSS BLACK
WING & TAIL SURFACES - CRIMSON RED
NO LICENSE OR LETTERING EMPLOYED

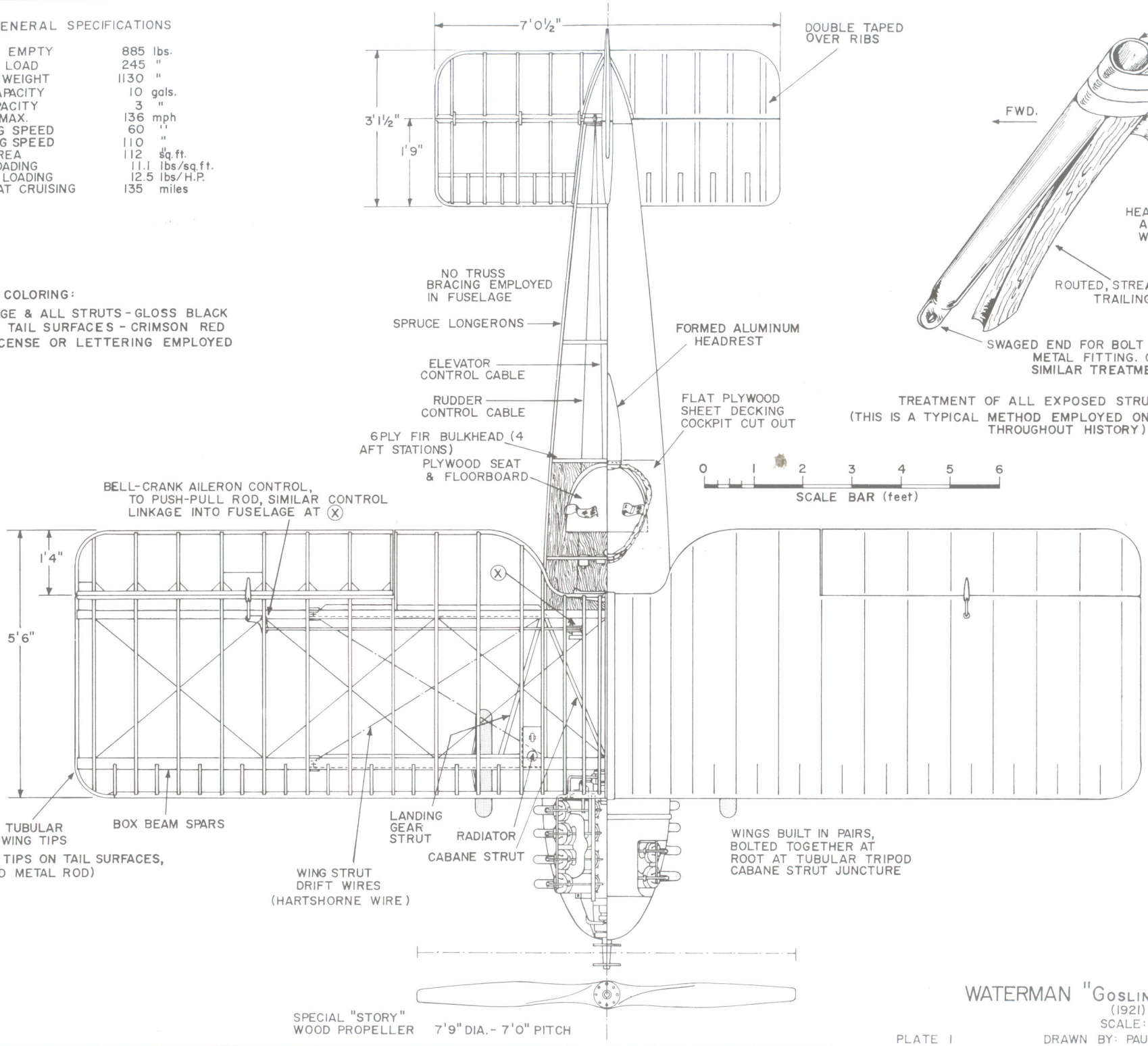

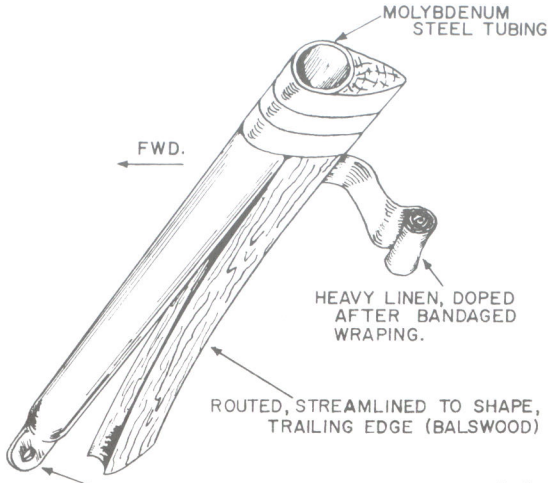

TREATMENT OF ALL EXPOSED STRUTS
(THIS IS A TYPICAL METHOD EMPLOYED ON MANY AIRCRAFT THROUGHOUT HISTORY)

0 1 2 3 4 5 6
SCALE BAR (feet)

HISTORICAL AVIATION ALBUM

WATERMAN "GOSLING" RACER

(1921)

SCALE: 1:32

PLATE I

DRAWN BY: PAUL R. MATT © 1965

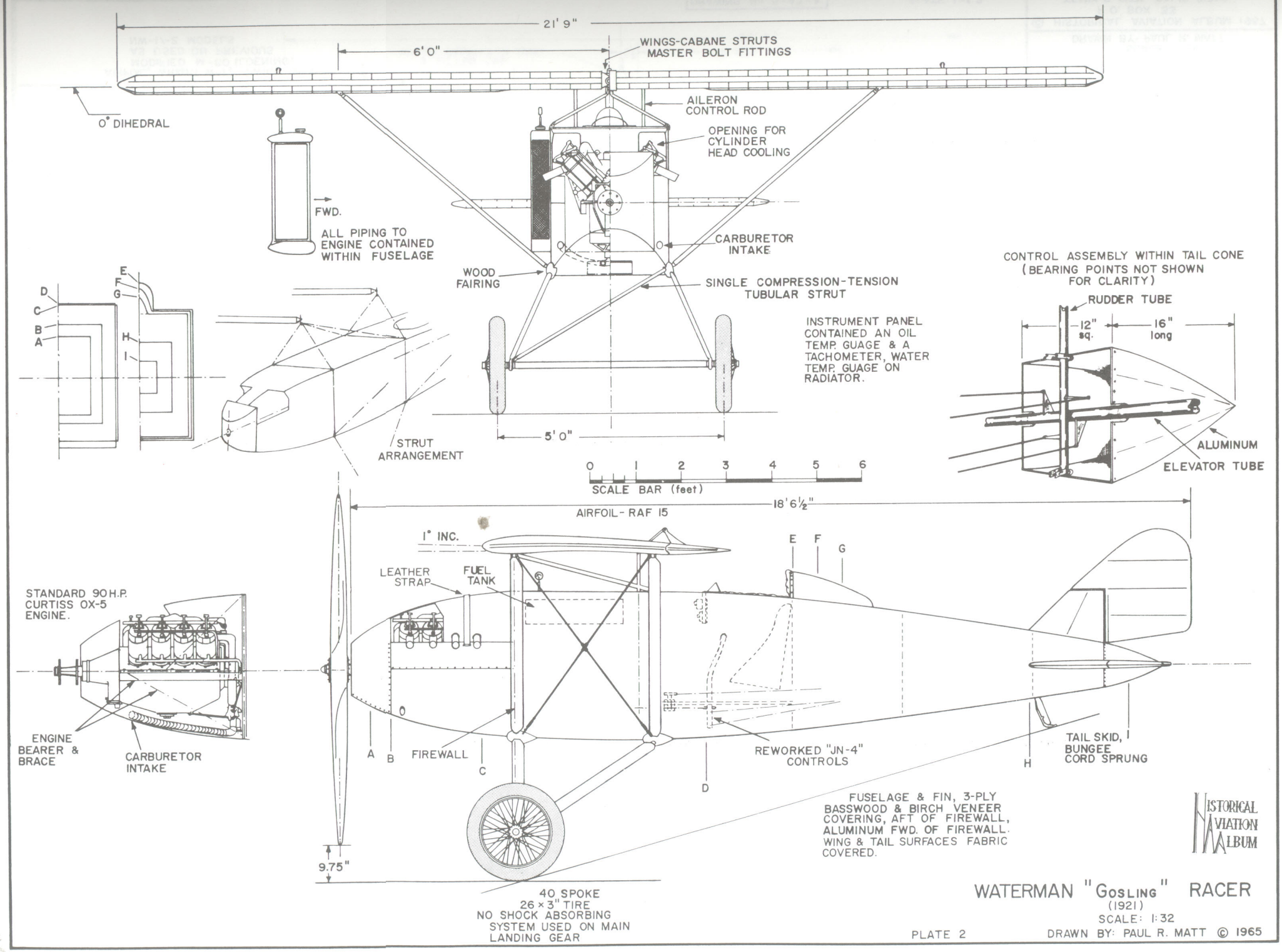
21' 9"
6' 0"
WINGS-CABANE STRUTS
MASTER BOLT FITTINGS
0° DIHEDRAL
AILERON
CONTROL ROD
OPENING FOR
CYLINDER
HEAD COOLING
FWD.
ALL PIPING TO
ENGINE CONTAINED
WITHIN FUSELAGE
CARBURETOR
INTAKE
WOOD
FAIRING
SINGLE COMPRESSION-TENSION
TUBULAR STRUT
INSTRUMENT PANEL
CONTAINED AN OIL
TEMP. GUAGE & A
TACHOMETER, WATER
TEMP. GUAGE ON
RADIATOR.
STRUT
ARRANGEMENT
5' 0"
0 1 2 3 4 5 6
SCALE BAR (feet)
CONTROL ASSEMBLY WITHIN TAIL CONE
(BEARING POINTS NOT SHOWN
FOR CLARITY)
RUDDER TUBE
12" sq.
16" long
ALUMINUM
ELEVATOR TUBE
18' 6½"
AIRFOIL - RAF 15
1° INC.
LEATHER
STRAP
FUEL
TANK
STANDARD 90 H.P.
CURTISS OX-5
ENGINE.
ENGINE
BEARER &
BRACE
CARBURETOR
INTAKE
FIREWALL
REWORKED "JN-4"
CONTROLS
TAIL SKID,
BUNGEE
CORD SPRUNG
FUSELAGE & FIN, 3-PLY
BASSWOOD & BIRCH VENEER
COVERING, AFT OF FIREWALL,
ALUMINUM FWD. OF FIREWALL.
WING & TAIL SURFACES FABRIC
COVERED.
9.75"
40 SPOKE
26 × 3" TIRE
NO SHOCK ABSORBING
SYSTEM USED ON MAIN
LANDING GEAR
HISTORICAL AVIATION ALBUM
WATERMAN "GOSLING" RACER
(1921)
SCALE: 1:32
PLATE 2
DRAWN BY: PAUL R. MATT © 1965

GENERAL SPECIFICATIONS, F2W-I A-6744

WEIGHT EMPTY	2468 lbs.
USEFULL LOAD	618 lbs. (not incl. water)
GROSS WEIGHT	3086 lbs.
MAXIMUM SPEED	247.7 m.p.h.
LANDING SPEED	75 m.p.h. approx.
FUEL CAPACITY	60 gals.
	31.7 gals. A-6743
OIL CAPACITY	6.4 gals.
WATER CAPACITY	8.0 gals.
WING AREA (TOTAL)	174 sq. ft., incl. ailerons
WING LOADING	16.4 lbs./sq. ft.
POWER LOADING	3.81 lbs./h.p. (ALL UP WEIGHT)

POWER - WRIGHT T-3, S/N 6372, 750 h.p. max. at 2200 r.p.m., SPECIAL 6.5 to 1 HIGH COMPRESSION ENGINE, 5.75" BORE, 6.25" STROKE, 1947 cu. in. DISPLACEMENT

COLORING NOTES

FUSELAGE & NOSE SPINNER - FIRE ENGINE RED
WINGS, OTHER THAN RADIATORS, TAIL SURFACES, LANDING GEAR STRUTS, INTERPLANE STRUTS - GLOSS WHITE

RACING No. 8 - WHITE
LETTERING ON RUDDER - BLACK
WING RADIATORS - RUSTIC BRASS

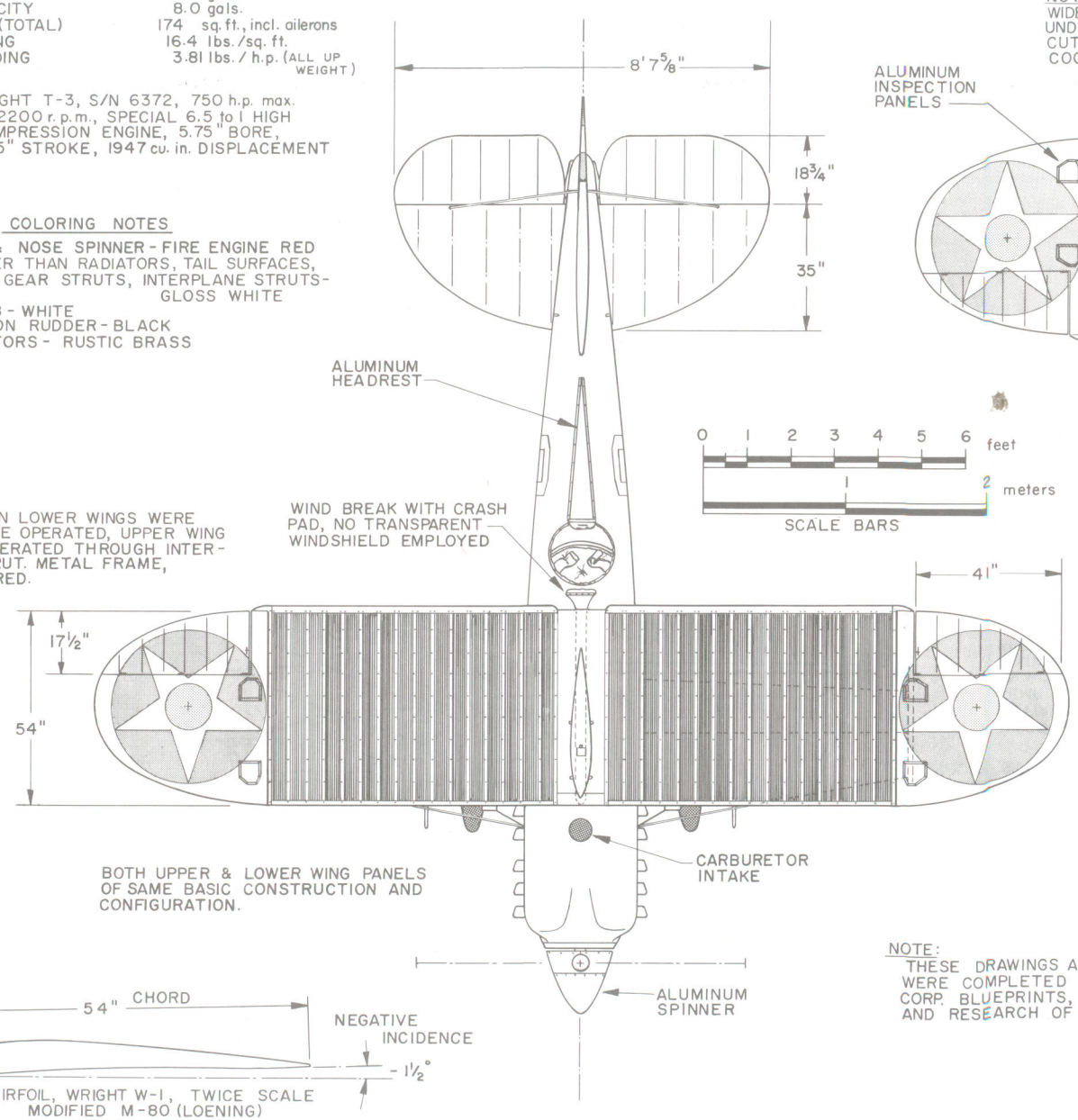

AILERONS ON LOWER WINGS WERE TORQUE TUBE OPERATED, UPPER WING AILERONS OPERATED THROUGH INTER-AILERON STRUT. METAL FRAME, LINEN COVERED.

BOTH UPPER & LOWER WING PANELS OF SAME BASIC CONSTRUCTION AND CONFIGURATION.

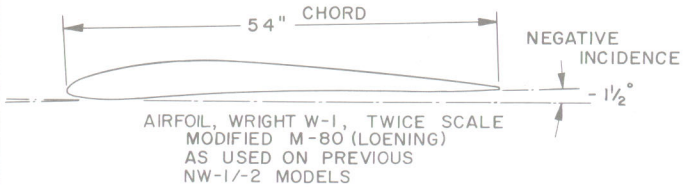

AIRFOIL, WRIGHT W-1, TWICE SCALE MODIFIED M-80 (LOENING) AS USED ON PREVIOUS NW-1/-2 MODELS

NOTE:
WIDE AIRFOIL SHAPED 'LIFTING' UNDERCARRIAGE SPREADER BAR CUT A WAY TO SHOW OIL COOLING RADIATOR.

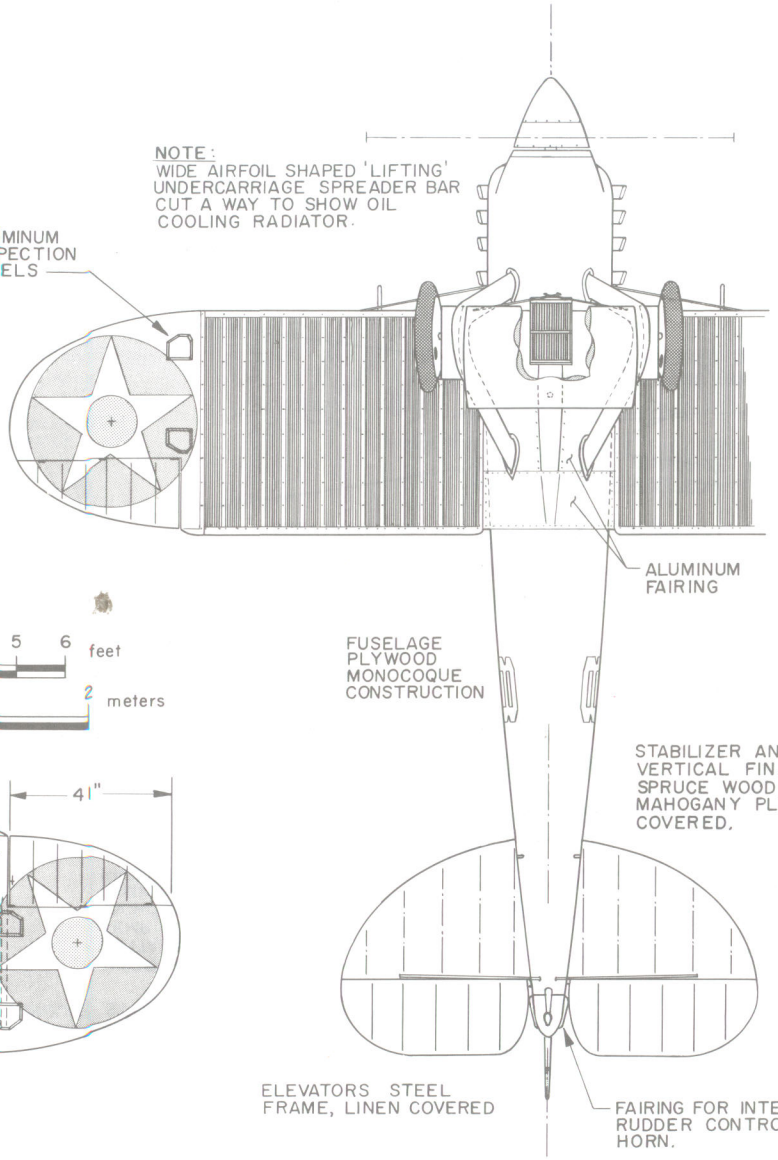

NOTE:
THESE DRAWINGS AND THE COMPANION F2W-2 MODEL WERE COMPLETED FROM ORIGINAL WRIGHT AERONAUTICAL CORP. BLUEPRINTS, 6A 100 SERIES, THROUGH THE COOPERATION AND RESEARCH OF THOMAS G. FOXWORTH

WRIGHT F2W-I RACER

1923
SCALE - 1:24
DRAWN BY - PAUL R. MATT

© HISTORICAL AVIATION ALBUM 1967
P. O. BOX 33
TEMPLE CITY, CALIF. 91780

DRAWING No. 5-43-A

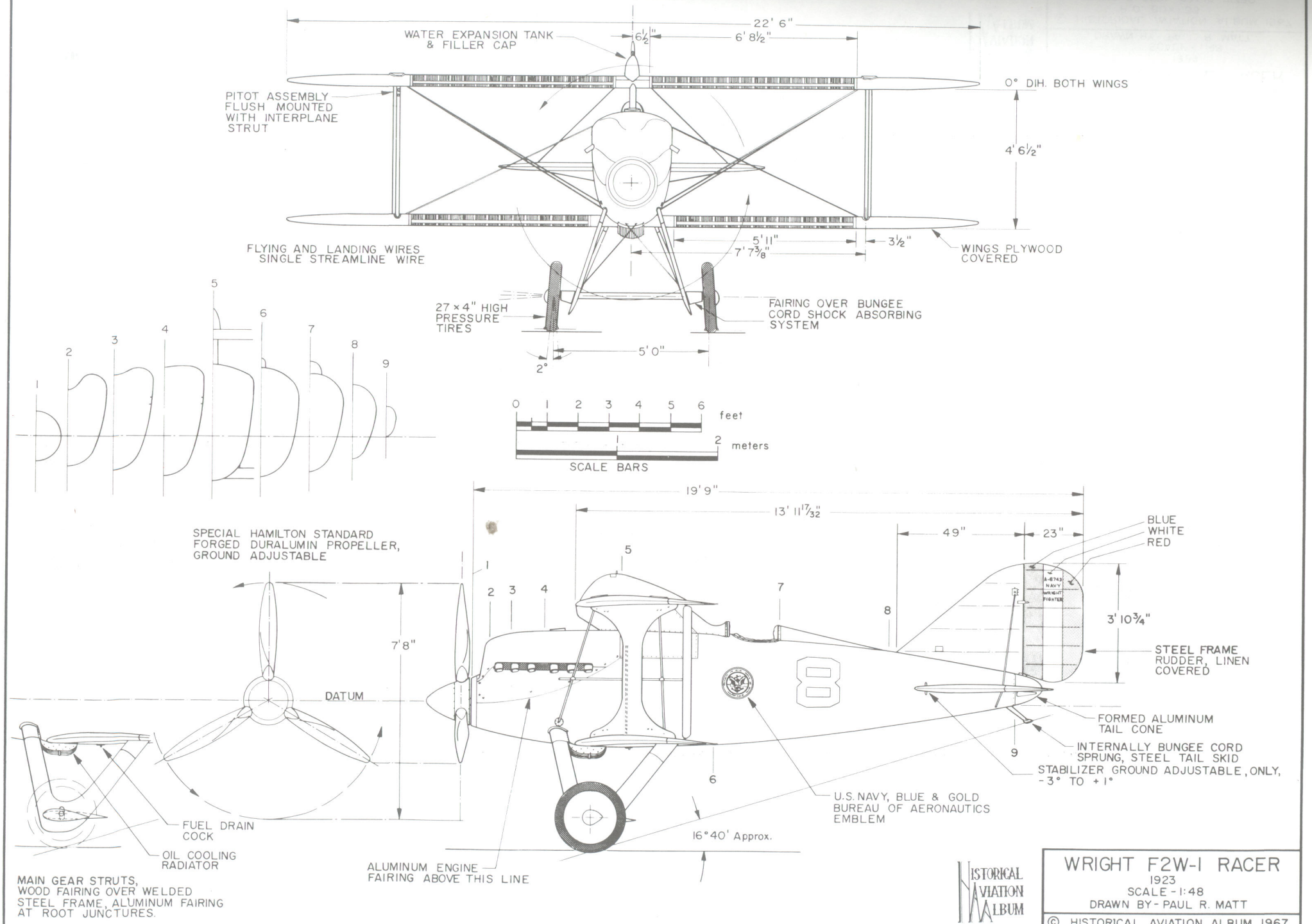
22' 6"
WATER EXPANSION TANK & FILLER CAP
6½"
6' 8½"
0° DIH. BOTH WINGS
PITOT ASSEMBLY FLUSH MOUNTED WITH INTERPLANE STRUT
4' 6½"
FLYING AND LANDING WIRES SINGLE STREAMLINE WIRE
5' 11"
7' 7⅜"
3½"
WINGS PLYWOOD COVERED
27 × 4" HIGH PRESSURE TIRES
FAIRING OVER BUNGEE CORD SHOCK ABSORBING SYSTEM
5' 0"
2°
1 2 3 4 5 6 7 8 9
0 1 2 3 4 5 6 feet
1 2 meters
SCALE BARS
19' 9"
13' 11 17/32"
49"
23"
BLUE
WHITE
RED
SPECIAL HAMILTON STANDARD FORGED DURALUMIN PROPELLER, GROUND ADJUSTABLE
7' 8"
DATUM
3' 10¾"
STEEL FRAME RUDDER, LINEN COVERED
FORMED ALUMINUM TAIL CONE
INTERNALLY BUNGEE CORD SPRUNG, STEEL TAIL SKID
STABILIZER GROUND ADJUSTABLE, ONLY, -3° TO +1°
U.S. NAVY, BLUE & GOLD BUREAU OF AERONAUTICS EMBLEM
16° 40' Approx.
FUEL DRAIN COCK
OIL COOLING RADIATOR
ALUMINUM ENGINE FAIRING ABOVE THIS LINE
MAIN GEAR STRUTS, WOOD FAIRING OVER WELDED STEEL FRAME, ALUMINUM FAIRING AT ROOT JUNCTURES.
HISTORICAL AVIATION ALBUM
WRIGHT F2W-1 RACER
1923
SCALE - 1:48
DRAWN BY - PAUL R. MATT
© HISTORICAL AVIATION ALBUM 1967
P. O. BOX 33
TEMPLE CITY, CALIF. 91780
DRAWING No. 5-43-A
PLATE 2 of 2

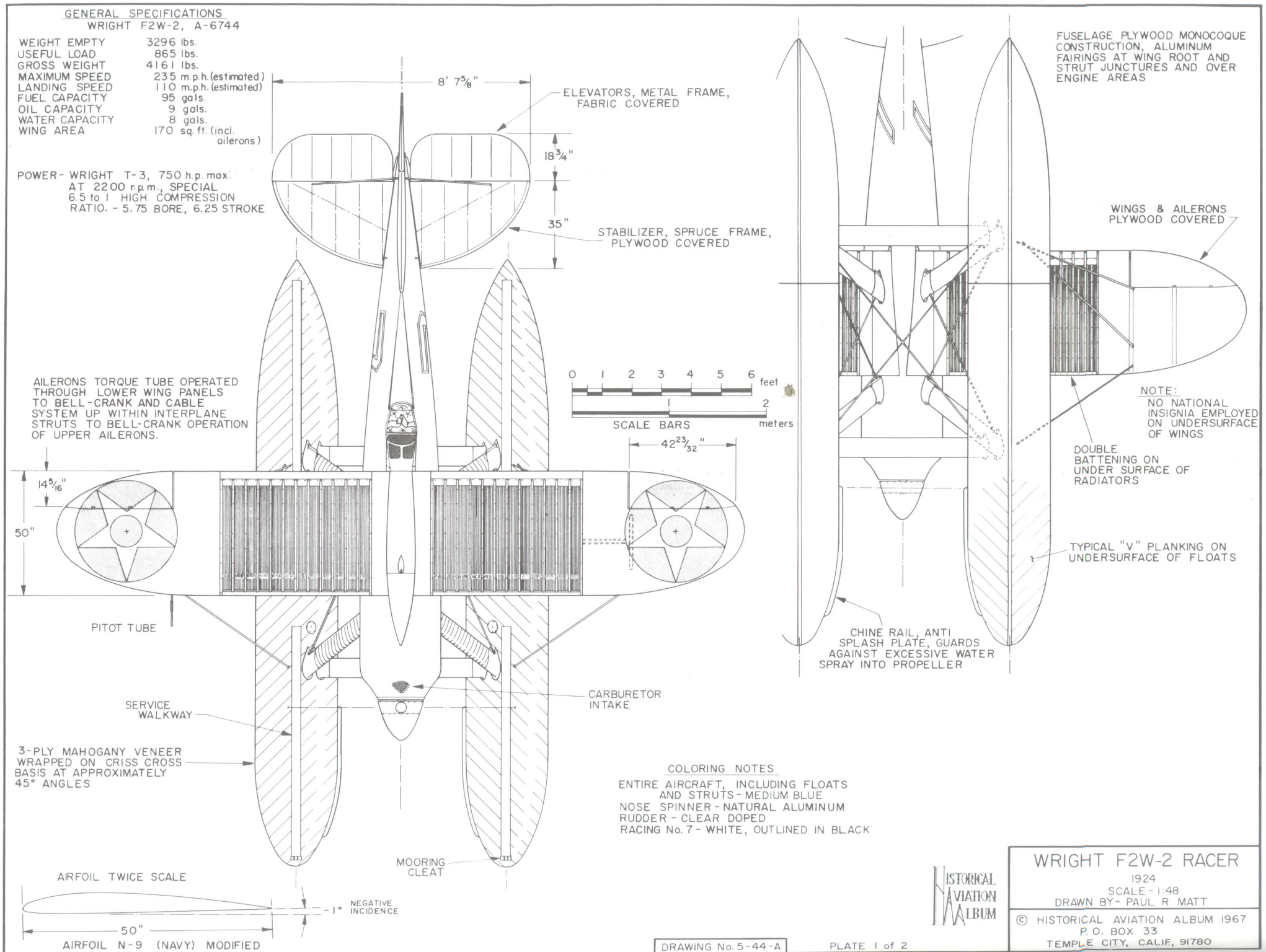
GENERAL SPECIFICATIONS
WRIGHT F2W-2, A-6744
WEIGHT EMPTY 3296 lbs.
USEFUL LOAD 865 lbs.
GROSS WEIGHT 4161 lbs.
MAXIMUM SPEED 235 m.p.h. (estimated)
LANDING SPEED 110 m.p.h. (estimated)
FUEL CAPACITY 95 gals.
OIL CAPACITY 9 gals.
WATER CAPACITY 8 gals.
WING AREA 170 sq. ft. (incl. ailerons)
POWER - WRIGHT T-3, 750 h.p. max. AT 2200 r.p.m., SPECIAL 6.5 to 1 HIGH COMPRESSION RATIO. - 5.75 BORE, 6.25 STROKE
8' 7 5/8"
ELEVATORS, METAL FRAME, FABRIC COVERED
18 3/4"
35"
STABILIZER, SPRUCE FRAME, PLYWOOD COVERED
AILERONS TORQUE TUBE OPERATED THROUGH LOWER WING PANELS TO BELL-CRANK AND CABLE SYSTEM UP WITHIN INTERPLANE STRUTS TO BELL-CRANK OPERATION OF UPPER AILERONS.
14 5/16"
50"
42 23/32"
0 1 2 3 4 5 6 feet
1 2 meters
SCALE BARS
PITOT TUBE
SERVICE WALKWAY
3-PLY MAHOGANY VENEER WRAPPED ON CRISS CROSS BASIS AT APPROXIMATELY 45° ANGLES
CARBURETOR INTAKE
MOORING CLEAT
AIRFOIL TWICE SCALE
- 1° NEGATIVE INCIDENCE
50"
AIRFOIL N-9 (NAVY) MODIFIED
FUSELAGE PLYWOOD MONOCOQUE CONSTRUCTION, ALUMINUM FAIRINGS AT WING ROOT AND STRUT JUNCTURES AND OVER ENGINE AREAS
WINGS & AILERONS PLYWOOD COVERED
NOTE:
NO NATIONAL INSIGNIA EMPLOYED ON UNDERSURFACE OF WINGS
DOUBLE BATTENING ON UNDER SURFACE OF RADIATORS
TYPICAL "V" PLANKING ON UNDERSURFACE OF FLOATS
CHINE RAIL, ANTI SPLASH PLATE, GUARDS AGAINST EXCESSIVE WATER SPRAY INTO PROPELLER
COLORING NOTES
ENTIRE AIRCRAFT, INCLUDING FLOATS AND STRUTS - MEDIUM BLUE
NOSE SPINNER - NATURAL ALUMINUM
RUDDER - CLEAR DOPED
RACING No. 7 - WHITE, OUTLINED IN BLACK
HISTORICAL AVIATION ALBUM
WRIGHT F2W-2 RACER
1924
SCALE - 1:48
DRAWN BY - PAUL R. MATT
© HISTORICAL AVIATION ALBUM 1967
P.O. BOX 33
TEMPLE CITY, CALIF. 91780
DRAWING No. 5-44-A
PLATE 1 of 2

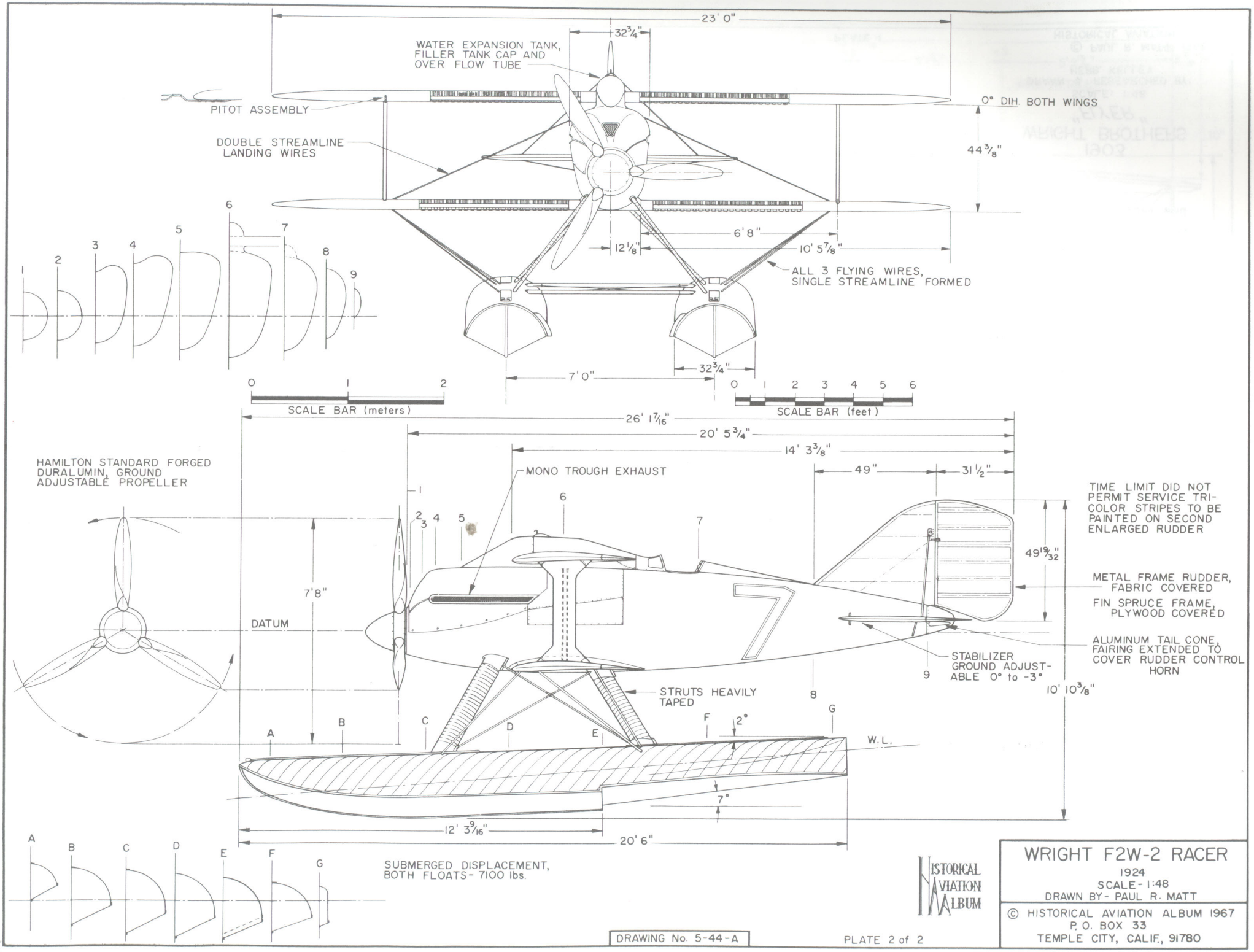
23' 0"
32 3/4"
WATER EXPANSION TANK, FILLER TANK CAP AND OVER FLOW TUBE
PITOT ASSEMBLY
0° DIH. BOTH WINGS
DOUBLE STREAMLINE LANDING WIRES
44 3/8"
6' 8"
12 1/8"
10' 5 7/8"
ALL 3 FLYING WIRES, SINGLE STREAMLINE FORMED
7' 0"
32 3/4"
SCALE BAR (meters)
SCALE BAR (feet)
26' 1 7/16"
20' 5 3/4"
14' 3 3/8"
HAMILTON STANDARD FORGED DURALUMIN, GROUND ADJUSTABLE PROPELLER
MONO TROUGH EXHAUST
49"
31 1/2"
TIME LIMIT DID NOT PERMIT SERVICE TRI-COLOR STRIPES TO BE PAINTED ON SECOND ENLARGED RUDDER
49 19/32"
METAL FRAME RUDDER, FABRIC COVERED
FIN SPRUCE FRAME, PLYWOOD COVERED
7' 8"
DATUM
ALUMINUM TAIL CONE, FAIRING EXTENDED TO COVER RUDDER CONTROL HORN
STABILIZER GROUND ADJUSTABLE 0° to -3°
STRUTS HEAVILY TAPED
10' 10 3/8"
2°
W.L.
7°
12' 3 9/16"
20' 6"
SUBMERGED DISPLACEMENT, BOTH FLOATS - 7100 lbs.
HISTORICAL AVIATION ALBUM
WRIGHT F2W-2 RACER
1924
SCALE - 1:48
DRAWN BY - PAUL R. MATT
© HISTORICAL AVIATION ALBUM 1967
P. O. BOX 33
TEMPLE CITY, CALIF., 91780
DRAWING No. 5-44-A
PLATE 2 of 2

GENERAL SPECIFICATIONS

WINGSPAN	40' 4"
LENGTH	21' 1"
WING AREA	510 sq. ft.
GROSS WEIGHT	750 lbs.
WING LOADING	1.47 lbs/sq. ft.

WRIGHT 4 CYLINDER WATER COOLED ENGINE
BORE 4"
STROKE 4"
POWER, INITIAL 12 H.P.
WEIGHT 160 lbs. dry

SEWED SEAM LINE CODE
LOWER WING SEAM
UPPER WING SEAM

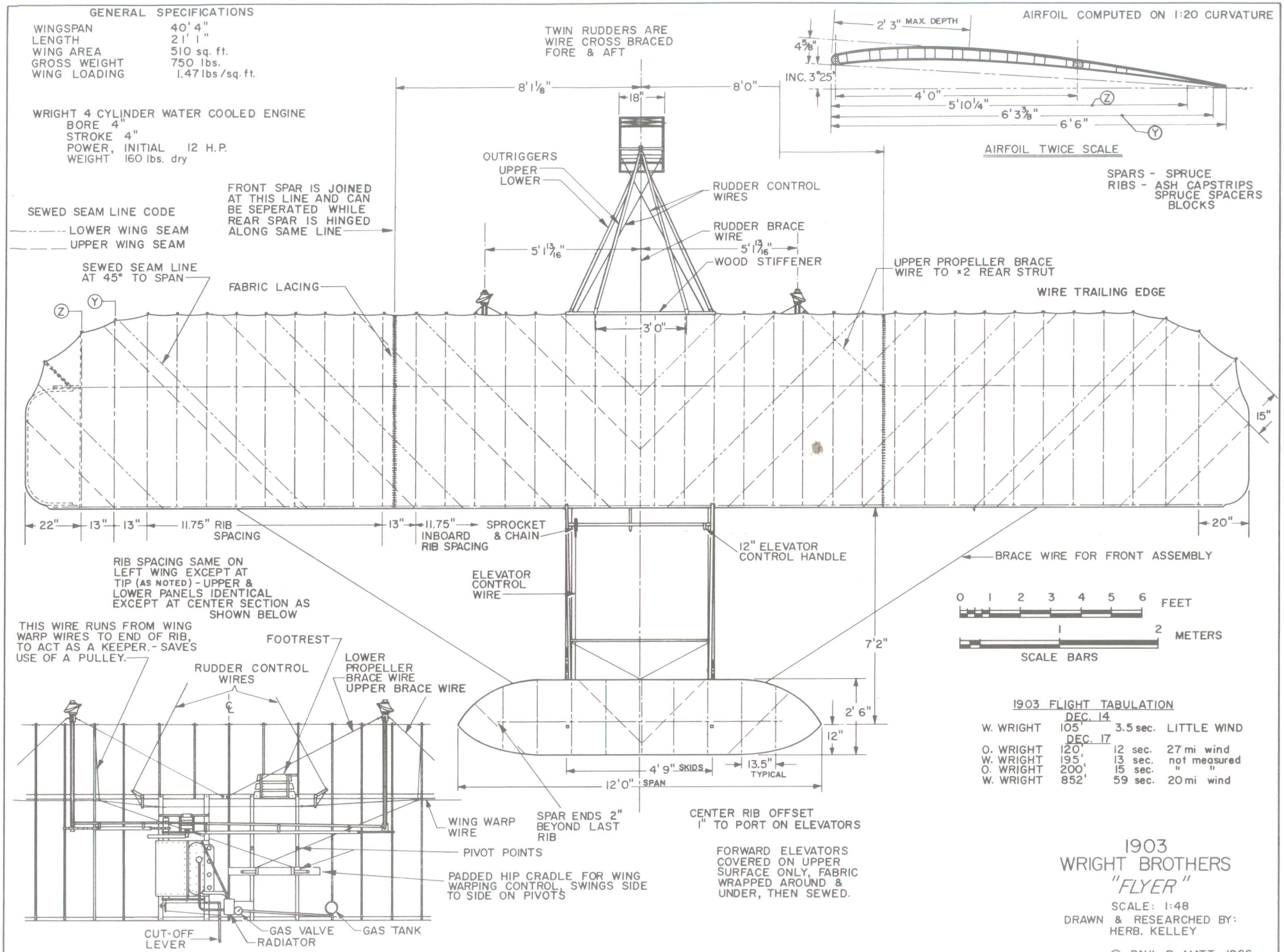

1903 FLIGHT TABULATION

DEC. 14			
W. WRIGHT	105'	3.5 sec.	LITTLE WIND
DEC. 17			
O. WRIGHT	120'	12 sec.	27 mi wind
W. WRIGHT	195'	13 sec.	not measured
O. WRIGHT	200'	15 sec.	" "
W. WRIGHT	852'	59 sec.	20 mi wind

1903 WRIGHT BROTHERS "FLYER"

SCALE: 1:48

DRAWN & RESEARCHED BY: HERB. KELLEY

© PAUL R. MATT 1966
HISTORICAL AVIATION ALBUM

PLATE I

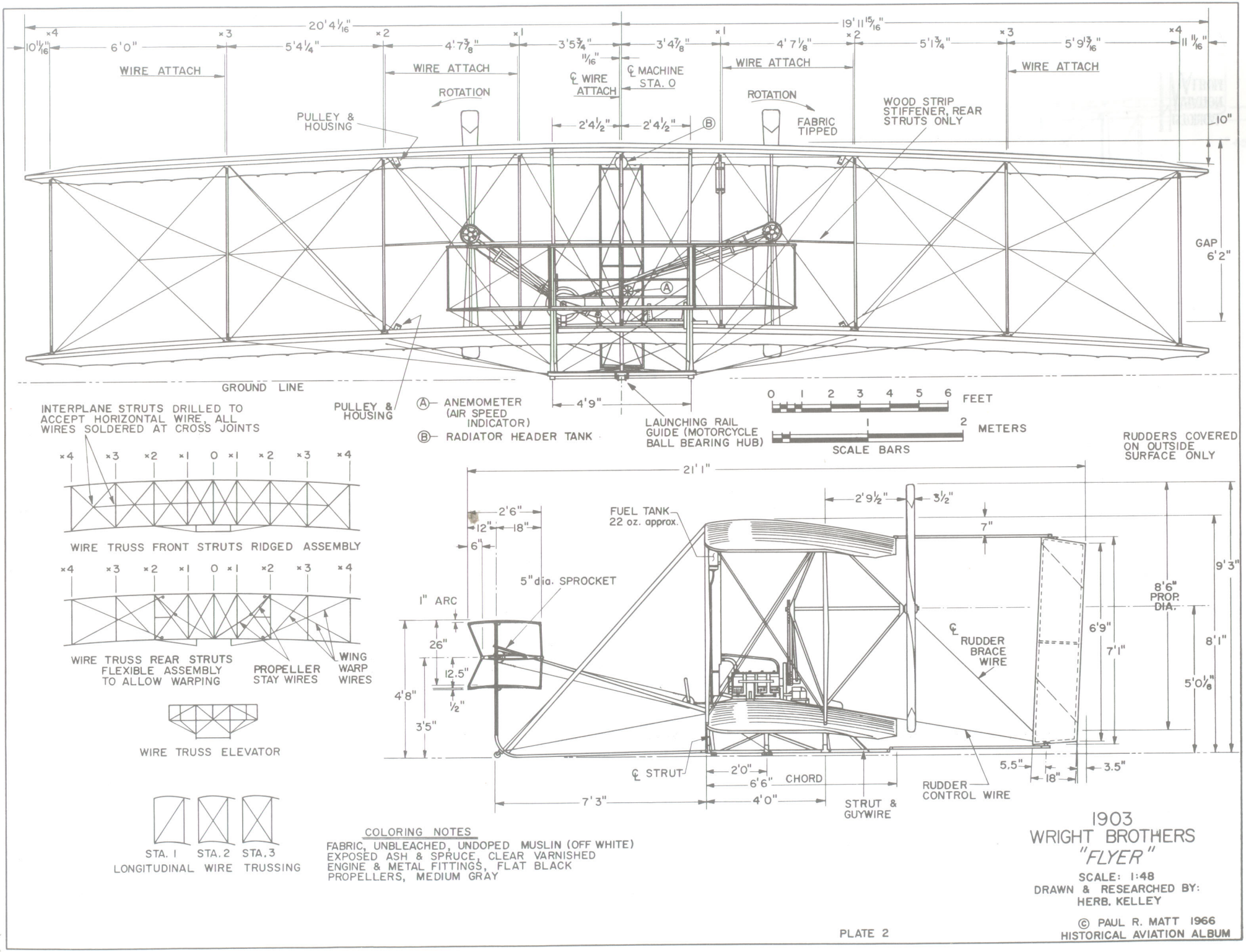
20'4 1/16"
19'11 15/16"
10 11/16"
6'0"
5'4 1/4"
4'7 3/8"
3'5 3/4"
11/16"
3'4 7/8"
4'7 1/8"
5'1 3/4"
5'9 13/16"
11 1/16"
WIRE ATTACH
WIRE ATTACH
℄ WIRE ATTACH
℄ MACHINE STA. 0
WIRE ATTACH
WIRE ATTACH
ROTATION
ROTATION
PULLEY & HOUSING
2'4 1/2"
2'4 1/2"
FABRIC TIPPED
WOOD STRIP STIFFENER, REAR STRUTS ONLY
10"
GAP 6'2"
GROUND LINE
PULLEY & HOUSING
Ⓐ- ANEMOMETER (AIR SPEED INDICATOR)
Ⓑ- RADIATOR HEADER TANK
4'9"
LAUNCHING RAIL GUIDE (MOTORCYCLE BALL BEARING HUB)
0 1 2 3 4 5 6 FEET
1 2 METERS
SCALE BARS
INTERPLANE STRUTS DRILLED TO ACCEPT HORIZONTAL WIRE, ALL WIRES SOLDERED AT CROSS JOINTS
WIRE TRUSS FRONT STRUTS RIDGED ASSEMBLY
WIRE TRUSS REAR STRUTS FLEXIBLE ASSEMBLY TO ALLOW WARPING
PROPELLER STAY WIRES
WING WARP WIRES
WIRE TRUSS ELEVATOR
STA. 1 STA. 2 STA. 3
LONGITUDINAL WIRE TRUSSING
RUDDERS COVERED ON OUTSIDE SURFACE ONLY
21'1"
2'6"
12"
18"
6"
FUEL TANK 22 oz. approx.
2'9 1/2"
3 1/2"
7"
5" dia. SPROCKET
1" ARC
26"
12.5"
1/2"
4'8"
3'5"
℄ RUDDER BRACE WIRE
6'9"
7'1"
8'6" PROP. DIA.
9'3"
8'1"
5'0 1/8"
℄ STRUT
2'0"
6'6" CHORD
7'3"
4'0"
STRUT & GUYWIRE
RUDDER CONTROL WIRE
5.5"
18"
3.5"
COLORING NOTES
FABRIC, UNBLEACHED, UNDOPED MUSLIN (OFF WHITE)
EXPOSED ASH & SPRUCE, CLEAR VARNISHED
ENGINE & METAL FITTINGS, FLAT BLACK
PROPELLERS, MEDIUM GRAY
1903
WRIGHT BROTHERS
"FLYER"
SCALE: 1:48
DRAWN & RESEARCHED BY: HERB. KELLEY
© PAUL R. MATT 1966
HISTORICAL AVIATION ALBUM
PLATE 2

GENERAL SPECIFICATIONS

WEIGHT EMPTY	1725 lbs
USEFUL LOAD	595 "
GROSS WEIGHT	2320 "
ENDURANCE AT CRUISE-63mph	6 hrs
WING AREA (AILERONS EXCLUDED)	430 sq. ft.
AREA OF AILERONS (4)	64.6 sq. ft.
WING LOADING	5.86 lbs/sq. ft.
POWER LOADING	16.86 " " "
TOP SPEED	90 mph

MAIN CONSTRUCTION,
ASH, SPRUCE & POPLAR,
LINEN COVERED & DOPED

SECTIONS BELOW, TWICE SCALE

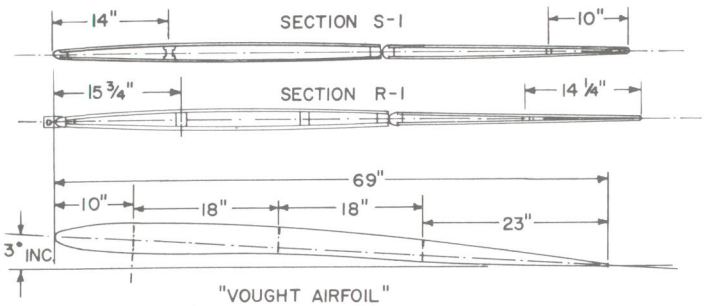

"VOUGHT AIRFOIL"
(MODIFIED RAF-15)
3-SPAR WING CELLULE, CENTER SPAR (FALSE) NON-BEARING

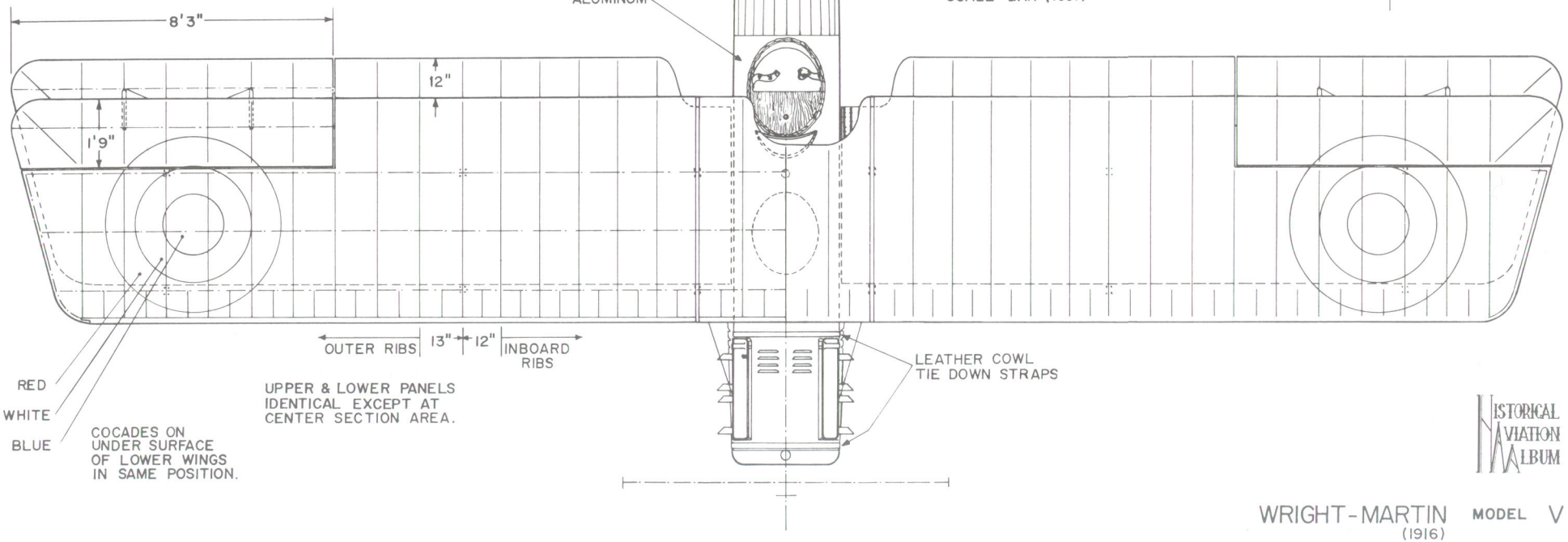

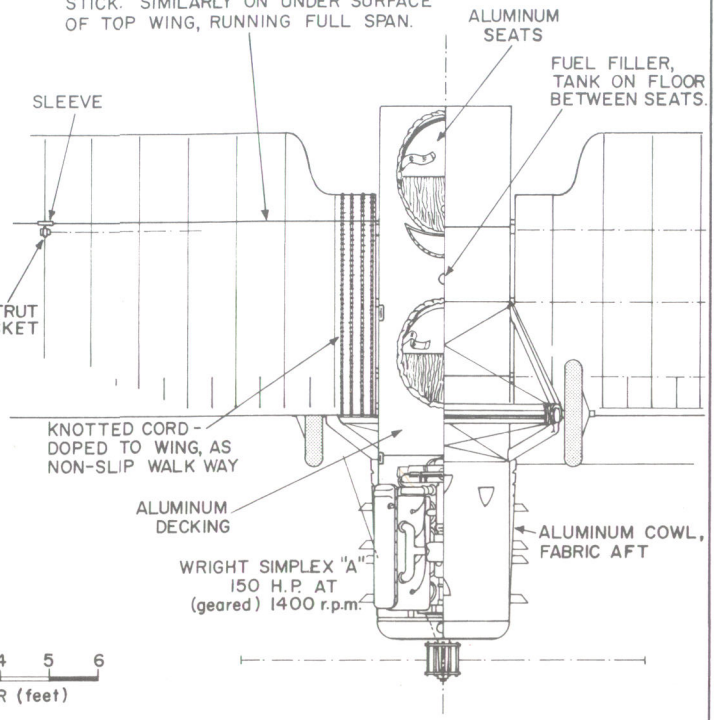

0 1 2 3 4 5 6
SCALE BAR (feet)

HISTORICAL AVIATION ALBUM

WRIGHT-MARTIN MODEL V
(1916)

SCALE : 1:48

PLATE 1

DRAWN BY: PAUL R. MATT © 1965

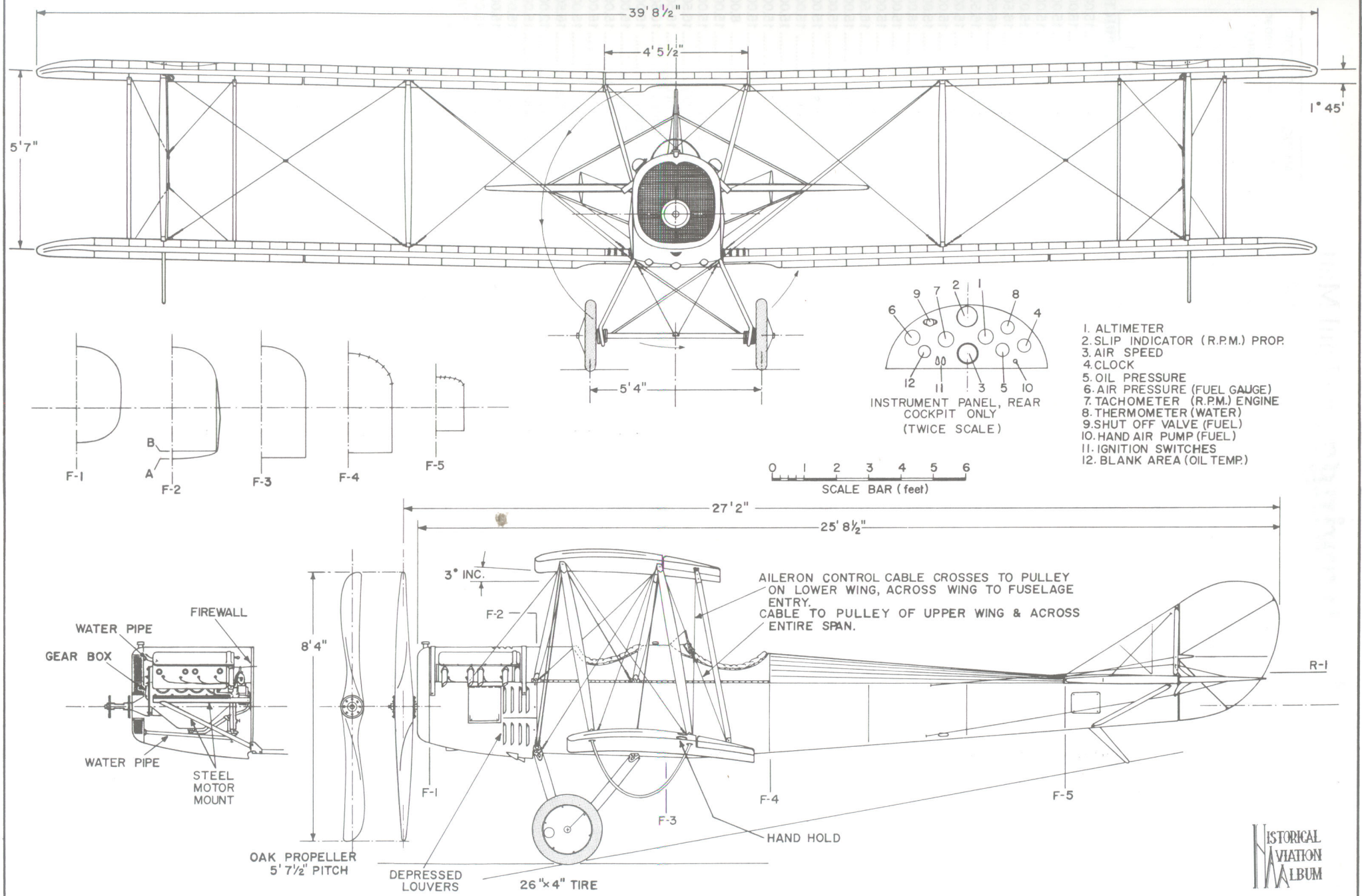

ENTIRE AIRCRAFT - CLEAR DOPED
ALUMINUM AREAS - NATURAL

HISTORICAL AVIATION ALBUM

WRIGHT-MARTIN MODEL V

(1916)

SCALE: 1:48

PLATE 2

DRAWN BY: PAUL R. MATT © 1965

3-View Scale Drawings by Paul Matt

Volume 1 contains all airplanes listed from A through G. Volume 2 contains all airplanes listed from H through W. If you would like individual, large sheets of any of the below listed scale drawings, send request, catalog #, appropriate fee, and shipping charge of $3.95. If you want your drawing rolled in a tube — add $4.00. Clear, concise, uncluttered 3- and 4- view engineering presentations, in large (17" x 22"), easy to work with standard scales. Drawing is highly detailed and is an accurate working print with all dimensions, specifications, airfoils, cross sections, templates, and color scheme included. These drawings are part of the collection of the internationally acclaimed and highly honored ***Historical Aviation Album.*** All orders are folded unless a tube is ordered. Each has 2 to 6 large sheets. **Rolled in tube — add $4.00 plus $3.95 postage. Send to: Aviation Heritage, P.O. Box 665, Destin, FL 32540.**

DRAWING SCALE CODE:
Last letter of catalog number indicates scale of drawing.

A= 1:24 .... 1/2"= 1'
B= 1:16.....3/4"= 1'
C= 1:48 .... 1/4"= 1'
D= 1:32 .... 3/8"= 1'
E= 1:8.....1 1/2"= 1'
F= 1:6 ..... 2"= 1'
G= 1:96 .... 1/8"= 1'

VOLUME 1 CONTENTS:

		RETAIL PRICE
_ Aeromarine 39B	(#9-78A, 3 shts.)	$16.50
_ Aeronca 7AC "Champion"	(#AM-41A, 2 shts.)	15.00
_ Aeronca C-2	(#10-80A, 2 shts.)	15.00
_ Aeronca C-3 "Collegian"	(#10-81A, 2 shts.)	15.00
_ Aeronca C-3 "Master"	(#10-82A, 2 shts.)	15.00
_ Aeronca K	(#15-103A, 2 shts.)	15.00
_ Aeronca LB "Low wing"	(#AM-60A, 2 shts.)	15.00
_ Alcor C.6.1 Jr. Transport	(#4-33D, 2 shts.)	15.00
_ Anderson-Greenwood AG-14	(#12-94A, 2 shts.)	15.00
_ Beechcraft D-18S Twin	(#6-59A, 3 shts.)	16.50
_ Bell P-39Q "Airacobra"	(#1-7A, 2 shts.)	15.00
_ Berkmans "Speed Scout"	(#2-12B, 2 shts.)	15.00
_ Berliner-Joyce OJ-2	(#AM-48A, 2 shts.)	15.00
_ Berliner-Joyce XF3J-1	(#15-104A, 2 shts.)	15.00
_ Boeing 307 "Stratoliner"	(#7-63C, 2 shts.)	15.00
_ Boeing F3B-1	(#AM-56A, 2 shts.)	15.00
_ Boeing XF7B-1	(#AM-38A, 2 shts.)	15.00
_ Brewster F2A-3 "Buffalo"	(#5-47A, 2 shts.)	15.00
_ Cessna 120/140	(#1-9A, 2 shts.)	15.00
_ Cessna C-37 "Airmaster"	(#6-50A, 2 shts.)	15.00
_ Cessna T-50 "Bobcat"	(#17-115A, 2 shts.)	15.00
_ Consolidated P2Y-2	(#9-71C,3 shts.)	16.50
_ Consolidated PBY-5A "Catalina"	(#17-114C, 3 shts.)	18.00
_ Curtiss "Carrier Pigeon I"	(#2-15A, 2 shts.)	15.00
_ Curtiss 1st Milit. Tract. S.C. No. 21/22 1913.	(#6-55A, 2 shts.)	15.00
_ Curtiss A-3B "Falcon"	(#AM-39A, 2 shts.)	15.00
_ Curtiss AT-9 "Jeep"	(#2-18A, 2 shts.)	15.00
_ Curtiss B-2 Condor Bomber	(#18-116C, 2 shts.)	15.00
_ Curtiss B-20 Condor Transport	(#18-117C, 2 shts.)	15.00
_ Curtiss F Boat	(#1-1A, 2 shts.)	15.00
_ Curtiss F92 "Sparrowhawk"	(#18-118A, 2 shts.)	15.00
_ Curtiss MF-K-6 "Seagull"	(#AM-37A, 2 shts.)	15.00
_ Curtiss P-36 "Hawk"	(#7-62A, 2 shts.)	15.00
_ Curtiss P-6E "Hawk"	(#5-42A, 2 shts.)	15.00
_ Curtiss PW-8	(#10-79A, 2 shts.)	15.00
_ Curtiss R-6 Racer	(#HS-73A, 2 shts.)	15.00
_ Curtiss SC-1 "Seahawk"	(#1-8A, 2 shts.)	15.00
_ Curtiss SNC-1 "Falcon"	(#AA-65A, 2 shts)	15.00
_ Curtiss SO3C-1 "Seagull"	(#AM-34A, 2 shts.)	15.00
_ Curtiss Twin JN	(#3-21A, 2 shts.)	15.00
_ Curtiss-Cox "Texas Wildcat"	(#2-14B, 2 shts.)	15.00
_ Curtiss-Wright T-32 "Condor"	(#1-6C, 2 shts)	15.00
_ Curtiss-Wright CW-1 "Jr."	(#11-88A, 3 shts.)	16.50
_ Douglas 0-2	(#11-86A, 3 shts.)	16.50
_ Douglas 0-2H	(#11-87A, 2 shts.)	15.00
_ Douglas 0-38	(#12-92A, 2 shts.)	15.00
_ Douglas 0-38E	(#12-93A, 2 shts.)	15.00
_ Douglas M-2	(#14-68A, 2 shts.)	15.00
_ Douglas A-20G "Havoc"	(#15-102D, 6 shts.)	20.00
_ Etrich 1913 Taube	(#TB-105D, 3 shts.)	16.50
_ Fairchild FC-1	(#17-111A, 2 shts.)	15.00
_ Fairchild FC-2	(#17-112A, 2 shts.)	15.00
_ Fairchild FC-2W "Stars & Stripes"	(#17-113A, 2 shts.)	15.00
_ Fairchild M-62, PT-19 "Cornell"	(#AA-69A, 2 shts.)	15.00
_ Fokker T.5 Netherlands Bomber	(#AA-61C, 2 shts.)	15.00
_ Gallaudet D-1	(#3-20A, 2 shts.)	15.00
_ General Aviation Clark GA-43	(#13-95D, 2 shts.)	15.00
_ Grumman F-11F-1 "Tiger"	(#2-19D, 2 shts.)	15.00
_ Grumman FF-1	(#AA-77A, 2 shts.)	15.00
_ Grumman G-44 "Widgeon"	(#AM5-30A, 2 shts.)	15.00
_ Grumman J2F-5 "Duck"	(#6-53A, 3 shts.)	16.50

VOLUME 2 CONTENTS:

		RETAIL PRICE
_ Heath LNB-4 Parasol	(#4-35B, 2 shts.)	15.00
_ Howard DGA-15P	(#AM-52A, 2 shts.)	15.00
_ Howard DGA-3 "Pete"	(#12-89A, 2 shts.)	15.00
_ Howard DGA-4 "Mike"	(#13-90A, 2 shts.)	15.00
_ Howard DGA-5 "Ike"	(#13-91A, 2 shts.)	15.00
_ Howard DGA-6 "Mr. Mulligan"	(#14-99A, 3 shts.)	16.50
_ Hughes 1B Longwing Racer	(#16-108A, 3 shts.)	16.50
_ Hughes 1B Shortwing Racer	(#16-107A, 3 shts.)	16.50
_ Laird LC-DW-300 "Solution"	(#7-64A, 2 shts.)	15.00
_ Laird LC-DW-500 "Super Solution"	(#8-74A, 2 shts.)	15.00
_ Laird-Turner LTR-14	(#10-83A, 2 shts.)	15.00
_ Lavochkin LA-7	(#AA-46A, 4 shts.)	18.00
_ Lockheed P-80B "Shooting Star"	(#2-10A, 2 shts.)	15.00
_ Lockheed Model 9 "Orion"	(#3-22A, 2 shts.)	15.00
_ Lockheed PV-1 "Ventura"	(#E-101C, 3 shts.)	16.50
_ LWF Cato Model L "Butterfly"	(#10-84A, 2 shts.)	15.00
_ LWF Model G-2	(#2-13A, 2 shts.)	15.00
_ LWF Model H-1 "Owl"	(#11-85C, 2 shts.)	15.00
_ Martin BM-1 and 2	(#1-5A, 2 shts.)	15.00
_ Martin T4M-1, Great Lakes TG-1	(#4-29D, 2 shts.)	15.00
_ Martin TT, 1913 Trainer	(#5-40A, 2 shts.)	15.00
_ Messerschmitt Me 109 E-3	(#AA-75A, 2 shts.)	15.00
_ Morehouse 2 Cyl. Aero Engine	(#3-27E, 1 sht.)	8.00
_ Navy-Wright NW-1 Mystery Racer	(#4-31A, 2 shts.)	15.00
_ Navy-Wright NW-2 Mystery Racer	(#4-32A, 2 shts.)	15.00
_ North American 0-47A	(#13-98A, 3 shts.)	16.50
_ North American AT-6D "Texan"	(#16-106A, 3 shts.)	16.50
_ North American XB-70-1 "Valkyrie"	(#7-66G, 3 shts.)	16.50
_ Packard-Le Pere LUSAC-11	(#1-3A, 2 shts.)	15.00
_ Pfitzner 1910 Monoplane	(#2-11A, 2 shts.)	15.00
_ Piper J-3 "Cub"	(#18-121A, 2 shts.)	15.00
_ Piper J-4 "Cub Coupe"	(#18-122A, 2 shts.)	15.00
_ Piper PA-12 "Super Cruiser"	(#4-36A, 2 shts.)	15.00
_ Republic RC-3 Seabee	(#16-109A, 3 shts.)	16.50
_ Rover Inverted Aero Engine	(#5-45F, 1 sht.)	12.00
_ Ryan B-5 "Brougham"	(#RB-96A, 2 shts.)	15.00
_ Ryan FR-1 "Fireball"	(#3-26A, 2 shts.)	15.00
_ Ryan SCW Low Wing	(#AM9-49A, 2 shts.)	15.00
_ Ryan ST-A	(#9-76A, 2 shts.)	15.00
_ Seversky BT-8	(#3-23A, 2 shts.)	15.00
_ Seversky P-35	(#AA-57A, 2 shts.)	15.00
_ Sikorsky S-39B	(#14-100A, 5 shts.)	18.50
_ Standard J-1	(#17-110A, 2 shts.)	15.00
_ Taylor E-2 "Cub"	(#18-119A, 2 shts.)	15.00
_ Taylor J-2 "Cub"	(#18-120A, 2 shts.)	15.00
_ Thomas-Boeing MB-3A and Thomas-Morse MB-3	(#4-28B, 2 shts.)	15.00
_ Timm TC-170 "Collegiate"	(#8-72A, 2 shts.)	15.00
_ Verville R-3 Racer	(#6-58A, 2 shts.)	15.00
_ Vought F4U-1 "Corsair"	(#AA-51A, 3 shts.)	16.50
_ Vought SBU-1	(#3-24A, 2 shts.)	15.00
_ Vought XF5U	(#8-70A, 3 shts.)	16.50
_ Vultee V-1A Transport	(#2-16A, 2 shts.)	15.00
_ Waco UMF/YMF-5	(#13-97A, 3 shts.)	16.50
_ Waco UPF-7	(#8-67A, 2 shts.)	15.00
_ Waco YKS-6 Cabin	.(#2-17A, 2 shts.)	15.00
_ Waterman "Arrowbile"	(#3-25A, 2 shts.)	15.00
_ Waterman "Gosling" Racer	(#1-4B, 2 shts.)	15.00
_ Wright F2W-1 Racer	(#5-43A, 2 shts.)	15.00
_ Wright F2W-2 Racer	(#5-44A, 2 shts.)	15.00
_ Wright Brothers 1903 Flyer	(#0-123A, 2 shts.)	15.00
_ Wright-Martin V	(#1-2A, 2 shts.)	15.00

All of Paul Matt Drawings are soon to be released on "CD" in TIFF and PCX Format! Reserve your copy Today!! The Paul Matt Scale Drawings listed on this page are all being compiled for the first time on CD-ROM in IBM compatible TIFF and PCX formats especially for the CAD modeler. You can have ALL of these ***internationally acclaimed*** drawings on one CD for an incredibly low price! 522 Files available (261 TIFF & 261 PCX)
Cat. No. WS-PMCD-1.....***NEW***.....$99.95 + $3.95 SHIPPING